Schutzvermerk nach DIN34 beachten

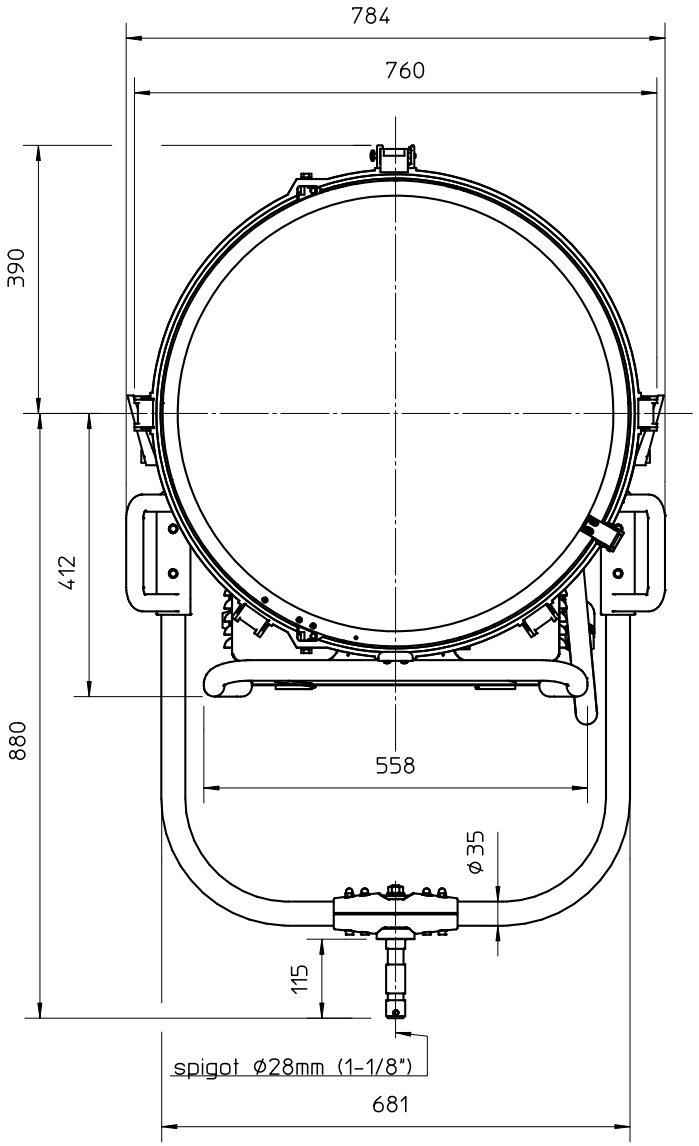


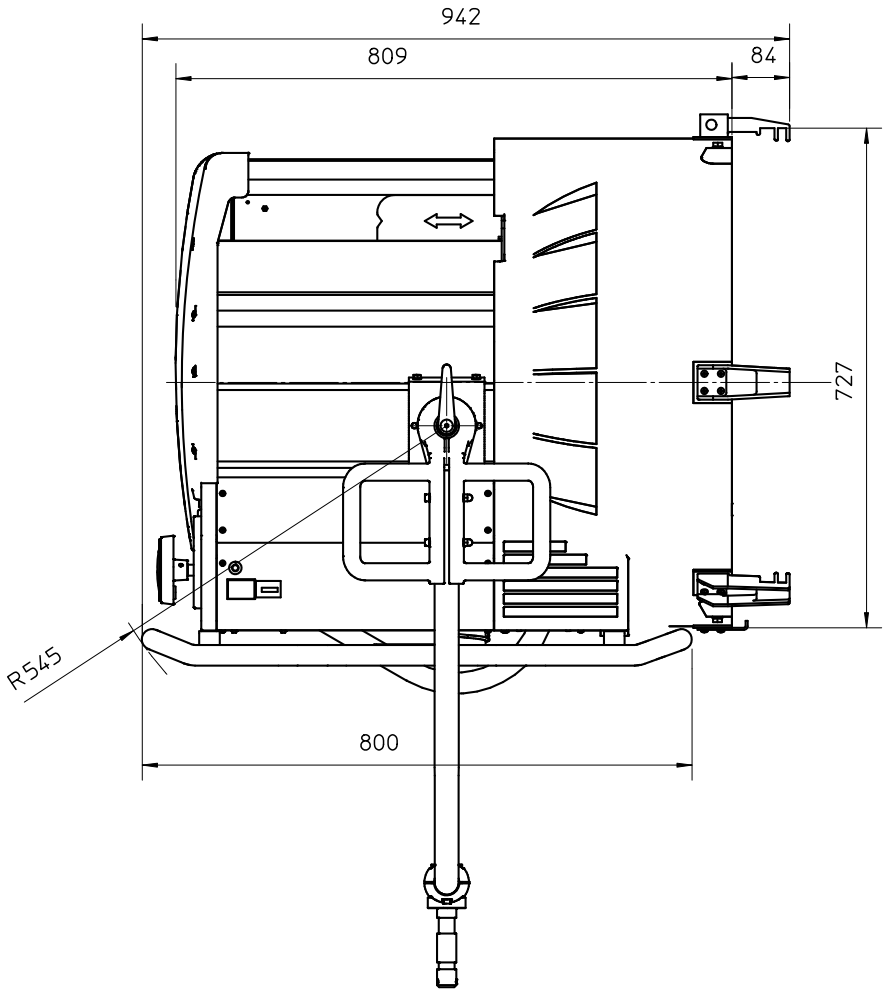


| | | | | | | | |
|---|---|---|---|---|---|---|---|
| Scheinwerfertyp<br>type of lamphead | ARRIMAX 18/12 | Frontscheibe<br>front screen | ∅ 646mm<br>∅ 25,4 " | Packmass<br>packed size | 1170x1050x1135 mm<br>46,06x41,33x44,68 " | Gewicht<br>net weight | 65 kg<br>143,2 lbs |
| Leuchtmittel<br>lamp | HMI 18000W/SE<br>HMI 12000W/SE | Zubehoer<br>accessories | ∅ 740 mm<br>∅ 29 " | Packvolumen<br>packed volume | 1394,34 l<br>49,240 ft3 | Dateiname<br>file name | AM24_18_mb_03 |
| Lampensockel<br>lamp base | G38/G51 | Fluegeltor<br>barndoor | ∅ 740 mm<br>∅ 29 " | Packgewicht<br>packed weight | 110 kg<br>242,5 lbs | Version / Stand<br>version / as at... | 1.2/15.02.11 |

ARRI

Arnold & Richter Cine Technik
Pulvermuehle
D-83071 Stephanskirchen