ARRI Clearance Sale
Price List - EU 2026-11

Analog Camera
Multicam System (AMIRA)
ALEXA 35
ALEXA Mini LF
ALEXA Mini
AMIRA
ALEXA
Storage Media
Lenses
Camera Stabilizer Systems
Pro Camera Accessories









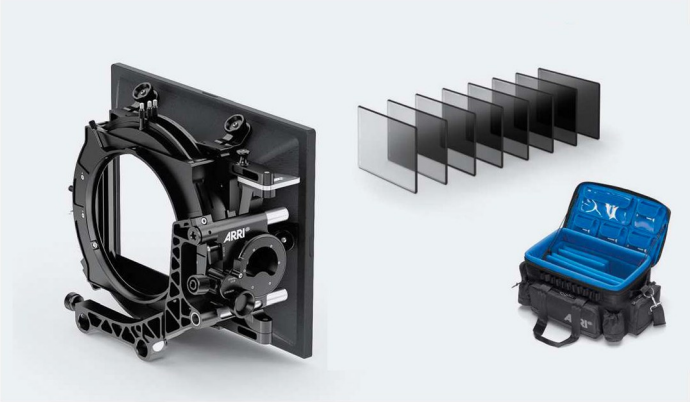

TABLE OF CONTENTS

Analog Camera

ARRIFLEX 416 Accessories 6
Viewfinder 6
Studio Magazines 6

Multicam System (AMIRA)

AMIRA Camera Sets 7
Multicam Components 7
Cases 10
Monitors 10

ALEXA 35

Battery Adapters 11
Accessory Sets 11
ALEXA 35 & ALEXA 35 Xtreme Specific Mechanical Accessories 12
Monitors 13

ALEXA Mini LF

Raincovers 14

ALEXA Mini

Battery Adapters 15
Electronic Viewfinders and Accessories 15
Monitors 16
Viewfinder Cables 16
Non-ECS Cables 16
ALEXA Mini Camera Specific Support Systems 16
Support Rods 19 mm 18

AMIRA

Battery Adapters 19
Electronic Viewfinders and Accessories 19
Viewfinder Cables 20
Power Supplies and Power Cables 20
Non-ECS Cables 20
AMIRA Camera Specific Support Systems 20

ALEXA

Battery Adapters 22
ALEXA Full Spectrum Neutral Density (FSND) Filters 22
Electronic Viewfinders and Accessories 23
Optical Viewfinders and Accessories 23

All sales are subject to our General Sale and Delivery Terms and Conditions for Merchants dated 01.01.2006
Prices, specifications and technical data contained herein are subject to change without notice
Terms of delivery: Ex factory Munich, packing, shipping and insurance charges not included. VAT not included
Export of all ARRI products to other countries only with ARRI's previous consent in writing
All clearance offers are valid while supplies last
Effective 2026-11-01 . All previous price lists are obsolete

Technical Data are subject to change without notice

TABLE OF CONTENTS

Ground Glasses and Frameglow Masks 24
Viewfinder 24
Non-ECS Cables 24
ALEXA Camera Specific Support Systems 25

Storage Media

CODEX SXR Capture Drives 26
Cfast 2.0 Media 26

Lenses

ARRI Signature Zoom Lenses 27
ARRI Impression V Filters 27
ARRI Master Anamorphic 27
ARRI Master Anamorphic Flare Set 27
ARRI Master Prime 29
ARRI Ultra Prime 30
ARRI Alura Zoom 34
ARRI Full Spectrum Neutral Density Filter 35

Camera Stabilizer Systems

CSS Dovetail Plates 37

Pro Camera Accessories

Accessories for Wireless Video System 38
Left Hander Focus Rings for Hi-5 and Hi-5 SX 39
Reversed Focus Rings for Hi-5 and Hi-5 SX 40
CAM Cables for RIA-1 and cforce mini RF 42
Cables for RIA-1 43
Wireless Compact Unit WCU-4 43
Single Axis Unit SXU-1 44
Accessories for WCU-4 and SXU-1 Hand Units 44
Master Grips 45
Operator Control Unit OCU-1 45
Universal Motor Controller UMC-4 45
Mini Motor Controllers 47
Controlled Lens Motor CLM-3 49
Controlled Lens Motor CLM-4 51
Controlled Lens Motor CLM-5 52
Active Lens Motor cforce plus 52
Accessories for CLM-4 and cforce plus Motors 53
LCUBE converters 53

All sales are subject to our General Sale and Delivery Terms and Conditions for Merchants dated 01.01.2006
Prices, specifications and technical data contained herein are subject to change without notice
Terms of delivery: Ex factory Munich, packing, shipping and insurance charges not included. VAT not included
Export of all ARRI products to other countries only with ARRI's previous consent in writing
All clearance offers are valid while supplies last
Effective 2026-11-01 . All previous price lists are obsolete

Technical Data are subject to change without notice

TABLE OF CONTENTS

LBUS Cables	54
LCS Cables	55
Ultrasonic Distance Measure UDM-1	55
Accessories for Lens Data System	57
ECS Power Cables	57
ECS Miscellaneous	58
Support for Canon EOS C200	59
Support for Canon EOS C300 MkII	59
Support for Canon EOS C300MkIII/ C500 MkII	60
Support for Canon EOS C400	60
Support for Canon EOS C700	61
Support for Fujifilm GFX Eterna 55	61
Support for Panasonic AU-EVA1	62
Support for RED DSMC2	63
Support for Sony BURANO	63
Support for Sony Venice	64
Support for Sony Venice Extension Unit 1/2	65
Support for Sony FS7II/FX9	66
Support for Sony PMW F5/F55	66
Bridge Plates	67
Bottom Dovetail Plates	67
Quick Release Baseplates	67
Lens Support	68
Top Handle Support	68
Handgrips and Shoulder Support	69
Recorder/Battery Bracket	71
Support Rods 15 mm	71
Support Rods 19 mm	71
Mounting Hardware	72
Electronic Viewfinder Brackets and Sets	74
Eyepiece Leveller	75
Studio Follow Focus FF-4	75
Focus Knobs	76
Marking Disks for Follow Focus	76
Follow Focus Accessories	77
Follow Focus Gears	77
Mini Matte Box MMB-2	77

All sales are subject to our General Sale and Delivery Terms and Conditions for Merchants dated 01.01.2006
Prices, specifications and technical data contained herein are subject to change without notice
Terms of delivery: Ex factory Munich, packing, shipping and insurance charges not included. VAT not included
Export of all ARRI products to other countries only with ARRI's previous consent in writing
All clearance offers are valid while supplies last
Effective 2026-11-01 . All previous price lists are obsolete

Technical Data are subject to change without notice

TABLE OF CONTENTS

Studio Matte Box SMB	78
Production Matte Boxes MB-19	79
Lightweight Matte Box LMB 4x5	79
Lightweight Matte Box Accessories	80
Lightweight Matte Box LMB 6x6	80
Lightweight Matte Box LMB 6x6 Clamp Adapters	81
Diopter Accessories	81
F1 Filter Frames	82
F2 Filter Frames	82
F4 Filter Frames	83
F5 Filter Frames	83
R1 Tilting Filter Rings – for 6 inch Filter (165 mm ring diameter)	84
R1 Filter Rings – for 138 mm Filter (165 mm ring diameter)	84
R1 Filter Rings – for 6 inch Filter (165 mm ring diameter)	85
R2 Large Diameter Wide-Angle (no round filter)	85
R3 Filter Rings – for 4 1/2 inch Filter (128 mm ring diameter)	85
R4 Screw-In Reduction Rings (114 mm to .....mm)	85
R8 Screw-In Reduction Rings (150 mm to .....mm)	86
Adapter Rings	86
MMB-2 Rings	87
Bags	88
Belts	89
Miscellaneous	89

All sales are subject to our General Sale and Delivery Terms and Conditions for Merchants dated 01.01.2006
Prices, specifications and technical data contained herein are subject to change without notice
Terms of delivery: Ex factory Munich, packing, shipping and insurance charges not included. VAT not included
Export of all ARRI products to other countries only with ARRI's previous consent in writing
All clearance offers are valid while supplies last
Effective 2026-11-01 . All previous price lists are obsolete

Technical Data are subject to change without notice

Ident Nr	Product Description	Weight & Dimensions (W × H × D)	Price

Analog Camera

ARRIFLEX 416 Accessories

K2.55033.0 **Bridge Plate BP-416 cpl. 15mm** **€25**

Bridge Plate for ARRIFLEX 416 - 15mm only
(without the Bottom Plate and without rods)

Viewfinder

K2.54004.0 **ARRICAM Studio Viewfinder Zoom Extension** **€1.900**

Extends the distance between viewfinder and eyepiece about 30cm / 11.8 inches. Turning the ring zooms the image from normal size to 2x magnification.



Studio Magazines

K2.54068.0 **ST Magazine case 120m/400ft** **€250**

Transport case for two ARRICAM Studio Magazines 120m/400ft.

K2.54127.0 **ST Magazine adapter** ~~€5.630~~ **€330** NEW PRICE

The Lite Mag to Studio Camera Adapter allows the Lite Shoulder Magazine and the Lite Steadicam Magazine to be mounted on the ARRICAM Studio in back load position. It is mounted to the camera with six screws (use 3mm hex key). A small door facilitates film threading.
Compatibility: Only for ARRICAM Studio.
Does not work on ARRICAM Lite or with Studio magazines.
If used with Lite IVS, the handle of the Lite Mag to Studio Camera Adapter must be taken off, and the Studio Center Handle should replace the Studio Camera Handle.



K2.54139.0 **Dual Port Adapter** ~~€5.360~~ **€360** NEW PRICE

This magazine adapter allows Studio magazines to be mounted on the ARRICAM Studio in top load or in an angled back load position. Magazines can be switched between the two positions without having to switch adapters. With a magazine mounted in top load position, the Dual Port Adapter acts just like the Top Load Adapter. When mounted in the back load position, the magazine is at a 30° angle. That way even the 300m/1000ft magazine will clear the top of a geared head. The Dual Port Adapter is mounted with six screws (use 3mm hex key).
Compatibility: Only for ARRICAM Studio. Does not work on ARRICAM Lite or with Lite magazines.
The port that is not occupied by the magazine is covered with a light tight magazine cover which has a removable carrying handle. Old covers cannot be used since they are not light tight. The Lite or Lite Universal viewfinders can be used with the Dual Port Adapter, but the Lite Frameglow and the Lite IVS cannot, since they interfere with the Dual Port Adapter. Use the Back Load Adapter instead.



Ident Nr	Product Description	Weight & Dimensions (W × H × D)	Price

Multicam System (AMIRA)

AMIRA Camera Sets

K0.0039163 **AMIRA Live 1800 Camera Chain Set**

~~€31.890~~
€19.990
NEW PRICE

Includes:
K2.0039137 1x 1820 12G Amira Live FCA
K2.0038531 1x 1800 AMIRA Live Frame Mount
K2.0022568 1x 1810U-12G SL - 1U Fibre Base Station
K2.0022570 1x 1810 1U FBS Cable Set
K2.0016149 1x 1830-X Control Pod (XLR5S Connector)
K2.0021324 1x Mounting Bracket for 1830-X Control Pod



Multicam Components

K0.0022756 **1800 Set 1U FBS (4x3G&SL12G)**

~~€30.340~~
€18.990
NEW PRICE

Complete HD and UHD fibre transmission system for use with the AMIRA GL, AMIRA, ALEXA Mini and ALEXA Mini LF. For the ALEXA Mini and the ALEXA Mini LF a differnet FCA cable set is required (K2.0048472).
includes:
K2.0013648 1x 1820-12G FCA Fibre Camera Adaptor 12G
K2.0014813 1x 1820 FCA Lemo assembly
K2.0014814 1x 1820 FCA Cable set for AMIRA
K2.0014659 1x 1835 Dual Link 6G Video Input Option
K2.0022568 1x 1810U-12G SL - 1U Fibre Base Station
K2.0022570 1x 1810 1U FBS Cable Set



K2.0013646 **1810 HR30 6pin to 5pin XLR Headset Cable**

~~€150~~
€59
NEW PRICE

Adapter to XLR-5P, female connector. Allows to connect a headset with a dynamic microphone to the 1820 12G FCA.



K2.0013648 **1820-12G FCA Fibre Camera Adaptor 12G**

~~€11.210~~
€4.290
NEW PRICE

Fibre Camera Adapter with V-mount attachment. Supports Power, Ethernet, Intercom (Production and Engineering), Audio, Tally, (Red/Green), TC, RS 422 and RS 4232, HD and UHD fibre transmission on the camera site. Lemo fibre camera cable connector for SMPTE 311.
Usable for AMIRA GL, AMIRA, ALEXA Mini and ALEXA Mini LF.
The following parts are mandatory and need to be ordered separately:
K2.0014659 1835B Dual Link 6G Video Input Option
K2.0014813 FCA Lemo Assembly



K2.0014659 **1835 Dual Link 6G Video Input Option**

~~€2.360~~
€890
NEW PRICE

UHD Option Board for FCA to support dual link 6G for 4K UHD up to 60p.
Mandatory for K2.0013648 1820-12G FCA Fibre Camera Adaptor 12G



Ident Nr	Product Description	Weight & Dimensions (W × H × D)	Price
K2.0014813	**1820 FCA Lemo assembly**		~~€510~~ **€269** NEW PRICE
	SMPTE 311 Lemo connector for 1820-12G FCA Fibre Camera Adaptor 12G, K2.0013648. Mandatory for K2.0013648 18209-12G FCA Fiber Camera Adaptor 12G		
K2.0014814	**1820 FCA Cable set for AMIRA**		~~€320~~ **€89** NEW PRICE
	Cable set to connect the AMIRA or AMIRA GL with the 1820-12G FCA Fibre Camera Adaptor 12G. Cable set includes: 1x SDI return video 2x SDI out 1x Monitor out 1x Time code 1x Ethernet		
K2.0016149	**1830-X Control Pod (XLR5S Connector)**		~~€480~~ **€189** NEW PRICE
	The Control Pod allows Intercom Volume adjustment, remote activation of intercom PGM Audio, ENG & PD Channels and Return Video. The XLR-5S female connector allows a standard headset with dynamic microphone to be connected through the pod to the 1820 12G FCA or Amira Live FCA.		
K2.0021324	**Mounting Bracket for 1830-X Control Pod**	129 g · 81 × 83 × 22 mm	~~€150~~ **€59** NEW PRICE
	Allows the 1830 Cord Control Pod to be attached to a pan bar up to diameter 35mm		
K2.0022568	**1810U-12G SL - 1U Fibre Base Station**		~~€15.420~~ **€5.790** NEW PRICE
	Full slot, 1U high, 19" rack mount Fibre Base Station Supports Power, Ethernet, Intercom (Production and Engineering), Audio, Tally (Red/Green), TC, RS 422 and RS4232, HD and UHD fibre transmission up to 2km. 3G SDI, 6G SDI, Dual 6G SDI and 12G SL SDI Output. Lemo fibre camera cable connector for SMPTE 311. Usable for AMIRA GL, AMIRA, ALEXA Mini and ALEXA Mini LF Includes Ethernet Protocol Interface (ERI) for direct use of a Sony RCP 1500		
K2.0022570	**1810 1U FBS Cable Set**		~~€520~~ **€189** NEW PRICE
	1x Breakout Cable which provides connection for Red Tally and Green Tally IN at the FBS 1810 1U Fibre-Basestation. Length: 50cm 1x D-sub 9P, Male to 2x XLR 3P, Female (Red Tally and Green Tally IN) 1x Breakout Cable which provides connection for Intercom Production and Engineering IN/OUT at the FBS 1810 1U Fibre-Basestation. Length: 50cm 1x D-sub 15P, Female to 2x XLR 3P, Female (Production/Engineering IN) and 2x XLR 3P, Male (Production / Engineering OUT)		

Ident Nr	Product Description	Weight & Dimensions (W × H × D)	Price
K2.0023813	**Viewfinder Monitor Multicam VMM-1**		~~€6.440~~ **€2.590** NEW PRICE
	The 10 inch LCD monitor connects directly to the camera viewfinder interface or can be daisy chained with the CCP-1. It has controls for Contrast, Color, Backlight and Peaking, a physical On/Off switch for the frontside tally and two camera user buttons. It includes a standard sunshade K2.0037711 1x VMM-1 Power Cable 0.4m (16 inch) K2.0012223 1x AMIRA to CCP-1 Cable 0.75m/29in K2.0009336 1x Cable ALEXA Mini to CCP-1 0,75m/29in		
K2.0037636	**Monitor Yoke Support MYS-1**		~~€1.350~~ **€579** NEW PRICE
	The Monitor Yoke Support MYS-1 is designed to support the ARRI Viewfinder Monitor Multicam VMM-1. It offers adjustments in four axis, including one assisted with counter balance. The MYS-1 can be mounted to the top of the AMIRA handle or other ARRI Cameras.		
K2.0037711	**VMM-1 Power Cable 0.4m (16 inch)**		~~€130~~ **€49** NEW PRICE
	Power cable to connect the VMM-1 to the AMIRA Lemo power output		
K2.0038531	**1800 AMIRA Live Frame Mount**		~~€980~~ **€389** NEW PRICE
	Frame mount required to attach the 1820 FCA Live to the AMIRA Live camera body. This part is included in the AMIRA Live Camera Chain Set.		
K2.0039137	**1820 12G Amira Live FCA**		~~€14.340~~ **€5.490** NEW PRICE
	Fiber Camera Adaptor 1820 12G Amira Live FCA as part of the AMIRA Live. Supports Power, Ethernet, Intercom (Production and Engineering), Audio, Tally (Red/Green), TC, RS 422 and RS4232, HD and UHD fibre transmission on the camera site. Lemo fibre camera cable connector for SMPTE 311. Set includes the camera connection, Dual 6G option and the Lemo connector K2.0038531 1800 AMIRA Live frame mount is not included but part of the camera chain sets K0.0039163 or K0.0040150. FCA cable set is not needed		
K2.0041502	**FBS 1810 Remote Tally Cable**		~~€130~~ **€49** NEW PRICE
	Breakoutcable wich provides Red Tally and Green Tally OUT at the FBS 1810 1U Fibre-Basestation. Length: 50cm 1x D-sub 15P, Male to 2x XLR 3P, Male (Red Tally and Green Tally OUT)		

Ident Nr	Product Description	Weight & Dimensions (W × H × D)	Price

Cases

K2.0051793	**ALEXA 35 Live & Accessories Case**	16000 g · 586 × 810 × 388 mm	~~€1.150~~ **€649** NEW PRICE



K2.0051794	**LPS-1 Fiber Base Station & RCP Case**	16000 g · 586 × 810 × 388 mm	~~€1.150~~ **€649** NEW PRICE



Monitors

K2.0051078	**Monitor Yoke Support MYS-1L (for CCM-1)**	1680 g · 280 × 450 × 200 mm	~~€2.650~~ **€1.099** NEW PRICE

The Monitor Yoke Support MYS-1L supports the ARRI Camera Control Monitor CCM-1, and allows for counterbalanced, four-axis adjustment of the monitor.



KK.0051229	**CCM-1 for Live Production Set**	4100 g · 420 × 310 × 210 mm	~~€7.330~~ **€4.039** NEW PRICE

The CCM-1 for Live Production Set offers a compact monitoring solution for the ALEXA 35 Live system. The set includes the 7-inch Camera Control Monitor CCM-1 with up to 1300 nit brightness, which can be connected with a single cable to the ARRI VF viewfinder connector for picture and camera control. It offers touchscreen and hardware button controls for quick and convenient adjustment of camera settings.

This set includes two VF cables, an optional power cable for high brightness output, a screen protector, a sunshade which doubles as a screen protector and a robust monitor yoke support.

Includes:
K2.0048523 1x CCM-1 with Foldable Sunhood, Screen Protector
K2.0051078 1x Monitor Yoke Support MYS-1L (for CCM-1)
K2.0023943 2x Cable VF (0.5m/1.5ft)
K2.0001637 1x Cable RS - RS/PWR IN (0.5m/1.6ft)

Note:
The CCM-1 monitor can also be used for ALEXA Mini LF (via SDI+Eth), ALEXA 35/35 Xtreme without LPS-1 and the ALEXA 265.



Ident Nr	Product Description	Weight & Dimensions (W × H × D)	Price

ALEXA 35

Battery Adapters

K2.0034204 **Battery Adapter Back BAB-LF**

~~€780~~
€430
NEW PRICE

A battery adapter that attaches to the back of the ALEXA 35 Xtreme, ALEXA 35 or ALEXA 35 Live and accepts any 24 V power solution that can attach to the back of the ALEXA LF. The BAB-LF can also be mounted to the Power Distribution Module PDM-1 or the Audio Expansion Module AEM-1 when one of them is mounted to the back of the camera. Please note: Using voltage boosters for 12 V batteries (including ARRI BAB-HG - K2.0019456 and BAB-HV - K2.0019453) on the BAB-LF is not recommended, as they can run very hot.



Accessory Sets

KK.0041538 **Lightweight Support Set - Side** 460 g · 240 × 165 × 65 mm

~~€750~~
€510
NEW PRICE

This set contains the support components in the ALEXA 35 Lightweight Set (K0.0041722) that attach to the camera's side.

includes:
K2.0033571 1x Camera Side Bracket CSB-1R
K2.0033573 1x Camera Side Bracket CSB-1L
K2.0034189 1x Camera Side Bracket CSB-1R Extension
K2.0023907 1x Rod Mounting Bracket RMB-7



KK.0050890 **Production Bottom Set LW (19mm)** 2154 g · 300 × 120 × 360 mm

~~€1.700~~
€1.190
NEW PRICE

This set includes the lightweight Compact Bridge Plate CBP-5LW and a 300mm Bottom Dovetail Plate. The CBP-5LW fits to ALEXA 35 Xtreme, ALEXA 35 and ALEXA 35 Live with BUD-1 base and ALEXA Mini/Mini LF with the BUD-3.

Includes:
K2.0049300 1x Compact Bridge Plate CBP-5LW (19mm)
K2.0015896 1x Bottom Dovetail Plate 300mm/12in



KK.0050891 **Production Bottom Set LW (15mm)** 2154 g · 300 × 120 × 360 mm

~~€1.700~~
€1.190
NEW PRICE

This set includes the lightweight Compact Bridge Plate CBP-6LW and a 300mm Bottom Dovetail Plate. The CBP-5LW fits to ALEXA 35 Xtreme, ALEXA 35 and ALEXA 35 Live with BUD-1 base and ALEXA Mini/Mini LF with the BUD-3.

Includes:
K2.0049301 1x Compact Bridge Plate CBP-6LW (15mm)
K2.0015896 1x Bottom Dovetail Plate 300mm/12in



KK.0051232 **ALEXA 35 Multicam Support Set** 6000 g · 390 × 130 × 520 mm

~~€3.040~~
€1.950
NEW PRICE

The Multicam Support Set for ALEXA 35 Live comprises of the innovative ARRI Touchdown system and the live production camera handle LPH-1 designed to support monitor systems in live production environments.

includes:
K2.0049959 1x Touchdown Base Plate TBP-1
K2.0049960 1x Touchdown Receiver Plate TRP-1
K2.0050634 1x Live Production Handle LPH-1



Ident Nr	Product Description	Weight & Dimensions (W × H × D)	Price

ALEXA 35 & ALEXA 35 Xtreme Specific Mechanical Accessories

K2.0034183	**Rear Accessory Bracket RAB-2**		~~€370~~ **€240** NEW PRICE
	The Rear Accessory Bracket RAB-2 allows accessories to be mounted behind the ALEXA 35 Xtreme or ALEXA 35. This can be done for organizational reasons or to better balance the camera. It requires the Top Extension Bracket TEB-1 to be attached to the top of the camera, and the Balance Utility Dovetail BUD-1 to be attached to the bottom of the camera.		
K2.0043666	**Vertical Top Plate**		~~€260~~ **€190** NEW PRICE
	The Vertical Top Plate attaches to the ALEXA 35 Xtreme's or ALEXA 35's left side and acts as a top plate to support the Lightweight Camera Handle LCH-1.		
K2.0049215	**Rear Accessory Bracket RAB-3**		~~€260~~ **€160** NEW PRICE
	The RAB-3 is a rear accessory bracket for ALEXA Mini LF optimized for the new utility base BUD-3. Note a classic RAB-1 for ALEXA Mini LF can be turned in to a RAB-3 by removing the lower end of the RAB-1 in order to connect direct to the RAB-1.		
K2.0039405	**Stabilizer Adapter Mount SAM-6 450mm/18in**		~~€510~~ **€430** NEW PRICE
	The Stabilizer Adapter Mount SAM-6 450 mm/18 in. is a long, low-profile sliding dove tail plate that connects the ALEXA 35 Xtreme or ALEXA 35 to ARRI CSS products such as 360 EVO, SRH-3 and SRH-360 and supports long camera builds.		
K2.0048425	**Stabilizer Adapter Mount SAM-6 355mm/14in**		~~€470~~ **€375** NEW PRICE
	The SAM-6 355mm is well-suited to medium sized camera set-ups such as ALEXA 35 Xtrem or ALEXA 35 with a 24-75mm Signature Zoom. Lenses can be supported by the compact lens support CLS-1 and the plate is compatible to ARRI MAXIMA, TRINITY 1 & 2, Artemis 2, 360 EVO, SRH-3 and SRH-360.		

Ident Nr	Product Description	Weight & Dimensions (W × H × D)	Price

Monitors

K2.0048523 **CCM-1 with Foldable Sunhood, Screen Protector**

~~€4.200~~
€2.699
NEW PRICE

The Camera Control Monitor CCM-1 is a 7-inch screen monitor with up to 1300 nit brightness for use on ALEXA Mini LF, ALEXA 35/35 Xtreme and ALEXA 265 cameras. It can be connected to the ARRI VF viewfinder connector or SDI+Ethernet for picture and camera control.
The CCM-1 offers touchscreen and hardware button controls for quick and convenient adjustment of camera settings.



Includes:
K2.0048523 1x CCM-1 with Foldable Sunhood, Screen Protector
K2.0001637 1x Cable RS - RS/PWR IN (0.5m/1.6ft)
1x CCM-1 Protective Pouch

K2.0048983 **CCM-1 Foldable Sunhood**

~~€230~~
€140
NEW PRICE

This foldable sunhood for the Camera Control Monitor CCM-1 can be mounted to the CCM-1 without any tools, the side flaps and the top flap hold together magnetically. The outside material is strong and durable, the inside microfiber material protects the display and prevents reflections. The sunhood protects the display of the CCM-1 even when folded.



Only compatible with the Camera Control Monitor CCM-1 and no other monitors.

KK.0048851 **Camera Control Monitor CCM-1 Set**

~~€4.950~~
€3.399
NEW PRICE

The Camera Control Monitor CCM-1 is a 7-inch screen monitor with up to 1300 nit brightness for use on ALEXA Mini LF, ALEXA 35/35 Xtreme and ALEXA 265 cameras. It can be connected to the ARRI VF viewfinder connector or SDI+Ethernet for picture and camera control. It offers touchscreen controls and hardware buttons for quick and convenient adjustment of camera settings.



This set includes everything you need to get started with an ALEXA 35. VF cable, power cable for high brightness output, a screen protector, a sunshade which doubles as a screen protector during transport and the super-robust MAC-1 monitor mount.

includes:
K2.0048523 1x CCM-1 with Foldable Sunhood, Screen Protector
K2.0048394 1x Monitor Arm for Camera MAC-1
K2.0023943 1x Cable VF (0.5m/1.5ft)
K2.0001637 1x Cable RS - RS/PWR IN (0.5m/1.6ft)
1x CCM-1 Protective Pouch

Find out more on our website at www.arri.com/CCM-1

Ident Nr	Product Description	Weight & Dimensions (W × H × D)	Price

ALEXA Mini LF

Raincovers

K2.0036013	**Wetsuit for ALEXA Mini LF**	550 g	~~€310~~ **€230** NEW PRICE

The camRade wetSuit for ALEXA Mini/ Mini LF is a rain cover that protects your camera against the elements. It is made of water-resistant fabric with a soft lining and minimalizes unwanted sound effects during operation.



Ident Nr	Product Description	Weight & Dimensions (W × H × D)	Price

ALEXA Mini

Battery Adapters

K2.0014533 **Gold Mount Adapter Plate MkII** — 340 g · 82 × 142 × 21 mm — ~~€660~~ **€460** NEW PRICE

Solid battery adapter made of aluminum for ALEXA Mini/ Mini LF. The Adapter Plate Mk II features a 8-pin Lemo connector for battery input aimed at cables such the ARRI KC-50 as well as two 2-pin Lemo accessory sockets.



K2.0015865 **Top angled rod bracket 15mm LWS** — ~~€100~~ **€70** NEW PRICE

To mount the V-mount and Gold-mount battery plate with hot-swap buffer (K2.0015840 and K2.0015859) from top-mounted 15mm LWS rods, with a slight angle.

K2.0017223 **Cable XLR4 Smart APU 1.85m (6 inch)** — ~~€100~~ **€70** NEW PRICE

2pin Lemo to 4pin XLR 12V external power cable for V-mount and Gold-mount battery plate with hot-swap buffer (K2.0015840 and K2.0015859).



K2.0024114 **B-Mount Power Splitting Box** — ~~€1.120~~ **€1.085** NEW PRICE

The B-Mount 24V Power Splitting box is a proven battery solution featuring various industry standard 12V and 24V accessory power connectors, as well as a 8-pin Lemo connector for power input aimed at cables such as the ARRI KC-50. A console can be attached to mount the Splitting box to standard 15mm LWS rods. Fits ALEXA Mini / Mini LF. Power from the 8-pin Lemo input of the battery plate is prioritized over the on-board B-Mount 24V input.



Electronic Viewfinders and Accessories

K2.0005861 **ALEXA Mini Viewfinder MVF-1** — ~~€7.900~~ **€2.800** NEW PRICE

ALEXA Mini labeled MVF-1 (AMIRA EVF) and single 75cm viewfinder cable with yellow connector for ALEXA Mini EVF port (K2.0008135).



Ident Nr	Product Description	Weight & Dimensions (W × H × D)	Price

Monitors

K2.0008151	**Camera Control Panel CCP-1**	130 × 860 × 350 mm	~~€3.290~~ **€299** NEW PRICE

The Camera ControPanel CCP-1 is a small control panel that connects to the viewfinder port of ALEXA Mini or AMIRA. It can be used as a control device when no optical viewfinder is required and framing is done via an onboard monitor. It can also be daisy-chained between the MVF-1 viewfinder and the camera to provide a right-hand side control interface, allowing camera controls to be accessed while the operator is framing through the optical viewfinder.
Note: The size of the CCM-1 is not sufficient to pull focus and the cable length will be limited to a couple meters.
Cables have to be ordered seperatly.



Viewfinder Cables

K2.0009336	**Cable ALEXA Mini to CCP-1 0,75m/29in**		~~€180~~ **€40** NEW PRICE

0,75m (29 inch) cable to connect ALEXA Mini to CCP-1. This cable has an ALEXA Mini EVF connector on both ends and does not work with AMIRA.



K2.0009367	**Cable ALEXA Mini to MVF-1 0,5m/19in**		~~€185~~ **€45** NEW PRICE

50cm (19 inch) cable to connect the MVF-1 viewfinder to ALEXA Mini, CCP-1 to MVF-1 or CCP-1 to AMIRA. This cable has an ALEXA Mini EVF connector on one end and an AMIRA EVF connector on the other.



Non-ECS Cables

K2.0009051	**Cable ALEXA Mini EXT to EXT 1,5m/59in**		~~€70~~ **€20** NEW PRICE

1.5m (59 inch) cable designed to be used with the ALEXA Mini and ALEXA Mini LF EXT Sync feature. Connects ALEXA Mini and ALEXA Mini LF cameras to EDB-2 (K2.0013145) or directly to a master ALEXA Mini/ALEXA Mini LF camera (for stereo setups).

ALEXA Mini Camera Specific Support Systems

K2.0006352	**Bridge Plate Adapter BPA-4**	131 g · 120 × 70 × 20 mm	~~€120~~ **€90** NEW PRICE

This spacer allows standard bridge plates to be mounted to the Mini Adapter Plate MAP-2/MAP-2A. The BPA-4 also features centered 3/8 inch and 1/4 inch threads for standard tripod plates. Fits ALEXA Mini/Mini LF.



Ident Nr	Product Description	Weight & Dimensions (W × H × D)	Price
K2.0008408	**Low Bracket for CSP-1**	93 g · 110 × 70 × 40 mm	~~€230~~ **€160** NEW PRICE
	This bracket is designed to optimise handheld camera operating when using a compact baseplate such as the Adapter Plate MAP-2/MAP-2A with ALEXA Mini/Mini LF. For use with bridge plate adapter BPA-4 and most standard 15 mm LWS baseplates for third party cameras, the original CSP-1 rod bracket is required.		
K2.0012692	**Side Accessory Bracket SAB-1**	109 g · 130 × 160 × 30 mm	~~€220~~ **€120** NEW PRICE
	The Side Accessory Bracket fits to the Mini Adapter plates MAP-1 and MAP-2/ MAP-2A, as well as the Broadcast Plate for ALEXA Mini/Mini LF and Compact Bridge Plate CBP-1. The SAB-1 provides standard ARRI 3/8" and ¼" accessories interfaces, as well as attachment points for the Rod Mounting Bracket RMB-3 and Mini Side Brackets MSB-1.		
K2.0014894	**Compact Bridge Plate CBP-1 19mm**		~~€690~~ **€490** NEW PRICE
	The CBP-1 is a baseplate compatible to the ALEXA Mini/ Mini LF. The CBP-1 offers the advantage of a sliding studio bridge plate without the added weight. The quick-release system allows the camera to be attached directly to the balance plate without having to slide the assembly out. For 15mm Studio, see CBP-2.		
K2.0019441	**Compact Bridge Plate CBP-2 15mm**		~~€1.280~~ **€770** NEW PRICE
	The CBP-2 is a baseplate compatible with the ALEXA Mini/ Mini LF. The CBP-2 offers the advantage of a sliding studio bridge plate without the added weight. The quick-release system allows the camera to be attached directly to the balance plate without having to slide the assembly out. For 19mm Studio, see CBP-1		
K2.0023942	**Battery Adapter Plate BAP-2A**	142 g · 17 × 16 × 3 mm	~~€220~~ **€85** NEW PRICE
	The BAP-2A is a side mounted battery plate for ALEXA Mini/Mini LF offering compatibility to the Compact Bridge Plates CBP-1 and CBP-2. The BAP-2A features mounting interfaces to common battery plates, including ARRI Power Splitting Box and Bebob AMICRO and VMICRO		
K2.0033724	**Rod Support Bracket 15mm for CBP**		~~€160~~ **€95** NEW PRICE
	15mm studio rod support for bottom plates, designed to offer support to long rods and avoid flex with heavy lenses. This support bracket is designed for Compact Bridge Plates CBP-2 15mm Studio (ALEXA Mini / ALEXA Mini LF). And CBP-4 15mm Studio (AMIRA). For support with classic Bridge plates BP-9 15mm Studio, please see RSB-15 K2.0000437		

Ident Nr	Product Description	Weight & Dimensions (W × H × D)	Price
K2.0033726	**Rod Support Bracket 19mm for CBP**		~~€160~~ **€95** NEW PRICE
	19mm studio rod support for bottom plates designed to offer support to long rods and avoid flex with heavy lenses. This support bracket is designed for Compact Bridge Plates CBP-1 19mm Studio (ALEXA Mini / ALEXA Mini LF). And CBP-3 19mm Studio (AMIRA). For support with classic Bridge plates BP-8 19mm Studio, please see RSB-19 K2.000440.		
K2.0038970	**Visco Shoulder Pad for CBP**		~~€140~~ **€100** NEW PRICE
	Sharing the exact same shape as its predecessor, the Visco Shoulder Pad offers the same clearance to studio support rods and bring substantial added comfort when filming long days on the shoulder.	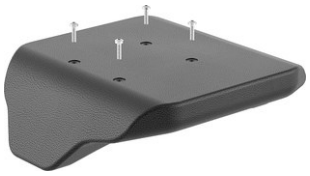	

Support Rods 19 mm

K2.0014960	**Single Support Rod 90mm, 3.5in, 19mm**	40 g · 90 × 20 × 20 mm	~~€35~~ **€25** NEW PRICE
	One single support rod (not pair), 90mm long (3.5in), diameter 19 mm, stainless steel, lightweight		
K2.0014961	**Single Support Rod 150mm, 5.9in, 19mm**	67 g · 150 × 20 × 20 mm	~~€40~~ **€30** NEW PRICE
	One single support rod (not pair), 90mm long (3.5in), diameter 19 mm, stainless steel, lightweight		

Ident Nr	Product Description	Weight & Dimensions (W × H × D)	Price

AMIRA

Battery Adapters

K2.0038614 **B-Mount Adapter BMM-AMIRA**

~~€530~~ **€400** NEW PRICE

The B-Mount adapter allows 24V B-Mount batteries to power all AMIRA models.



K2.75001.0 **AMIRA Gold Mount Battery Adapter Plate**

~~€500~~ **€95** NEW PRICE

Attaches to the back of the AMIRA camera and accepts Gold mount on-board batteries.



K2.75002.0 **AMIRA V-Lock Battery Adapter Plate**

~~€500~~ **€295** NEW PRICE

Attaches to the back of the AMIRA camera and accepts V-lock on-board batteries.



Electronic Viewfinders and Accessories

K2.0001222 **Viewfinder Adapter VFA-2**

~~€30~~ **€20** NEW PRICE

An adapter with an ARRI viewfinder dovetail on one side and one 3/8 inch and one 1/4 inch mounting point on the other side. This adapter can be used to mount the AMIRA or ALEXA viewfinders to ARRI Universal Mounting Arms (UMA) or Noga arms.



K2.0001297 **Viewfinder Attachment Bracket VAB-1**

~~€290~~ **€200** NEW PRICE

An attachment that allows the AMIRA viewfinder to be mounted to two 15 mm lightweight rods above the lens, as can be found on the Universal Adapter Plate UAP-2 (K2.0001221). This bracket is already included in the Universal Adapter Plate UAP-2 Set (K0.0001280).



Ident Nr	Product Description	Weight & Dimensions (W × H × D)	Price

Viewfinder Cables

K2.0007750 **AMIRA Viewfinder Cable Short 0.5m/1.6f feet** ~~€80~~ **€45** NEW PRICE

Connects the AMIRA Viewfinder MVF-1 to the MVF socket on the camera (spare part).



Power Supplies and Power Cables

K2.0001275 **AMIRA Power Cable Coiled** ~~€230~~ **€35** NEW PRICE

Connects the power input of AMIRA, ALEXA Mini or ALEXA Mini LF to a battery power output with an XLR 3 pin connector.



Non-ECS Cables

K2.0012228 **AMIRA to CCP-1 Cable 0.5m/19in** 500 × 15 × 15 mm ~~€180~~ **€30** NEW PRICE

0,5m (19 inch) cable to connect AMIRA to CCP-1.



AMIRA Camera Specific Support Systems

K2.0001221 **Universal Adapter Plate UAP-2** ~~€590~~ **€410** NEW PRICE

The Universal Adapter Plate UAP-2 can be attached to the top and bottom dovetails of the AMIRA. Provides support for regular and low mode Steadicam use and features 15mm LWS rod console at the front.



K2.0003675 **Shoulderpad for WPA-1** ~~€80~~ **€60** NEW PRICE

New, softer shoulderpad for WPA-1, can be exchanged by customer or by service order.



Ident Nr	Product Description	Weight & Dimensions (W × H × D)	Price
K2.0013007	**Rod Mounting Bracket RMB-4**		~~€220~~ **€100** NEW PRICE
	Single rod bracket for 19mm rods (15mm rods with optional insert) mounting to AMIRA body (top/right). Optimized for camera stabilizer systems and lens motors. Compatible with original AMIRA handle and viewfinder bracket.		
K2.0014088	**Side Accessory Bracket SAB-2**	62 g · 60 × 110 × 100 mm	~~€190~~ **€120** NEW PRICE
	Attaches to the side of the AMIRA camera and provides 3/8" and 1/4" threads, as well as M4 threads for ARRI accessories such as the Rod Mounting Bracket RMB-3.		
K2.75000.0	**Wedge Plate Adapter WPA-1**	754 g · 247 × 112 × 56 mm	~~€860~~ **€560** NEW PRICE
	ENG style camera base mount with new softer shoulder pad and wedge plate adapter - 15mm LWS. Compatible with Quick-Release-Plate.		
K2.75006.0	**Bridge Plate Adapter BPA-3**	529 g · 155 × 35 × 234 mm	~~€680~~ **€300** NEW PRICE
	A camera base mount compatible to accessories like BP-8 or BP-9 for 19/15mm rods etc.		

Ident Nr	Product Description	Weight & Dimensions (W × H × D)	Price

ALEXA

Battery Adapters

K2.0019456 **Battery Adapter Back High Load BAB-HG Gold-Mount for ALEXA LF**

~~€810~~ **€570** NEW PRICE

The BAB-HG battery adapter attaches to the back of the ALEXA, ALEXA Plus, ALEXA Plus 4:3, ALEXA M body, ALEXA Studio, ALEXA HD, ALEXA HD Plus, ALEXA XT, ALEXA XT M body, ALEXA XT Plus, ALEXA XT Studio, ALEXA SXT EV, ALEXA SXT Plus, ALEXA SXT Studio, ALEXA SXT W or ALEXA LF and accepts bebob High Load ACINE on-board batteries. The BAB-HG battery adapter has one additional Twist D-tap connector.

Full functionality with ALEXA LF provided from LF SUP 3.0 on.



K2.0038613 **B-Mount Adapter ALEXA BMM-24-ALEX**

~~€530~~ **€410** NEW PRICE

The B-Mount Adapter ALEXA BMM-24-ALEX attaches to the back of the ALEXA, ALEXA Plus, ALEXA Plus 4:3, ALEXA M body, ALEXA Studio, ALEXA HD, ALEXA HD Plus, ALEXA XT, ALEXA XT M body, ALEXA XT Plus, ALEXA XT Studio, ALEXA SXT EV, ALEXA SXT Plus, ALEXA SXT Studio, ALEXA SXT W, ALEXA LF or ALEXA 65 and accepts B-Mount onboard batteries.



K2.72006.0 **Battery Adapter Top for Gold Mount BAT-G**

~~€390~~ **€100** NEW PRICE

Attaches to the top of the ALEXA, ALEXA Plus, ALEXA Plus 4:3, ALEXA M body, ALEXA Studio, ALEXA HD, ALEXA HD Plus, ALEXA XT, ALEXA XT M body, ALEXA XT Plus, ALEXA XT Studio, ALEXA SXT EV, ALEXA SXT Plus, ALEXA SXT Studio or ALEXA SXT W and accepts Gold mount on-board batteries.
Note: This battery plate is not suitable for ALEXA LF cameras.



ALEXA Full Spectrum Neutral Density (FSND) Filters

K2.72137.0 **ALEXA PL S35 FSND Filter Set, Basic**

~~€1.340~~ **€340** NEW PRICE

A filter set for ALEXA S35 cameras with PL lens mounts. The basic filter set includes the IFM Optical Clear, FSND filters 0.6, 1.2 and 1.8, the IFM Shim, the filter insertion tool (the Ground Glass/Frameglow tool K4.52722.0), the IFM/Extenders Depth Gauge DG-1 and a case with space for 8 FSND filters.



K2.72138.0 **ALEXA PL S35 FSND Filter Set, Completion**

~~€1.580~~ **€390** NEW PRICE

A filter set for ALEXA S35 cameras with PL lens mounts. The completion filter set includes FSND 0.3, 0.9, 1.5, 2.1 and 2.4 filters. The content of the Basic set combined with the content of the Completion set equals the content of the Full set.



Ident Nr	Product Description	Weight & Dimensions (W × H × D)	Price
K2.72139.0	**ALEXA PL S35 FSND Filter Set, Full**		~~€2.840~~ **€720** NEW PRICE
	A filter set for ALEXA S35 cameras with PL lens mounts. The full filter set includes the IFM Optical Clear, FSND filters 0.3, 0.6, 0.9, 1.2, 1.5, 1.8, 2.1 and 2.4, the IFM Shim, the filter insertion tool (the Ground Glass/Frameglow tool K4.52722.0), the IFM/Extenders Depth Gauge DG-1 and a case with space for all that stuff.		

Electronic Viewfinders and Accessories

K2.72008.0	**ALEXA Electronic Viewfinder EVF-1**		~~€6.540~~ **€920** NEW PRICE
	Film-style, low latency (≤1 frame delay) electronic color viewfinder with 1280 x 784 F-LCOS micro display (image: 1280 x 720, status bars: 1280 x 32 above and 1280 x 32 below image) and ARRI LED illumination, both temperature controlled. The high-end coated glass optics of the EVF-1 offer high contrast, low distortion and an evenly illuminated viewing area. Image can be flipped for use of viewfinder on camera left or right. Surround view shows an area larger than that being recorded. Displays camera or EVF menus, customizable frame lines, surround view, camera status, Lens Data System info and clip/reel numbers. Control of the basic viewfinder and camera settings through on-screen menu. Compatible with ALEXA Classic cameras, ALEXA Classic cameras with the XR Module upgrade, ALEXA XT cameras, ALEXA SXT cameras and ALEXA LF. ALEXA Classic Studio, Classic Studio with the XR Module upgrade, XT Studio and SXT Studio cameras require the Electronic Viewfinder Adapter EVA-1 (K2.72063.0). Note 1: Not compatible with ALEXA Mini and AMIRA Note 2: Viewfinder and heated eyecup cables can be found in the ALEXA Cables section of this price list.		

Optical Viewfinders and Accessories

K2.54005.0	**ARRICAM Studio Viewfinder Extension Medium**		~~€4.010~~ **€1.900** NEW PRICE
	150 mm viewfinder extension compatible with OVF-1 (with ARRICAM Eyepiece Adapter AEA-1), ARRICAM Studio Viewfinder, ARRICAM Studio Universal Viewfinder, ARRICAM Lite Viewfinder 2 and ARRICAM Lite Universal Viewfinder.		
K2.72049.0	**ARRICAM Eyepiece Adapter AEA-1**		~~€630~~ **€190** NEW PRICE
	With this adapter the Optical Viewfinder OVF-1 can accept the ARRICAM Studio Eyepiece (K2.54003.0) or ARRICAM Studio Viewfinder Extension Medium (K2.54005.0).		
K2.72080.0	**1.3x De-squeeze Module**		~~€3.460~~ **€780** NEW PRICE
	Replaces the 2x De-squeeze Module in the OVF-1 for use with lenses with a 1.3x squeeze ratio.		

Ident Nr	Product Description	Weight & Dimensions (W × H × D)	Price

Ground Glasses and Frameglow Masks

K2.72079.0 **Ground Glass 4:3, Blank, 800**

~~€630~~
€45
NEW PRICE

Ground glass for ALEXA Studio, ALEXA XT Studio or ALEXA SXT Studio in 4:3 mode with no markings. 800 grit surface.



Viewfinder

K2.72048.0 **Optical Universal Viewfinder OVF-1**

~~€17.080~~
€1.100
NEW PRICE

Bright, high contrast optical viewfinder OVF-1 for ALEXA Studio, XT Studio and SXT/SXR Studio for through-the-lens viewing with low distortion, accurate color fidelity and no delay. Rotates to left and right of camera body and telescopes closer/farther from camera body. Automatically keeps an upright image with an optional manual image rotation.
Includes a flip in ND 0.6 contrast filter and de-squeeze optics for 2x anamorphic lenses (1.3x de-squeeze module also available).
Includes Basic Insert Module BIM-1 (K4.72319.0) for RGB frameglow.
Includes camera port cover. Compatible with 8x and 10x 435 eyepieces, 435 eyepiece extensions and all ARRIFLEX and ARRICAM heated eyecups. With the optional ARRICAM Eyepiece Adapter AEA-1 (K2.72049.0), the OVF-1 can accept the 8x ARRICAM Studio eyepiece or ARRICAM Studio Viewfinder Extension Medium. Not compatible with ARRICAM Studio Anamorphic Extension, ARRICAM Studio Viewfinder Zoom Extension and Lite Universal Eyepiece (K4.52734.0). Eyepiece not included. ALEXA Studio ground glasses and frameglow holders are compatible to the ARRICAM system, but only ALEXA Studio ground glasses and glow masks provide exact alignment of framelines and captured frame.
Custom formats (except for Open Gate sensor mode) are available for order through the online ground glass composer. The OVF-1 can be replaced with the ALEXA Electronic Viewfinder EVF-1 by using the Electronic Viewfinder Set for ALEXA Studio (K0.71220.0).



Non-ECS Cables

K2.72033.0 **ALEXA Ethernet - Ethernet Cable (2.0m/6.6ft) KC 156-S**

~~€180~~
€20
NEW PRICE

Connects the Ethernet socket (Lemo 10 pin) on the ALEXA, ALEXA XT and ALEXA SXT family of cameras to the Ethernet socket (Lemo 10 pin) on another ALEXA, ALEXA XT and ALEXA SXT camera in order to synchronize the settings of one camera to another for 3D and other applications. Can be used concurrently with the EXT to EXT Cable (K2.72032.0), which will provide precise sensor and HD output synchronization.



K2.72081.0 **SMPTE Steadicam Cable 5m/16ft**

~~€1.110~~
€369
NEW PRICE

Extremely thin and flexible hybrid fiber/copper cable that carries image data, control data and power. Connects ALEXA M or ALEXA XT M head and body for Steadicam use.



Ident Nr	Product Description	Weight & Dimensions (W × H × D)	Price

ALEXA Camera Specific Support Systems

K2.72007.0	**Center Camera Handle CCH-1**	280 g	~~€350~~ **€140** **NEW PRICE**

Attaches to the top of the ALEXA, ALEXA Plus, ALEXA Plus 4:3, ALEXA M body, ALEXA Studio, ALEXA XT, ALEXA XT M body, ALEXA XT Plus, ALEXA XT Studio, ALEXA SXT EV, ALEXA SXT Plus, ALEXA SXT Studio, ALEXA SXT W or ALEXA LF camera and provides numerous 3/8 inch-16 UNC threaded mounting options.



Ident Nr	Product Description	Weight & Dimensions (W × H × D)	Price

Storage Media

CODEX SXR Capture Drives

K2.0006157	**CODEX SXR Capture Drive 2TB**	200 g · 61 × 16 × 110 mm	~~€4.200~~ **€799** NEW PRICE

SXR Capture Drive 2TB (blue ring) for ALEXA LF, ALEXA SXTW and ALEXA 65.

Recording capacity at 24fps:
ARRIRAW approx. 117min 3.4K; 64min 4.5K;
Apple ProRes 4444 approx. 104 min 16:9 4K UHD

Note:
Only supported by ALEXA LF, ALEXA SXT W and ALEXA 65.
Requires the CODEX SXR Capture Drive adapter (K2.0008429).
CODEX Model No: CDX-37021/20



K2.0006942	**CODEX SXR Capture Drive 1TB**	200 g · 61 × 16 × 110 mm	~~€2.600~~ **€399** NEW PRICE

SXR Capture Drive 1TB (red ring) for ALEXA LF, ALEXA SXTW and ALEXA 65.

Recording capacity at 24fps:
ARRIRAW approx. 58min 3.4K OG, 32min 4.5K OG
Apple ProRes 444 approx. 52 min 16:9 4K UHD

Note:
Only supported by ALEXA LF, ALEXA SXT W and ALEXA 65.
Requires the CODEX SXR Capture Drive adapter (K2.0008429).
CODEX product code: CDX-37019/18



Cfast 2.0 Media

K2.0015640	**SanDisk CFast2.0 card 256GB**	9 g · 43 × 4 × 36 mm	~~€330~~ **€190** NEW PRICE

A professional grade 256 GB CFast 2.0 card. SanDisk CFast 2.0 cards have an extended temperature range below freezing, which makes them a good choice for cold weather conditions.
Recording capacity at 24fps:
approx. 24min ARRIRAW 2.8K; 15min ARRIRAW 3.4K OG; approx. 27min Apple ProRes 4444 16:9 4K UHD

Note: Only supported by ALEXA Mini and AMIRA. This card is not supported by ALEXA XT or ALEXA SXT W. This card is identical to the retail version.
SanDisk Product Code: SDCFSP-256G (D)



K2.0016648	**SanDisk CFast2.0 card 512GB**	9 g · 43 × 4 × 36 mm	~~€780~~ **€680** NEW PRICE

The ARRI edition SanDisk Extreme Pro 512 GB CFast 2.0 card. Professional media with customized firmware for optimum performance in ARRI cameras. SanDisk CFast 2.0 cards have an extended temperature range below freezing, which makes them a good choice for cold weather conditions. The 512 GB card is particularly useful for project shooting at the highest quality settings or to achieve extended recording time with moderate compression.
Recording capacity at 24fps:
approx. 48 min ARRIRAW 2.8K; 30 min ARRIRAW 3.4K OG
; approx. 54 min Apple ProRes 4444 16:9 4K UHD

Note: Only supported by ALEXA Mini and AMIRA. This card is not supported by ALEXA XT or ALEXA SXT W. Note that the firmware of standard 512GB SanDisc Cfast 2.0 cards are not compatible with our cameras.
SanDisk Product Code: SDCFSP-512 (A and B)

Important Note: Retail 512 GB SanDisk Extreme PRO CFast 2.0 cards are not supported by ARRI cameras.



Ident Nr	Product Description	Weight & Dimensions (W × H × D)	Price

Lenses

ARRI Signature Zoom Lenses

KK.0038609	**ARRI Signature Zoom Extender 1.7x**	600 g	~~€5.900~~ **€2.600** NEW PRICE

Compatible with ARRI Signature Zoom 65-300mm and Signature Prime 280mm.
SZ 65-300/T2.8 & Extender 1.7x --> 110-510/T4.9
SP 280/T2.8 & Extender 1.7x --> 480/T4.9



ARRI Impression V Filters

K2.0048148	**ARRI Impression V Velcro® Pack**	640 g · 290 × 60 × 120 mm	~~€150~~ **€10** NEW PRICE

The ARRI Impression V Velcro® Pack provides additional ARRI Impression V Velcro® Sets. One Impression V Velcro® Set contains 12 velcro® tabs.
Includes:
6x ARRI Impression V Velcro® Set



ARRI Master Anamorphic

K2.47947.0	**ARRI Master Anamorphic 100/T1.9 F**	3100 g	~~€25.140~~ **€14.000** NEW PRICE



ARRI Master Anamorphic Flare Set

K2.0006794	**ARRI Master Anamorphic Flare Set Toolkit**	285 g	~~€414~~ **€100** NEW PRICE

compatible with all seven flare sets



K2.0006796	**ARRI Master Anamorphic Flare Set MA35**		~~€3.540~~ **€100** NEW PRICE



Ident Nr	Product Description	Weight & Dimensions (W × H × D)	Price
K2.0006798	**ARRI Master Anamorphic Flare Set MA40**	1520 g	~~€3.540~~ **€100** NEW PRICE
			
K2.0006799	**ARRI Master Anamorphic Flare Set MA50**	1440 g	~~€3.540~~ **€100** NEW PRICE
			
K2.0006800	**ARRI Master Anamorphic Flare Set MA60**	1470 g	~~€3.540~~ **€100** NEW PRICE
			
K2.0006801	**ARRI Master Anamorphic Flare Set MA75**	1450 g	~~€3.540~~ **€100** NEW PRICE
			
K2.0006802	**ARRI Master Anamorphic Flare Set MA100**	1480 g	~~€3.540~~ **€100** NEW PRICE
			
K2.0006803	**ARRI Master Anamorphic Flare Set MA135**	1794 g	~~€3.540~~ **€100** NEW PRICE
			

Ident Nr	Product Description	Weight & Dimensions (W × H × D)	Price
K2.0012679	**ARRI Master Anamorphic Flare Set MA28**	1510 g	~~€3.900~~ **€100** NEW PRICE
			
K2.0014729	**ARRI Master Anamorphic Flare Set MA180**	1150 g	~~€3.540~~ **€100** NEW PRICE
			

ARRI Master Prime

K2.47605.0	**ARRI Master Prime 32/T1.3 M**	2300 g	~~€12.595~~ **€7.000** NEW PRICE
			
K2.47608.0	**ARRI Master Prime 50/T1.3 M**	2700 g	~~€13.695~~ **€5.400** NEW PRICE
			
K2.47619.0	**ARRI Master Prime 135/T1.3 M**	2800 g	~~€16.995~~ **€7.000** NEW PRICE
			
K2.47701.0	**ARRI Master Prime 18/T1.3 F**	2200 g	~~€13.695~~ **€5.400** NEW PRICE
			

Ident Nr	Product Description	Weight & Dimensions (W × H × D)	Price
K2.47704.0	**ARRI Master Prime 27/T1.3 F**	2200 g	~~€12.595~~ **€5.500** NEW PRICE
			
K2.47705.0	**ARRI Master Prime 32/T1.3 F**	2300 g	~~€12.595~~ **€7.000** NEW PRICE
			
K2.47706.0	**ARRI Master Prime 35/T1.3 F**	2200 g	~~€12.595~~ **€5.400** NEW PRICE
			
K2.47716.0	**ARRI Master Prime 150/T1.3 F**	4000 g	~~€19.745~~ **€8.000** NEW PRICE
			
K2.47718.0	**ARRI Master Prime 12/T1.3 F**	2900 g	~~€20.845~~ **€7.000** NEW PRICE
			
ARRI Ultra Prime			
K2.47311.0	**ARRI Ultra Prime 14/T1.9 M**	1800 g	~~€9.920~~ **€3.500** NEW PRICE
			

Ident Nr	Product Description	Weight & Dimensions (W × H × D)	Price
K2.47312.0	**ARRI Ultra Prime 16/T1.9 M**	1200 g	~~€7.980~~ **€2.400** NEW PRICE
			
K2.47314.0	**ARRI Ultra Prime 24/T1.9 M**	1000 g	~~€7.300~~ **€2.200** NEW PRICE
			
K2.47321.0	**ARRI Ultra Prime 135/T1.9 M**	1600 g	~~€9.555~~ **€3.200** NEW PRICE
			
K2.47323.0	**ARRI Ultra Prime 14/T1.9 F**	1800 g	~~€9.920~~ **€3.500** NEW PRICE
			
K2.47324.0	**ARRI Ultra Prime 16/T1.9 F**	1200 g	~~€7.980~~ **€2.400** NEW PRICE
			
K2.47325.0	**ARRI Ultra Prime 20/T1.9 F**	1200 g	~~€7.610~~ **€2.400** NEW PRICE
			

Ident Nr	Product Description	Weight & Dimensions (W × H × D)	Price
K2.47326.0	**ARRI Ultra Prime 24/T1.9 F**	1000 g	~~€7.300~~ **€2.200** NEW PRICE
			
K2.47327.0	**ARRI Ultra Prime 28/T1.9 F**	1000 g	~~€6.770~~ **€2.800** NEW PRICE
			
K2.47328.0	**ARRI Ultra Prime 32/T1.9 F**	1100 g	~~€6.770~~ **€2.400** NEW PRICE
			
K2.47329.0	**ARRI Ultra Prime 40/T1.9 F**	1000 g	~~€6.770~~ **€3.000** NEW PRICE
			
K2.47330.0	**ARRI Ultra Prime 50/T1.9 F**	1000 g	~~€6.770~~ **€3.200** NEW PRICE
			
K2.47331.0	**ARRI Ultra Prime 85/T1.9 F**	1200 g	~~€7.090~~ **€2.800** NEW PRICE
			

Ident Nr	Product Description	Weight & Dimensions (W × H × D)	Price
K2.47332.0	**ARRI Ultra Prime 100/T1.9 F**	1200 g	~~€7.980~~ **€5.000** NEW PRICE
			
K2.47333.0	**ARRI Ultra Prime 135/T1.9 F**	1600 g	~~€9.555~~ **€3.200** NEW PRICE
			
K2.47377.0	**ARRI Ultra Prime 65/T1.9 M**	1100 g	~~€7.090~~ **€3.500** NEW PRICE
			
K2.47378.0	**ARRI Ultra Prime 12/T2.0 M**	2000 g	~~€12.075~~ **€7.000** NEW PRICE
			
K2.47379.0	**ARRI Ultra Prime 65/T1.9 F**	1100 g	~~€7.090~~ **€3.500** NEW PRICE
			
K2.47380.0	**ARRI Ultra Prime 12/T2.0 F**	2000 g	~~€12.075~~ **€7.000** NEW PRICE
			

Ident Nr	Product Description	Weight & Dimensions (W × H × D)	Price
K2.47381.0	**ARRI Ultra Prime 180/T1.9 M**	2600 g	~~€10.500~~ **€4.000** NEW PRICE
			
K2.47382.0	**ARRI Ultra Prime 180/T1.9 F**	2600 g	~~€10.500~~ **€4.000** NEW PRICE
			
K2.47612.0	**ARRI Ultra Prime 8R/T2.8 F**	2000 g	~~€17.850~~ **€15.000** NEW PRICE
			
K2.47613.0	**ARRI Ultra Prime 8R/T2.8 M**	2000 g	~~€17.850~~ **€15.000** NEW PRICE
			

ARRI Alura Zoom

K2.47926.0	**ARRI ALURA Extender 1.4x LDS**		~~€3.410~~ **€1.000** NEW PRICE
	1.4x Extender lense specifically designed to be partnered with ALEXA PLUS camera models equipped with ALURA Zoom Lenses		
K2.47927.0	**ARRI ALURA Extender 2.0x LDS**		~~€3.620~~ **€1.500** NEW PRICE
	2.0x Extender lenses specifically designed to be partnered with ALEXA PLUS camera models equipped with ALURA Zoom Lenses		

Ident Nr	Product Description	Weight & Dimensions (W × H × D)	Price
ARRI Full Spectrum Neutral Density Filter			
K2.0013890	ARRI FSND 1.8 Filter 4in x 5.65in	144 g · 102 × 144 × 4 mm	~~€325~~ **€250** NEW PRICE
			
K2.0013891	ARRI FSND 2.4 Filter 4in x 5.65in	144 g · 102 × 144 × 4 mm	~~€325~~ **€250** NEW PRICE
			
K2.0013892	ARRI FSND 0.3 Filter 6.6in x 6.6in	277 g · 168 × 168 × 4 mm	~~€445~~ **€290** NEW PRICE
			
K2.0013894	ARRI FSND 0.6 Filter 6.6in x 6.6in	277 g · 168 × 168 × 4 mm	~~€445~~ **€290** NEW PRICE
			
K2.0013895	ARRI FSND 0.9 Filter 4in x 5.65in	144 g · 102 × 144 × 4 mm	~~€325~~ **€250** NEW PRICE
			
K2.0013896	ARRI FSND 0.9 Filter 6.6in x 6.6in	277 g · 168 × 168 × 4 mm	~~€445~~ **€290** NEW PRICE
			

Ident Nr	Product Description	Weight & Dimensions (W × H × D)	Price
K2.0013897	**ARRI FSND 1.5 Filter 4in x 5.65in**	144 g · 102 × 144 × 4 mm	~~€325~~ **€250** NEW PRICE
			
K2.0013898	**ARRI FSND 1.2 Filter 6.6in x 6.6in**	277 g · 168 × 168 × 4 mm	~~€445~~ **€290** NEW PRICE
			
K2.0013900	**ARRI FSND 1.5 Filter 6.6in x 6.6in**	277 g · 168 × 168 × 4 mm	~~€445~~ **€290** NEW PRICE
			
K2.0013903	**ARRI FSND 2.1 Filter 4in x 5.65in**	144 g · 102 × 144 × 4 mm	~~€325~~ **€250** NEW PRICE
			
K2.0013905	**ARRI FSND 2.1 Filter 6.6in x 6.6in**	277 g · 168 × 168 × 4 mm	~~€445~~ **€290** NEW PRICE
			
K2.0013906	**ARRI FSND 2.4 Filter 6.6in x 6.6in**	277 g · 168 × 168 × 4 mm	~~€445~~ **€290** NEW PRICE
			

Ident Nr	Product Description	Weight & Dimensions (W × H × D)	Price

Camera Stabilizer Systems

CSS Dovetail Plates

K2.0014215	**Stabilizer Adapter Mount SAM-2 for ALEXA Mini**	361 g · 230 × 120 × 40 mm	~~€610~~ **€480** NEW PRICE

The SAM-2 offers optical-centred mounting of ALEXA Mini cameras to the ARRI Trinity and MAXIMA systems. The SAM-2 is also compatible with third party stabilizer systems fitted with a standard 60mm dovetail.

For TRINITY 2, ARTEMIS 2, TRINITY Gen .1, 360 EVO, SRH-3, SRH-360, MAXIMA



Ident Nr	Product Description	Weight & Dimensions (W × H × D)	Price

Pro Camera Accessories

Accessories for Wireless Video System

K2.0014152	**Cable Antenna Extension (1.0m/3.3ft)**		~~€120~~ **€95** NEW PRICE
	Connects an antenna (SMA) connector used for Wireless Video System (WVS), WiFi and Electronic Control System (ECS) on ALEXA camera bodies to an antenna. One angled and one straight connector. Length: 1.0m/3.3ft		
K2.0014454	**Battery Adapter Cage V-Mount BAC-V**		**€120**
	This unit is designed to support the Wireless Video Transmitter WVT-1 between the camera battery adapter and the on-board battery.		
K2.0014774	**Receiver Power Supply RPS-1**	90 g	~~€110~~ **€80** NEW PRICE
	AC power supply that powers the Wireless Video Receiver WVR-1. Can also be used to power Wireless Video Transmitter (WVT-1) or Universal Motor Controller (UMC-4). International wall socket adapters included.		
K2.0014776	**Cable RS/PWR IN (3p) - PWR OUT/12V (2p) (0.15m/0.5ft)**	90 g	~~€130~~ **€85** NEW PRICE
	Cable PWR OUT/12V connector Lemo-type 2 pin (male) to PWR IN/RS Fischer-type 3 pin (female). Can be used to power Wireless Video Transmitter WVT-1 when used in the Battery Adapter Cage BAC-V or BAC-G.		
K2.0014827	**Rod Mounting Bracket RMB-5**	49 g · 59 × 73 × 30 mm	~~€50~~ **€30** NEW PRICE
	The RMB-5 attaches to the Wireless Video Receiver WVR-1, allowing ,ounting to 19mm rod, such as in the Director's Monitor Support DMS-1		
K2.0014829	**Adjustable Monitor Mount AMM-1**	202 g · 55 × 135 × 127 mm	~~€150~~ **€115** NEW PRICE
	Adjustable monitor bracket compatible with monitors with screen sizes up to 9". The AMM-1 secures monitors via top and bottom standard 1/4"threads. The AMM-1 mounts to 19mm rod, such as the rod for Director's Monitor Support DMS-1.		

Ident Nr	Product Description	Weight & Dimensions (W × H × D)	Price
K2.0014832	**Monitor Adapter for Small HD**	91 g · 43 × 90 × 64 mm	**€100**
	This adapter mounts most SmallHD monitors to 19mm rods, such as the rod for Director's Monitor Support DMS-1.		
K2.0014833	**Lighting Spigot Adapter LSA-1**	99 g · 53 × 80 × 37 mm	~~€75~~ **€50** NEW PRICE
	Permits the attachment of a 19 mm rod to a standard lighting spigot 5/8"		
K2.0014991	**HDTV BNC Cable (0.3m/1ft)**	90 g	~~€26~~ **€20** NEW PRICE
			

Left Hander Focus Rings for Hi-5 and Hi-5 SX

K2.0047255	**Smart Focus Ring Left Hander 2ft**		~~€52~~ **€47** NEW PRICE
	Auto-detectable focus left hand ring with precision scale from 2' to infinity. Plug-and-play with the Hi-5 hand unit.	 Sample Picture	
KK.0047206	**Smart Focus Ring Left Hander Set Feet (10x)**		~~€500~~ **€445** NEW PRICE
	Set of 10 left-hander imperial smart focus rings for the Hi-5 hand unit. Includes: K2.0047251 1x Smart Focus Ring Left Hander 9in K2.0047252 1x Smart Focus Ring Left Hander 1ft K2.0047253 1x Smart Focus Ring Left Hander 1ft3 K2.0047254 1x Smart Focus Ring Left Hander 1ft8 K2.0047255 1x Smart Focus Ring Left Hander 2ft K2.0047256 1x Smart Focus Ring Left Hander 2ft6 K2.0047257 1x Smart Focus Ring Left Hander 3ft6 K2.0047258 1x Smart Focus Ring Left Hander 5ft K2.0047259 1x Smart Focus Ring Left Hander 6ft6 K2.0047260 1x Smart Focus Ring Left Hander 10ft	 Sample Picture	

Ident Nr	Product Description	Weight & Dimensions (W × H × D)	Price

Reversed Focus Rings for Hi-5 and Hi-5 SX

K2.0047224	**Smart Focus Ring Reverse 0.50m**		~~€52~~ **€47** NEW PRICE
	Auto-detectable right-hander focus ring for with reversed precision scale from infinity to 0.50m. Plug-and-play with the Hi-5 hand unit.		
K2.0047226	**Smart Focus Ring Reverse 1.00m**		~~€52~~ **€47** NEW PRICE
	Auto-detectable right-hander focus ring for with reversed precision scale from infinity to 1.0m. Plug-and-play with the Hi-5 hand unit.		
K2.0047227	**Smart Focus Ring Reverse 1.50m**		~~€52~~ **€47** NEW PRICE
	Auto-detectable right-hander focus ring for with reversed precision scale from infinity to 1.50m. Plug-and-play with the Hi-5 hand unit.		
K2.0047228	**Smart Focus Ring Reverse 2.00m**		~~€52~~ **€47** NEW PRICE
	Auto-detectable right-hander focus ring for with reversed precision scale from infinity to 2.0m. Plug-and-play with the Hi-5 hand unit.		
K2.0047229	**Smart Focus Ring Reverse 3.00m**		~~€52~~ **€47** NEW PRICE
	Auto-detectable right-hander focus ring for with reversed precision scale from infinity to 3.0m. Plug-and-play with the Hi-5 hand unit.		
K2.0047230	**Smart Focus Ring Reverse 9in**		~~€52~~ **€47** NEW PRICE
	Auto-detectable right-hander focus ring for with reversed precision scale from infinity to 9in. Plug-and-play with the Hi-5 hand unit.	 Sample Picture	

Ident Nr	Product Description	Weight & Dimensions (W × H × D)	Price
K2.0047231	**Smart Focus Ring Reverse 1ft**		~~€52~~ **€47** NEW PRICE
	Auto-detectable right-hander focus ring for with reversed precision scale from infinity to 1'. Plug-and-play with the Hi-5 hand unit.	 Sample Picture	
K2.0047232	**Smart Focus Ring Reverse 1ft3**		~~€52~~ **€47** NEW PRICE
	Auto-detectable right-hander focus ring for with reversed precision scale from infinity to 1'3. Plug-and-play with the Hi-5 hand unit.	 Sample Picture	
K2.0047233	**Smart Focus Ring Reverse 1ft8**		~~€52~~ **€47** NEW PRICE
	Auto-detectable right-hander focus ring for with reversed precision scale from infinity to 1'8. Plug-and-play with the Hi-5 hand unit.	 Sample Picture	
K2.0047234	**Smart Focus Ring Reverse 2ft**		~~€52~~ **€47** NEW PRICE
	Auto-detectable right-hander focus ring for with reversed precision scale from infinity to 2'. Plug-and-play with the Hi-5 hand unit.	 Sample Picture	
K2.0047235	**Smart Focus Ring Reverse 2ft6**		~~€52~~ **€47** NEW PRICE
	Auto-detectable right-hander focus ring for with reversed precision scale from infinity to 2'6. Plug-and-play with the Hi-5 hand unit.	 Sample Picture	
K2.0047236	**Smart Focus Ring Reverse 3ft6**		~~€52~~ **€47** NEW PRICE
	Auto-detectable right-hander focus ring for with reversed precision scale from infinity to 3'6. Plug-and-play with the Hi-5 hand unit.	 Sample Picture	

Ident Nr	Product Description	Weight & Dimensions (W × H × D)	Price
K2.0047237	**Smart Focus Ring Reverse 5ft**		~~€52~~ **€47** NEW PRICE
	Auto-detectable right-hander focus ring for with reversed precision scale from infinity to 5'. Plug-and-play with the Hi-5 hand unit.	 Sample Picture	
K2.0047238	**Smart Focus Ring Reverse 6ft6**		~~€52~~ **€47** NEW PRICE
	Auto-detectable right-hander focus ring for with reversed precision scale from infinity to 6'6. Plug-and-play with the Hi-5 hand unit.	 Sample Picture	
K2.0047239	**Smart Focus Ring Reverse 10ft**		~~€52~~ **€47** NEW PRICE
	Auto-detectable right-hander focus ring for with reversed precision scale from infinity to 10'. Plug-and-play with the Hi-5 hand unit.	 Sample Picture	
KK.0047204	**Smart Focus Ring Reverse Set Feet (10x)**		~~€500~~ **€440** NEW PRICE
	Set of 10 imperial reverse smart focus rings. Right-hander rings with reversed scale. Plug-and-play with the Hi-5 hand unit. includes: K2.0047230 1x Smart Focus Ring Reverse 9in K2.0047231 1x Smart Focus Ring Reverse 1ft K2.0047232 1x Smart Focus Ring Reverse 1ft3 K2.0047233 1x Smart Focus Ring Reverse 1ft8 K2.0047234 1x Smart Focus Ring Reverse 2ft K2.0047235 1x Smart Focus Ring Reverse 2ft6 K2.0047236 1x Smart Focus Ring Reverse 3ft6 K2.0047237 1x Smart Focus Ring Reverse 5ft K2.0047238 1x Smart Focus Ring Reverse 6ft6 K2.0047239 1x Smart Focus Ring Reverse 10ft	 Sample Picture	

CAM Cables for RIA-1 and cforce mini RF

K2.0015755	**Cable CAM (7p) – EXT (16p) (0.8m/2.6ft)**	9 g	~~€250~~ **€170** NEW PRICE
	Connects ARRI Radio Interface Adapter RIA-1/cforce RF motor/cmotion cPRO motor and camin to the EXT connector of an ALEXA EV camera. Provides camera RUN/STOP function, tally and camera status information on ARRI and cmotion hand units. Length: 0,8m/2.6ft		

Ident Nr	Product Description	Weight & Dimensions (W × H × D)	Price
K2.0015758	**Cable CAM (7p) – RED CTRL/D-Tap (0.6m/2ft)**	9 g	~~€270~~ **€245** NEW PRICE
	Connects ARRI Radio Interface Adapter RIA-1, cforce mini RF motor, cmotion cPRO motor and cmotion camin to RED CTRL connector and D-Tap power. Connects directly to RED DSMC2, RED Weapon cameras while a breakout box is required to connect to RED DSMC3 cameras. Supports camera REC start/stop function, tally and control of EF lenses. Also supports camera status and camera control on ARRIs Hi-5 hand unit and cmotion cPRO hand unit (license required). Length: 0.6m/2ft.		
K2.0018814	**Cable CAM (7p) – Sony Venice/F55 CTRL/D-Tap (0.6m/2ft)**	8 g	~~€330~~ **€300** NEW PRICE
	Connects ARRI Radio Interface Adapter RIA-1/cforce RF motor/cmotion cPRO motor and camin to Sony F5/55/Venice cameras and D-Tap power source. Provides camera RUN/STOP function and tally. Length: 0.6m/2ft		
K2.0034580	**Cable CAM (7p) - LCS (5p) (0.8m/2.6ft)**		~~€220~~ **€200** NEW PRICE
	Connects CAM connector of Radio Interface Adapter RIA-1, cforce mini RF, cmotion cPRO motor and cmotion camin to LCS connector of ARRI ALEXA Plus type cameras. Provides camera REC start/stop, tally, camera setting and status information via Hi-5 hand unit and cmotion cPRO hand unit (license required). Length: 0.8m/2.6ft.		

Cables for RIA-1

K2.0044396	**Cable CineTape – SERIAL (4p) (0.8m/2.6ft)**		~~€180~~ **€170** NEW PRICE
	Connects the Radio Interface Adapter RIA-1 and the ALEXA 35 to a Cine Tape Measure. Length: 0.8m/2.6ft		

Wireless Compact Unit WCU-4

K2.0002069	**Lanyard for WCU-4**	87 g · 100 × 60 × 150 mm	~~€60~~ **€35** NEW PRICE
	Attaches to Wireless Compact Unit WCU-4.		
K2.0023772	**Accessory Mounting Rail AMR-110**		~~€60~~ **€45** NEW PRICE
	Mounting rail with NATO standard. Mounts to standard ARRI 3/8"-16 threads.		

Ident Nr	Product Description	Weight & Dimensions (W × H × D)	Price
K2.0024466	**AMR Plate Adapter**		~~€100~~ **€80** NEW PRICE
	The AMR plate extends the WCU-4 plate and offers mounting options to the Accessory Mounting Rail AMR 110.		
K2.72131.0	**Pre-Marked Focus Ring 0.50m for WCU-4**	19 g	~~€30~~ **€15** NEW PRICE
	Enables focus mapping with Wireless Compact Unit WCU-4 and Universal Motor Controller UMC-4, all ALEXA cameras with Plus module, ALEXA Mini, ALEXA Mini LF and cforce mini RF.		
K2.72132.0	**Pre-Marked Focus Ring 1.00m for WCU-4**	19 g	~~€30~~ **€15** NEW PRICE
	Enables focus mapping with Wireless Compact Unit WCU-4 and Universal Motor Controller UMC-4, all ALEXA cameras with Plus module, ALEXA Mini, ALEXA Mini LF and cforce mini RF.		

Single Axis Unit SXU-1

K2.0000958	**Lanyard for SXU-1**	110 g · 210 × 40 × 130 mm	**€35**
	Attaches to Single Axis Unit SXU-1.		
K2.0003423	**Carrying Case for SXU-1 and Accessories**	5300 g · 480 × 430 × 230 mm	~~€200~~ **€180** NEW PRICE
	With compartments for one SXU-1, 5 marking rings, 2 batteries, one charger, one CLM motor, one Mini Motor Controller (e.g. SMC-1), various gears, cables and mounting accessories.		

Accessories for WCU-4 and SXU-1 Hand Units

K2.0000425	**Hand Unit AC Power Supply HPS-1**	162 g · 90 × 60 × 60 mm	~~€100~~ **€95** NEW PRICE
	AC power supply adapter for SXU-1 and WCU-4.		

Ident Nr	Product Description	Weight & Dimensions (W × H × D)	Price
K2.72117.0	**Plain White Focus Ring for WCU-4, SXU-1**	17 g	~~€20~~ **€10** NEW PRICE
	Works with Wireless Compact Unit WCU-4 or Single Axis Unit SXU-1.		

Master Grips

KK.0013215	**Master Grip Zoom Set 3rd-Party Cameras**		~~€9.710~~ **€5.870** NEW PRICE
	Pre-configured set with Master Grips and accessories, suitable for controlling zoom lenses on 3rd-party cameras. Includes: K2.0009493 1x Master Grip Right Rocker MRR-1 K2.0009363 1x Master Grip Left Wheel MLW-1 K2.0012911 2x Handgrip Extension 160mm K2.0012921 2x Cable Clip 15mm K2.47136.0 1x Extension Tube for Handgrip K2.0008630 1x LCUBE CUB-1 K2.0010681 1x LCUBE CUB-2 K2.0009620 2x LCUBE Bracket K2.0013040 1x Cable LBUS (angled) - LBUS (angled) (0.6m/1.9ft) K2.0012631 1x Cable SERIAL (7p) - F5/55 (0.4m/1.3ft) K2.0012632 1x Cable SERIAL (7p) - RED (0.4m/1.3ft) K2.0012633 1x Cable SERIAL (7p) - LANC (0.4m/1.3ft) K2.0022328 1x Cable LENS/ENG (12p) - Hi (12p) analog K2.0012965 1x Master Grip Case Note: cforce motors, respective LBUS cables, ENG lens cable and 15mm rods/supporting hardware not included!		

Operator Control Unit OCU-1

K2.0022269	**OCU-1 Dovetail Mounting Interface**	13 g · 44 × 6 mm	~~€170~~ **€130** NEW PRICE
	Compatible with Operator Control Unit OCU-1 (K2.0020002) with a dovetail mounting interface for CLM-5/cforce mini Clamp Console 19/15mm (K2.0006176) and two screws for flexible mounting positions. Note: K2.0006176 CLM-5/cforce mini Clamp Console 19/15mm not included!		

Universal Motor Controller UMC-4

K2.0001604	**Cable CAM (16p) - EXT (6p) (0.5m/1.6ft)**	42 g · 500 × 9 × 15 mm	~~€250~~ **€225** NEW PRICE
	Connects Universal Motor Controller CAM connector to AMIRA, ALEXA Mini and ALEXA Mini LF EXT connector. Provides camera RUN/STOP function, tally and remote camera set up with ALEXA Remote Licence on WCU-4. Length: 0.5m/1.6ft. Note: ALEXA Mini and ALEXA Mini LF may not supply the UMC-4 with enough power to drive three motors at the same time. In this case, you may supply power from an additional power source through the RS IN connector (e.g. K2.0002668 Cable UMC-4 RS IN to D-Tap).		

Ident Nr	Product Description	Weight & Dimensions (W × H × D)	Price
K2.0001758	**V-Plate**	19 g · 70 × 20 × 100 mm	~~€105~~ **€70** NEW PRICE
	V-shaped plate with 3/8 inch screw that mounts on the back of UMC-4, SMC-1, EMC-1 and AMC-1 motor controllers. Compatible with Sony-style V-lock brackets.	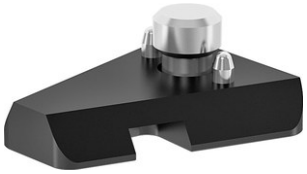	
K2.0002620	**Cable CAM (16p) - F55 (0.5m/1.6ft)**		~~€220~~ **€150** NEW PRICE
	Connects Universal Motor Controller CAM connector to Sony F5/F55/Venice and Panasonic Varicam 35 cameras. Provides camera RUN/STOP function and tally. Length: 0.5m/1.6ft Separate UMC-4 RS IN cable for power supply required.		
K2.0002656	**Cable CAM (16p) - F65 (0.5m/1.6ft)**		~~€250~~ **€130** NEW PRICE
	Connects Universal Motor Controller CAM connector to Sony F65. Provides camera RUN/STOP function. Length: 0.5m/1.6ft Separate UMC-4 RS IN cable for power supply required.		
K2.0002672	**Cable RS IN - PSC (0.7m/2ft)**		~~€190~~ **€150** NEW PRICE
	Connects RS IN connector on UMC-4 with Power System Connector (PSC) cables. Length: 0.7m/2ft. Additional Power Supply Connector (PSC) cable required.		
K2.0002855	**Cable CAM (16p) - RED EPIC (0.5m/1.6ft)**		~~€230~~ **€110** NEW PRICE
	Connects Universal Motor Controller UMC-4 to RED Epic. Provides camera RUN/STOP function and tally. Length: 0.5m/1.6ft Separate UMC-4 RS IN cable for power supply required. Works with: - DSMC REDVOLT Expander - DSMC JETPACK Expander - DSMC V-Lock I/O Expander - REDCAST Module		
K2.0002919	**Cable CAM (16p) - LANC (0.5m/1.6ft)**		~~€290~~ **€260** NEW PRICE
	Connects Universal Motor Controller CAM connector to LANC connectors (e.g. Canon C300/500). Provides camera RUN/STOP function and tally. Length: 0.5m/1.6ft. Separate UMC-4 RS IN cable for power supply required.		

Ident Nr	Product Description	Weight & Dimensions (W × H × D)	Price
K2.0003624	**Cable UMC-4 to RS232 D-Sub**		~~€140~~ **€90** NEW PRICE
	This cable connects ARRI control systems (such as the Universal Motor Controller UMC-4 or the LCUBE CUB-1) via a serial RS232 interface.		
K2.0005951	**Cable CAM (16p) - EXT (16p)**	100 g	~~€390~~ **€280** NEW PRICE
	Connects Universal Motor Controller CAM connector to the EXT connector on the ALEXA family of cameras. Provides camera RUN/STOP function, tally and camera status information on WCU-4. Enables WCU-4 ALEXA Remote License for ALEXA cameras without the Plus module.		
K2.0010194	**Cable CAM (16p) - Panaflex Millenium (0.4m)**		~~€580~~ **€400** NEW PRICE
	Connects Universal Motor Controller UMC-4 to Panaflex Millennium film camera. Provides camera record start/stop function and tally. Length: 0.4 m/1.3ft		
K2.0012626	**Cable CAM (16p) - RED Weapon (0.5m/1.6ft)**		~~€270~~ **€200** NEW PRICE
	Connects Universal Motor Controller UMC-4 to RED Weapon. Provides camera RUN/STOP function and tally. Length: 2x 0.5m/1.6ft Note: Do not use with RED DSMC2 BASE EXPANDER and RED EPIC!		
K2.65063.0	**Cable SERIAL (7p) - Cine Tape (coiled)**	122 g · 160 × 210 × 15 mm	~~€200~~ **€130** NEW PRICE
	Connects Universal Motor Controllers and LCUBE CUB-1 to Cine Tape Measure.		

Mini Motor Controllers

K2.0001606	**Cable CAM (10p) - RS (3p) (0.5m/1.6ft)**	42 g · 500 × 9 × 9 mm	~~€150~~ **€90** NEW PRICE
	Connects SMC-1, EMC-1 and AMC-1 motor controllers to ARRI RS connector. Provides camera RUN/STOP and tally function. Works with ALEXA and AMIRA cameras. Length: 0.5m/1.6ft		

Ident Nr	Product Description	Weight & Dimensions (W × H × D)	Price
K2.0001997	**Cable CAM (10p) - Sony F5/55**		~~€150~~ **€55** NEW PRICE
	Connects SMC-1, EMC-1 and AMC-1 motor controllers to Sony F5/55/Venice and Panasonic Varicam 35 cameras. Provides camera RUN/STOP function and tally. Length: 0.5m/1.6ft		
K2.0001998	**Cable CAM (10p) - RED EPIC/D-Tap**		~~€140~~ **€70** NEW PRICE
	Connects SMC-1, EMC-1 and AMC-1 motor controllers to RED EPIC camera and D-Tap power source. Provides camera RUN/STOP function. Length: 2x 0.5m/1.6ft		
K2.0001999	**Cable CAM (10p) - LANC/D-Tap (0.5m/1.6ft)**		~~€200~~ **€180** NEW PRICE
	Connects SMC-1/EMC-1 and AMC-1 motor controllers to LANC connectors (e.g. Canon C300/500, Sony PXW-FS7) and D-Tap power source. Provides camera RUN/STOP function and tally. Length: 2x 0.5m/1.6ft		
K2.0002682	**Cable CAM (10p) - D-Tap (0.5m/1.6ft)**		~~€130~~ **€120** NEW PRICE
	Connects SMC-1/EMC-1 and AMC-1 motor controllers to D-Tap power source. Length: 0.5m/1.6ft.		
K2.0002725	**Cable CAM (10p) - open end**		**€95**
	Open-end cable with connector to SMC/EMC/AMC on one side. Length: 0.5m/1.6ft		
K2.0002727	**Cable CAM (10p) - PSC**		**€140**
	Connects SMC-1, EMC-1 and AMC-1 with Power System Connector (PSC) cables. Length: 0.7m/2ft. Additional Power Supply Connector (PSC) cable required.		

Ident Nr	Product Description	Weight & Dimensions (W × H × D)	Price
K2.0003418	**Cable LENS/ENG (12p) - Fujinon ZK lenses (0.5m/1.6ft)**		~~€220~~ **€200** NEW PRICE
	Connects EMC-1 to 20 pin connector on Fujinon ZK lenses. Additional power cable required. Length: 0.5m/1.6ft.		
K2.0007730	**Cable CAM (10p) - EXT (7p) (0.5m/1.6tf)**		~~€140~~ **€125** NEW PRICE
	Connects SMC-1, EMC-1 and AMC-1 motor controllers to ALEXA Mini and ALEXA Mini LF EXT connector. Provides camera RUN/STOP function and tally. Length: 0.5m/1.6ft Note: ALEXA Mini and ALEXA Mini LF may not supply the AMC-1 with enough power to drive three cforce motors at the same time. In this case, you may supply power from an additional power source through the unused cforce motor LBUS connector (e.g. K2.0006758 Cable LBUS to D-Tap 0.8m/2.6ft).		
K2.0013723	**Cable CAM (10p) - Red WEAPON (0.5m/1.6ft)**		~~€140~~ **€125** NEW PRICE
	Connects SMC-1, EMC-1 and AMC-1 to RED Weapon. Provides camera REC start/stop function and tally. Length: 2x 0.5m/1.6ft Note: Use cable only in combination with the RED DSMC² Jetpack/V-Lock I/O Expanders. Do not use it with RED DSMC² Base Expander and RED EPIC! Please read the RED Weapon manual carefully before using this product and be sure of following camera settings on RED Weapon: Menu > Settings > Setup >GPIO Synch: choose “Brain GPIO” SW In High: “Key Disabled” SW In Low: “Record: Toggle” GPO Function: “Recording Indicator Out”		

Controlled Lens Motor CLM-3

K2.0001256	**CLM-3 Gear m0.8/32p, 60t, 25mm**		~~€110~~ **€70** NEW PRICE
	25 mm wide gear for moving lens barrels.		
K2.0001911	**CLM-3 Gear m0.4/64p, 120t**		~~€110~~ **€70** NEW PRICE
	For Panavision iris, Fujinon ENG iris, Canon ENG iris.		

Ident Nr	Product Description	Weight & Dimensions (W × H × D)	Price
K2.0001918	**CLM-3 Gear m0.6, 84t**		~~€110~~ **€70** NEW PRICE
	For Fujinon ENG focus/zoom.		
K2.0002077	**19mm to 15mm inserts for CLM-3, pair**	4 g	~~€80~~ **€60** NEW PRICE
	For 15 mm rods.		
K2.65141.0	**CLM-3 Clamp Console 2**	68 g · 45 × 75 × 25 mm	~~€315~~ **€200** NEW PRICE
	Special clamp console for use with film cameras and short lenses in the area of the camera mirror shutter. With integrated dovetail slide; includes magnetic inserts for use with 15 mm support rods. Also fits to CLM-4 motor unit.		
K2.65145.0	**Cable CLM-3 (7p) - CLM/FIZ (12p) (0,8m/2.6ft)**	91 g	**€110**
	Connects CLM-3 motor with motor controllers.		
K2.66180.0	**19mm to 5/8in inserts for CLM-3, pair**	4 g	~~€80~~ **€50** NEW PRICE
	For Panavsion 5/8 inch rods.		
KK.0005854	**Controlled Lens Motor CLM-3 Basic Set**	500 g · 255 × 65 × 170 mm	~~€2.950~~ **€2.065** NEW PRICE
	includes: K2.65143.0 1x CLM-3 Motor Unit K2.65145.0 1x Cable CLM-3 (7p) - CLM/FIZ (12p) (0,8m/2.6ft) K2.65140.0 1x CLM-3 Standard Clamp Console K2.65142.0 1x CLM-3 Gear m0.8/32p, 60t		

Ident Nr	Product Description	Weight & Dimensions (W × H × D)	Price

Controlled Lens Motor CLM-4

K2.0000244	**CLM-4 Gear Flange**		~~€100~~ **€90** NEW PRICE
	Optional upgrade for those who want to have a metal core gear flange on each gear module. Mounting screws for the core and gear screw (K2.72127.0) are included.		
K2.0002080	**CLM-4 Clamp Insert 19mm to 15mm**	3 g	~~€59~~ **€50** NEW PRICE
	For 15 mm rods.		
K2.72099.0	**Cable CLM-4 (8p) - CLM/FIZ (12p) (0,8m/2.6ft)**	68 g	~~€170~~ **€155** NEW PRICE
	Connects CLM-4 motor with motor controllers.		
K2.72114.0	**CLM-4 Motor Unit**	81 g	~~€2.560~~ **€1.500** NEW PRICE
	CLM-4 motor unit without gears, cable and bracket.		
K2.72115.0	**CLM-4 Clamp Insert 5/8in**	3 g	~~€59~~ **€40** NEW PRICE
	For Panavision 5/8 inch rods.		
KK.0005855	**Controlled Lens Motor CLM-4 Basic Set**	454 g · 255 × 65 × 170 mm	~~€3.040~~ **€1.750** NEW PRICE
	Includes: K2.72114.0 1x CLM-4 Motor Unit K2.72099.0 1x Cable CLM-4 (8p) - CLM/FIZ (12p) (0,8m/2.6ft) K2.72101.0 1x CLM-4 Standard Clamp Console 19/15mm K2.72116.0 1x CLM-4 Gear Set m0.8, 0.6, 0.5, 0.4		

Ident Nr	Product Description	Weight & Dimensions (W × H × D)	Price

Controlled Lens Motor CLM-5

K2.0006332	**Cable CLM-5 (10p) - CLM/FIZ (12p) (0,8m/2.6ft)**		~~€120~~ **€90** NEW PRICE
	Connects CLM-5 motor with motor controllers.		
K2.0006360	**CLM-5 Motor Unit**	222 g · 255 × 65 × 170 mm	~~€2.120~~ **€1.200** NEW PRICE
	CLM-5 motor unit without gears and bracket. Includes: K2.0006332 1x Cable CLM-5 (10p) - CLM/FIZ (12p) (0,8m/2.6ft)		

Active Lens Motor cforce plus

K2.0008678	**cforce plus Clamp Console 19/15mm**	46 g · 180 × 20 × 90 mm	~~€190~~ **€165** NEW PRICE
	Includes: K2.0006175 1x CLM-5/cforce mini Clamp Insert 19/15mm Note: The clamp insert is compatible to cforce mini, cforce mini RF, cforce plus and CLM-5 clamp consoles.		
K2.0008819	**cforce plus Motor Unit**	310 g · 255 × 65 × 170 mm	~~€3.010~~ **€2.525** NEW PRICE
	cforce plus motor unit without gears, cable and bracket.		
KK.0008824	**cforce plus Basic Set**	384 g · 255 × 65 × 170 mm	~~€3.380~~ **€2.925** NEW PRICE
	Includes: K2.0008819 1x cforce plus Motor Unit K2.0008678 1x cforce plus Clamp Console 19/15mm K2.0009335 1x cforce plus Gear m0.8/32p, 60t Note: LBUS motor cables need to be ordered separately.		

Ident Nr	Product Description	Weight & Dimensions (W × H × D)	Price

Accessories for CLM-4 and cforce plus Motors

K2.0002044	**CLM-4/cforce plus Gear 48p, 75t**		~~€250~~ **€200** NEW PRICE
	For Panavision zoom.		
K2.52035.0	**Motor offset console**	180 g	~~€580~~ **€400** NEW PRICE
	Offset rod extension for tight spaces and small builds. Fits 19mm or 15mm support rods.		
K2.72106.0	**cforce plus Rod-to-Rod Adapter 15mm**	35 g	~~€135~~ **€90** NEW PRICE
	15 mm rod adapter that attaches to CLM-4 and cforce plus motors.		
K2.72107.0	**cforce plus Rod-to-Rod Bridge 15mm**	57 g	~~€240~~ **€165** NEW PRICE
	15 mm rod-to-rod adapter that attaches to CLM-4 and cforce plus motors.		
K2.72113.0	**cforce plus Rosette for Hill Bracket**	23 g	~~€150~~ **€100** NEW PRICE
	Rosette adapter that connects CLM-4 and cforce plus motors to Hill brackets.		

LCUBE converters

K2.0012631	**Cable SERIAL (7p) - F5/55 (0.4m/1.3ft)**		~~€210~~ **€150** NEW PRICE
	Connects LCUBE CUB-1 to Sony F5/F55/Venice cameras. Length: 0.4 m/1.3ft		

Ident Nr	Product Description	Weight & Dimensions (W × H × D)	Price
K2.0012632	**Cable SERIAL (7p) - RED (0.4m/1.3ft)**		~~€210~~ **€140** NEW PRICE
	Connects LCUBE CUB-1 SERIAL to RED CTRL connector. Length: 0.4 m/1.3ft		
K2.0012633	**Cable SERIAL (7p) - LANC (0.4m/1.3ft)**		~~€250~~ **€210** NEW PRICE
	Connects LCUBE CUB-1 SERIAL connector to LANC connectors (e.g. Canon, Blackmagic Design). Length: 0.4 m/1.3ft		

LBUS Cables

K2.0006760	**Cable LBUS - XLR (4p) (0.8m/2.6ft)**		~~€230~~ **€160** NEW PRICE
	LBUS power cable to XLR 4 pin (Le 4p, XLR 4p). Length: 0.8m/2.6ft.		
K2.0012630	**Cable LBUS (angled) - LBUS (angled) (0.8m/2.6ft)**		~~€300~~ **€270** NEW PRICE
	Connects LBUS devices (e.g. Master Grips). Includes two angled LBUS connectors. Length: 0.8m/2.6ft		
K2.0012785	**Cable LBUS (angled) - LBUS (angled) (0.2m/8in)**		~~€300~~ **€270** NEW PRICE
	Connects LBUS devices (e.g. cforce motors). Includes two angled LBUS connectors. Length: 0.2m/8inches		
K2.0013040	**Cable LBUS (angled) - LBUS (angled) (0.6m/1.9ft)**		~~€300~~ **€270** NEW PRICE
	Connects LBUS devices (e.g. Master Grips). Includes two angled LBUS connectors. Length: 0.6m/2ft		

Ident Nr	Product Description	Weight & Dimensions (W × H × D)	Price
K2.0013044	**Cable LBUS (angled) - LCS (0.8m/2.6ft)**		~~€290~~ **€210** NEW PRICE
	Connects LBUS devices (e.g. Master Grips) with LCS devices (e.g. ALEXA Plus/Studio cameras). Length: 0.80m/2.6ft		
K2.0023823	**Cable LBUS Star (0.2m/8in)**	5 g	~~€200~~ **€160** NEW PRICE
	LBUS cable distribution plug for additional power source (2x Le 4p female, 1x RS) Length: 0.2m/8in		

LCS Cables

K2.0002136	**Cable LCS (5p) - LCS (5p) (3.5m/11ft)**	17 g	~~€220~~ **€185** NEW PRICE
	Connects ARRI hand units and motor controllers for wired operation.		
K2.0002141	**Cable LCS (5p) - LCS (5p) (coiled)**	17 g	~~€220~~ **€170** NEW PRICE
	Connects ARRI hand units and motor controllers for wired operation.		

Ultrasonic Distance Measure UDM-1

K2.0006459	**Cable UDM Display (4p) - UDM Sensor (4p)**		~~€135~~ **€125** NEW PRICE
	Connects UDM-1 display unit to UDM-1 sensor unit. Length: 1.5m/5ft.		
K2.0023553	**Cable UDM - D-Tap (0.8m/2.6ft)**		~~€220~~ **€160** NEW PRICE
	Power supply cable. Connects the CAM (4p) connector on the UDM-1 to D-Tap power source. Length: 0.8m/2.6ft.		

Ident Nr	Product Description	Weight & Dimensions (W × H × D)	Price
K2.0025324	**Cable UDM – SERIAL (4p) (0.5m/1.6ft)**		~~€170~~ **€110** NEW PRICE
	Connects UDM-1 to RIA-1.and to ALEXA 35. Length: 0.5m/1.6ft		
K2.0041172	**Cable UDM - SERIAL (4p) (0.8m/2.6ft)**		~~€170~~ **€100** NEW PRICE
	Connects UDM-1 to RIA-1 and to ALEXA 35. Length: 0.8m/2.6ft		
K2.65144.0	**Cable UDM - SERIAL (7p) (1.5m/5ft)**	101 g · 155 × 230 × 15 mm	~~€170~~ **€155** NEW PRICE
	Connects UDM-1 to Universal Motor Controllers and LCUBE CUB-1. Length: 1.5m/5ft.		
K2.65240.0	**Cable UDM - RS (3p) (1.5m/5ft)**	76 g · 155 × 230 × 10 mm	~~€170~~ **€135** NEW PRICE
	Connects the CAM connector on the UDM-1 to the RS connector on any ARRI camera in order to power the UDM-1. Note: This cable only provides power to the UDM and no data connection.		
K2.65261.0	**Cable UDM - EXT (16p) (0.5m/1.6ft)**	123 g · 155 × 230 × 20 mm	~~€170~~ **€155** NEW PRICE
	Connects the CAM connector on the UDM-1 to the EXT connector on ALEXA cameras in order to power the UDM and send data between camera and UDM. This allows the WCU-4 to display UDM values when the WCU-4 communicates wirelessly with any Plus or Studio ALEXA camera.		
K2.65262.0	**Cable UDM - PSC (1.5m/5ft)**	66 g · 155 × 230 × 15 mm	~~€120~~ **€80** NEW PRICE
	Connects UDM-1 to ARRI PSC power cables. Length: 1.5m/5ft.		

Ident Nr	Product Description	Weight & Dimensions (W × H × D)	Price

Accessories for Lens Data System

K2.0003040 **Cable LDE-1 - CLM/FIZ (12p)** ~~€80~~ **€60** NEW PRICE

Spare cable for the Lens Data Encoder LDE-1.



K2.0003050 **LDE-1 Gear m0.4/64p, 120t** ~~€120~~ **€80** NEW PRICE

For Panavision iris, Fujinon ENG iris, Canon ENG iris.



K2.0003052 **LDE-1 Gear 48p, 90t** **€120**

For Panavision zoom.



ECS Power Cables

K2.0002674 **Cable RS/PWR IN - open end (1.5m/5ft)** ~~€65~~ **€60** NEW PRICE

Cable with open leads (customer must attach their own connector) to PWR IN/RS Fischer-type 3pin (female). Length: 0.5m/1.6ftt



K2.0014331 **Cable PWR OUT/12V (2p) - RS/PWR IN (3p) (0.5m/1.6ft)** 90 g ~~€170~~ **€155** NEW PRICE

Cable PWR OUT 12V Lemo-type 2pin (male) to PWR IN/RS Fischer-type 3pin (female). Provides power but no RUN/STOP function. Can be used to power a WVT-1, WVR-1 or UMC-4 from a camera, battery adapter plate or a power splitting box. Length: 0.5m/1.6ft



K2.0014336 **Cable Hi (4p) - RS/PWR IN (3p) (0.5m/1.6ft)** ~~€160~~ **€110** NEW PRICE

Cable Hirose-type 4pin (male) to PWR IN/RS Fischer-type 3pin (female). Provides power but no RUN/STOP function. Can be used to power a WVT-1, WVR-1 or UMC-4 from a camera or a power splitting box. Length: 0.5m/1.6ft



Ident Nr	Product Description	Weight & Dimensions (W × H × D)	Price
K2.0014337	**Cable Fi (3p) - RS/PWR IN (3p) (0.25m/0.8ft)**		~~€190~~ **€160** NEW PRICE
	Cable RS 24V Fischer-type 3pin (male) to PWR IN/RS Fischer-type 3pin (female). Provides power and RUN/STOP function. Can be used to power a WVT-1, WVR-1 or UMC-4 from a camera. Length: 0.25m/0.8ft		
K2.0014343	**Cable PWR OUT/12V (2p) - MiniXLR (4p) (0.5m/1.6ft)**		~~€135~~ **€115** NEW PRICE
	Cable PWR OUT/12V connector Lemo-type 2p (male) to Mini XLR 4p (female). Can be used to power an external on-board monitor from an ARRI camera, WVR-1, battery adapter plate or a power splitting box. Length: 0.5m/1.6ft		
K2.0014344	**Cable PWR OUT/12V (2p) - Hi (4p) (0.5m/1.6ft)**		~~€110~~ **€75** NEW PRICE
	Cable PWR OUT/12V connector Lemo-type 2p (male) to Hirose-type 4p (female). Can be used to power an external on-board monitor from an ARRI camera, WVR-1, battery adapter plate or a power splitting box. Length: 0.5m/1.6ft		
K2.0014777	**Cable PWR OUT/12V (2p) - Le (5p) (0.5m/1.6ft)**		~~€160~~ **€100** NEW PRICE
	Cable PWR OUT/12V connector Lemo-type 2p (male) to Lemo-type 5p (male). Can be used to power an external on-board monitor from an ARRI camera, WVR-1, battery adapter plate or a power splitting box. Length: 0.5m/1.6ft		

ECS Miscellaneous

K2.0000464	**Cable EXT (16p) - Cine Tape (0.5m/1.6ft)**		~~€175~~ **€120** NEW PRICE
	Connects Cine Tape Measure to ALEXA EXT connector. Length: 1.5m/5ft.		
K2.65275.0	**Expansion Cable for RED EPIC**	26 g · 210 × 10 × 160 mm	~~€120~~ **€80** NEW PRICE
	Enables access to RED Epic SYNC or CTRL sockets when using the Interface adapter UMC-3A CAM to RED EPIC/PSC (K2.65270.0) or the Cable UMC-4 to EPIC (K2.0002855).		

Ident Nr	Product Description	Weight & Dimensions (W × H × D)	Price

Support for Canon EOS C200

K2.0015513 **Top Plate for Canon C200** 245 g · 120 × 30 × 120 mm ~~€400~~ **€250** NEW PRICE

The ARRI Top Plate for Canon C200 is a low-mode support, featuring numerous accessory threads and a built-in console for 15 mm LWS with the possibility to use either the original C200 or the ARRI CCH-2 top handle.



KK.0016044 **Basic Set For Canon C200** ~~€1.410~~ **€980** NEW PRICE

Note:
Using the original Canon C200 Camera Handle with Handgrip Extensions requires a separately sold third party extension cable.
Includes:
K2.0006864 1x Cine Plate for C300 MkII
K2.66252.0 1x Support Rods 340mm/13.4in, 15mm
K2.0006807 1x Shoulder Pad CSP-1
K2.0015518 1x Adapter Plate for Canon C200



Support for Canon EOS C300 MkII

K2.0006797 **Broadcast Plate C300 MkII** 1050 g · 240 × 140 × 90 mm ~~€500~~ **€260** NEW PRICE

Compatible with VCT- style plates such as the ARRI QRP-1. Offers a wide range of shoulder adjustments without affecting the placement of accessories fitted to the integrated 15mm LWS rod system. Compatible with following Canon Cameras: Canon EOS C200 (with additional Adapter Plate for Canon C200), Canon EOS C300, Canon EOS C300 MkII, Canon EOS C500.



K2.0006859 **Top Plate C300 MkII** 230 g · 100 × 110 × 40 mm ~~€190~~ **€120** NEW PRICE

Low-mode plate fitted with an integrated 15mm LWS rod console that provides room for handle and accessories. Compatible with Canon EOS C300 MkII and with the origial Canon top handle.



K2.0006864 **Cine Plate for C300 MkII** 440 g · 140 × 140 × 40 mm ~~€200~~ **€130** NEW PRICE

Offers front and rear 15mm LWS integrated rod consoles, a pair of ARRI rosettes and direct compatibility to studio bridge plates such as BP-8/-9. Compatible with following Canon Cameras: Canon EOS C200 (with additional Adapter Plate for Canon C200), Canon EOS C300, Canon EOS C300 MkII, Canon EOS C500.



Ident Nr	Product Description	Weight & Dimensions (W × H × D)	Price

Support for Canon EOS C300MkIII/ C500 MkII

K2.0033439	**Plate for Canon C300 MkIII/ C500 MkII**	893 g · 250 × 140 × 100 mm	~~€1.270~~ **€830** NEW PRICE

The Plate for C300 MkIII/ C500 MkII can be used either shoulder mounted compatible with a VCT-14 style plate such as the QRP-1 or by using the Bridge Plate Adapter BPA-5 to mount the cine-style BP-8, BP-9 or BPS-2. Both versions can be changed easily to the front and the back by sliding and exchanging one against the other without the need to detach any accessories from the camera. The plate includes an interface for two 15mm rods at the front and an optional 15mm lightweight support at the back.



K2.0033441	**Top Plate for Canon C300 MkIII/ C500 MkII**	260 g · 130 × 30 × 140 mm	~~€400~~ **€250** NEW PRICE

The Top Plate for C300 MkIII/ C500 MkII offers a variety of 1/4-20; 3/8-16 and M4 threads for additional accessory support such as the RMB-3, CCH-4 (CCH-4 Sliding Adapter option) or CCH-2. An integrated optically centered 15mm lightweight support interface allows to mount 15mm rods or the Mini Viewfinder Bracket MVB-1 (K2.0006140). The C500 MkII monitor (via the Monitor Bracket for Canon C200 K2.0015520) or Canons C700 EVF (via K2.0013195 EVF bracket for C700) can be attached to the MVB-1.



K2.0037183	**Side Bracket Right for C300 MkIII/ C500 MkII**	113 g · 60 × 180 × 50 mm	~~€230~~ **€150** NEW PRICE

The Side Bracket Right has been adapted to the geometry and controls of the camera. It offers additional stability and interfaces such as 3/8-16, 1/4-20, RMB-3 and for the Canon Microphone bracket. It is compatible with the rosette adapters RA-6.



K2.0037185	**Side Bracket Left for C300 MkIII/ C500 MkII**	94 g · 60 × 180 × 40 mm	~~€230~~ **€150** NEW PRICE

The Side Bracket Left has been adapted to the geometry and controls of the camera. It offers additional stability and interfaces such as 3/8-16, 1/4-20 and RMB-3. It is compatible with the rosette adapters RA-6.



Support for Canon EOS C400

K2.0051221	**Top Plate for Canon EOS C400**	271 g · 114 × 19 × 136 mm	~~€490~~ **€330** NEW PRICE

Two-part design compatible with the following top handles:
Canon's C400 camera grip, CCH-4.

Compatible with K2.65264.0 15mm LWS Rod Console at the front to use rods.
Multiple interfaces (ARRI Pin Lock 3/8 and 1/4 inch; M4).
Includes interfaces for the side brackets left and right.
ARRI Multi-Hex screws implemented.



K2.0051222	**Side Bracket Left for Canon EOS C400**	84 g · 58 × 40 × 163 mm	~~€350~~ **€210** NEW PRICE

Offers protection and the possibility to attach accessories.
NATO Rail included with safety release mechanism.
Provides multiple interfaces (NATO rail, ARRI Pin Lock 3/8 and 1/4 inch). ARRI Multi-Hex screws implemented.
Top and bottom plate is necessary for mounting the side bracket.



Ident Nr	Product Description	Weight & Dimensions (W × H × D)	Price
K2.0051223	**Side Bracket Right for Canon EOS C400**	89 g · 58 × 49 × 163 mm	~~€350~~ **€280** NEW PRICE
	Offers protection and the possibility to attach accessories. NATO Rail included with safety release mechanism. Provides multiple interfaces (NATO rail, ARRI Pin Lock 3/8 and 1/4 inch). ARRI Multi-Hex screws implemented. Top and bottom plate is necessary for mounting the side bracket.		
K2.0051224	**Rear Side Bracket Right for Canon EOS C400**	76 g · 51 × 50 × 163 mm	~~€350~~ **€240** NEW PRICE
	Offers protection (for the viewfinder plug) and the possibility to attach accessories. NATO Rail included with safety release mechanism. Provides multiple interfaces (NATO rail, ARRI Pin Lock 3/8 and 1/4 inch). ARRI Multi-Hex screws implemented.		
K2.0051262	**Plate for Canon EOS C400**	352 g · 113 × 42 × 123 mm	~~€590~~ **€350** NEW PRICE
	The Plate comes with two integrated 15mm lightweight supports (at the front and the back) and is compatible with the BPA-5 (K2.0017138) and the BSA-1 (K2.0043749). This plate offers a pair of M4 threads on each side to attach the side brackets left and right.		

Support for Canon EOS C700

K2.0013191	**Plate for Canon C700**	1110 g · 270 × 140 × 60 mm	~~€1.140~~ **€320** NEW PRICE
	The ARRI Plate for Canon C700 is an hybrid support that is well-suited to common rental setups using studio bridge plates such as the BP-8 or BP-9, as well as documentary setups using VCT-style base plates like the ARRI QRP-1.		
K2.0013229	**Top Plate for Canon C700**	330 g · 230 × 120 × 30 mm	~~€455~~ **€250** NEW PRICE
	The ARRI Top Plate for Canon C700 is a low-mode support, featuring numerous accessory threads and a built-in console for 15 mm LWS rods.		

Support for Fujifilm GFX Eterna 55

K2.0055230	**Top Plate for ETERNA 55**	220 g · 84 × 122 × 19 mm	~~€330~~ **€230** NEW PRICE
	Classic cheese plate top plate with integrated dovetail interface for secure camera mounting. Multiple 3/8"-16 and 1/4"-20 threaded mounting points with ARRI Pin-Lock interfaces for secure and twist-free accessory attachment, M4 threads with 20 mm spacing, and dedicated RMB-3 interfaces for rod mounting (15 mm/19 mm). Fully compatible with the ARRI CCH-4 top handle and ARRI Adjustable Top Plate for MöVi, enabling seamless gimbal integration without additional adapters. Compatible with Fujifilm GFX ETERNA 55 camera.		

Ident Nr	Product Description	Weight & Dimensions (W × H × D)	Price
K2.0055235	**Side Bracket for ETERNA 55**	55 g · 22 × 153 × 21 mm	~~€270~~ **€100** NEW PRICE

Side bracket for the left and right sides of the camera body, providing protection and multiple accessory mounting options.
NATO rail included with safety release mechanism.
Provides multiple interfaces (NATO rail, ARRI Pin-Lock 3/8"-16 and 1/4"-20 threads).
Equipped with ARRI Multi-Hex (reduced Multi-Hex 3/4) screws.
Mounted using one screw to the Top NATO Rail and two screws to the Base Plate – all three screws are captive.
The Top NATO Rail and Base Plate are required for proper installation of the side brackets.
When used in combination with the Top NATO Rail, the side brackets provide integrated cable routing and strain relief.
Compatible with Fujifilm GFX ETERNA 55 camera.



K2.0055237	**Top NATO Rail for ETERNA 55**	75 g · 45 × 113 × 21 mm	~~€230~~ **€160** NEW PRICE

The Top NATO Rail for ETERNA is a top-mounted NATO rail designed to offer a mounting option for the NRC-1.
When used in combination with the side brackets, it provides integrated cable routing and strain relief.
The Top NATO Rail serves as an integrated stopper for the native Fujifilm camera handle and top plate, maintaining full NATO rail functionality and allowing smooth, unobstructed travel when using ARRI NATO components such as the NRC-1. It is also compatible with the ARRI CTH-2 top handle, enabling full 360° rotation.
Compatible with Fujifilm GFX ETERNA 55 camera.



K2.0055362	**Rear Side Bracket Right for ETERNA 55**	55 g · 29 × 129 × 34 mm	~~€290~~ **€230** NEW PRICE

Offers protection and the possibility to attach accessories.
NATO rail included with safety release mechanism.
Provides multiple interfaces (NATO rail, ARRI Pin-Lock 3/8"-16 and 1/4"-20 threads).
Mounted directly to the camera body using two M3 (Hex 3) screws and two dowel pins.
Includes an additional 1/4"-20 UNC thread that can be used either as a mounting interface or for securing a cable tie to provide cable strain relief.
Compatible with Fujifilm GFX ETERNA 55 camera



Support for Panasonic AU-EVA1

K2.0015880	**Top Plate for Panasonic EVA1**	255 g · 150 × 110 × 30 mm	~~€290~~ **€80** NEW PRICE

The ARRI Top Plate for Panasonic AU-EVA1 is a lightweight support featuring numerous accessory threads and a built-in console for 15 mm LWS rods.



K2.0015883	**Plate for Panasonic EVA1**	1127 g · 260 × 60 × 140 mm	~~€1.090~~ **€320** NEW PRICE

The ARRI plate for Panasonic AU-EVA1 is a hybrid support with 15mm LWS Base Plate and comfortable shoulder pad. The plate works perfectly with BP-8 or BP-9 and also with VCT-style tripod adapters such as the QRP-1.



Ident Nr	Product Description	Weight & Dimensions (W × H × D)	Price
K2.0016711	**Handgrip Adapter HGA-3**	143 g · 120 × 70 × 40 mm	~~€370~~ **€250** NEW PRICE

The handle adapter allows to attach the Panasonic AU-EVA1 handgrip at a handgrip extension. This allows to extend the distance between camera and handle. Using the HGA-3 requires a longer, separately sold 3rd party LANC cable.



Support for RED DSMC2

K2.0008903	**Top Handle for RED DSMC2**	296 g · 99 × 75 × 146 mm	~~€150~~ **€90** NEW PRICE

The ARRI Handle for RED DSMC2 features an integrated 15 mm LWS rod console for the mounting of accessories. A handy monitor bracket allows the camera monitor to be repositioned on top-mounted 15 mm LWS rods.



K2.0009582	**Monitor Bracket for RED DSMC2**	64 g · 110 × 30 × 20 mm	~~€160~~ **€100** NEW PRICE

The monitor bracket allows the camera monitor to be repositioned on top-mounted 15 mm LWS rods.



K2.0009614	**Broadcast Plate for RED DSMC2**	1070 g · 250 × 140 × 90 mm	~~€1.060~~ **€670** NEW PRICE

The ARRI Broadcast Plate for RED DSMC2 is a documentary-style baseplate compatible with VCT-style plates such as the ARRI QRP-1.



Support for Sony BURANO

K2.0049751	**Top Plate for Sony BURANO**	257 g · 98 × 21 × 157 mm	~~€480~~ **€300** NEW PRICE

Two-part design compatible with the following top handles:
Burano, FX9, CCH-4.
Compatible with K2.65264.0 15mm LWS Rod Console at the front to use rods.
Focus hook and cable guide from the BURANO can be mounted on the top plate.
Multiple interfaces (ARRI Pin Lock 3/8 and ¼ inch; M4).
Includes interfaces for the side brackets left and right.
ARRI Multi-Hex screws implemented.



K2.0049816	**Side Bracket Left for Sony BURANO**	75 g · 50 × 30 × 170 mm	~~€240~~ **€160** NEW PRICE

Offers protection and the possibility to attach accessories.
NATO Rail included with safety release mechanism.
Provides multiple interfaces (NATO rail, ARRI Pin Lock 3/8 and ¼ inch).
ARRI Multi-Hex screws implemented.
Top and bottom plate is necessary for mounting the side bracket.



Ident Nr	Product Description	Weight & Dimensions (W × H × D)	Price
K2.0049819	**Side Bracket Right for Sony BURANO** Offers protection and the possibility to attach accessories. NATO Rail included with safety release mechanism. Provides multiple interfaces (NATO rail, ARRI Pin Lock 3/8 and ¼ inch). ARRI Multi-Hex screws implemented. Top and bottom plate is necessary for mounting the side bracket.	81 g · 50 × 30 × 170 mm	~~€240~~ **€160** NEW PRICE
KK.0050113	**Basic Cine Set for Sony BURANO** Includes: K2.0049751 1x Top Plate for Sony BURANO K2.0043726 1x Plate for Sony Venice 1/2 K2.0017138 1x Bridge Plate Adapter BPA-5 K2.65264.0 1x 15mm LWS Rod Console K2.66253.0 1x Support Rods 240mm/9.4in, 15mm		~~€1.435~~ **€960** NEW PRICE
KK.0050114	**Basic Broadcast Set for Sony BURANO** Includes: K2.0049751 1x Top Plate for Sony BURANO K2.0043726 1x Plate for Sony Venice 1/2 K2.0043749 1x Broadcast Shoulder Adapter BSA-1 K2.65264.0 1x 15mm LWS Rod Console K2.66253.0 1x Support Rods 240mm/9.4in, 15mm		~~€1.950~~ **€1.390** NEW PRICE
KK.0050116	**Pro Broadcast Set for Sony BURANO** Includes: K2.0049751 1x Top Plate for Sony BURANO K2.0043726 1x Plate for Sony Venice 1/2 K2.0049819 1x Side Bracket Right for Sony BURANO K2.0049816 1x Side Bracket Left for Sony BURANO K2.0049904 1x Rear Side Bracket Right for Sony BURANO K2.0047776 1x NATO Rail Clamp NRC-1 K2.0048324 1x NATO Rail Clamp NRC-2 K2.0017270 1x Center Camera Handle CCH-4 K2.0043749 1x Broadcast Shoulder Adapter BSA-1 K2.66255.0 2x 15mm Reduction Insert K2.65264.0 1x 15mm LWS Rod Console K2.66253.0 1x Support Rods 240mm/9.4in, 15mm K2.0006186 1x Rod Mounting Bracket RMB-3		~~€3.300~~ **€1.800** NEW PRICE

Support for Sony Venice

KK.0017142	**Pro Set for Sony Venice**		~~€1.560~~ **€1.315** NEW PRICE

Ident Nr	Product Description	Weight & Dimensions (W × H × D)	Price

Support for Sony Venice Extension Unit 1/2

K2.0024564	**Base Plate for Venice Ext. Unit**	240 g · 120 × 80 × 40 mm	~~€440~~ **€290** NEW PRICE

The Base Plate for the Venice Extension Unit is compatible with the BPA-5 and the ENG-style shoulder bottom part from the plate for Sony Venice. Like with the Sony Venice both can be easily attached by sliding them on and off from front or back. The release button is accessible from both sides. 15mm lightweight rod support standard is integrated.

Compatible with Extension Unit (Rialto) 1 and 2.



K2.0024566	**Side Bracket Right for Venice Ext. Unit**	67 g · 147 × 49 × 19 mm	~~€160~~ **€100** NEW PRICE

The Side Bracket Right offers plenty of interfaces (1/4-20; 3/8-16 with anti-twist pin holes; RMB-3; RA-6, Wooden Handgrip WHG-1, Cable Clamp and for the base plate to be used for vertical shooting).

Compatible with Extension Unit (Rialto) 1 and 2.



K2.0024569	**Cable Clamp for Venice Ext. Unit**	28 g · 50 × 40 × 30 mm	~~€130~~ **€80** NEW PRICE

The Cable Clamp works as a strain-relief for the cable which connects the Extension Unit to the Venice camera body and recording unit. It is compatible with the Side Bracket Right.

Compatible with Extension Unit (Rialto) 1 and 2.



K2.0024573	**Back Plate for Venice Ext. Unit**	46 g · 80 × 40 × 20 mm	~~€110~~ **€70** NEW PRICE

The Back Plate can be mounted either at the top or at the bottom of the back and it is also compatible with the Repeater Unit (an extension cable) for either horizontal or vertical attachment.
It offers plenty of interfaces (1/4-20; 3/8-16 with anti-twist pin holes).

Compatible with Extension Unit (Rialto) 1 and 2.



K2.0024761	**Side Bracket Left for Venice Ext. Unit**	75 g · 147 × 50 × 19 mm	~~€160~~ **€100** NEW PRICE

The Side Bracket Right offers plenty of interfaces (1/4-20; 3/8-16 with anti-twist pin holes; RMB-3; RA-6, Wooden Handgrip WHG-1 and for the base plate to be used for vertical shooting).

Compatible with Extension Unit (Rialto) 1 and 2.



K2.0047941	**Back Plate 2 for Venice Ext. Unit**	114 g · 80 × 30 × 30 mm	~~€98~~ **€70** NEW PRICE

The Back Plate 2 can be used as a single part or as an adapter to attach the Back Plate to it. When used in combination with the Back Plate, the rear body of the Extension Unit 2 is at the same level as the Back Plate. This allows more flexibility when attaching accessories.

Compatible with Extension Unit (Rialto) 1 and 2.



Ident Nr	Product Description	Weight & Dimensions (W × H × D)	Price

Support for Sony FS7II/FX9

K2.0003899	**Lens Adapter Support LAS-1**	30 g · 70 × 50 × 40 mm	~~€105~~ **€70** NEW PRICE
	The LAS-1 is an optional solution that offers sturdy support to an extensive range of third party lens adapters with pillar support e.g., PL or EF. Some optical adapters such as the Metabones Speedbooster are also supported.		
K2.0034709	**Side Bracket Right for Sony FS7II/FX9**	12 g · 170 × 60 × 50 mm	~~€240~~ **€150** NEW PRICE
	The side bracket has been adapted to the geometry and controls of the camera. It offers additional stability, additional 3/8 interfaces and a RA-6 interface.		
K2.0035830	**Plate for Sony FS7II/FX9**	810 g · 260 × 140 × 50 mm	~~€810~~ **€320** NEW PRICE
	The Plate for Sony FS7II/FX9 with integrated 15mm lightweight support and a comfortable shoulder pad can be adjusted for perfect balancing. The plate is compatible with VCT-style tripod adapters such as the QRP-1 from ARRI or BP-8, BP-9 and BPS-2. The optional Lens Adapter Support LAS-1 (K2.0003899) offers the possibility to support lens adapters from below.		
K2.66249.0	**Shoulder Pad for Sony F5/F55/FS7II/FX9**	202 g · 117 × 25 × 83 mm	~~€150~~ **€100** NEW PRICE
	This shoulder pad is compatible with the plates for Sony FX9, F5, F55 and FS7II cameras via a hand screw.		

Support for Sony PMW F5/F55

K2.66251.0	**VF Plug Protection for Sony PMW F5/F55**	33 g · 70 × 32 × 24 mm	~~€90~~ **€45** NEW PRICE
	Protection for Viewfinder Plug do avoid damage. Viewfinder Plug Protection needs to be mounted to the Top Plate for Sony PMW F5/F55.		

Ident Nr	Product Description	Weight & Dimensions (W × H × D)	Price

Bridge Plates

K2.66260.0	**Bridge Plate Sled BPS-2**	246 g · 12 × 12 × 26 mm	~~€370~~ **€240** NEW PRICE

The Bridge Plate Sled BPS-2 is a lightweight alternative to a studio bridge plate when a bottom plate is useful for better balancing but studio rods are not needed. Compatible with most 3rd party ARRI accessories sharing the same BP-8/ BP-9 interface.



Bottom Dovetail Plates

K2.0000323	**Bottom Dovetail Plate 600mm/24in**		~~€350~~ **€32** NEW PRICE

Generation 1



K2.0000437	**Rod Support Bracket, RSB-15**	300 g · 120 × 20 × 16 mm	~~€150~~ **€100** NEW PRICE

An additional 15mm rod support when using long rods with heavy zoom lenses to prevent rods from flexing.



K2.0000440	**Rod Support Bracket, RSB-19**	310 g · 130 × 20 × 16 mm	~~€150~~ **€100** NEW PRICE

An additional 19mm rod support when using long rods with heavy zoom lenses to prevent rods from flexing.



Quick Release Baseplates

K2.0000399	**QRP-1-Baseplate**	600 g · 290 × 80 × 30 mm	~~€780~~ **€490** NEW PRICE

VCT-style broadcast plate compatible with the ARRI AMIRA camera, most of ARRI PCA support systems as well as ENG cameras.



K2.47798.0	**19mm Support Rod Holder**	221 g · 40 × 155 × 35 mm	~~€660~~ **€395** NEW PRICE

With adjustable rod centering for all common digital cameras. Only compatible with QR-HD Cine Base Plate.



Ident Nr	Product Description	Weight & Dimensions (W × H × D)	Price
K2.47799.0	**15mm Support Rod Holder**	194 g · 45 × 145 × 35 mm	~~€625~~ **€375** NEW PRICE
	With adjustable rod centering for all common digital cameras. Only compatible with QR-HD Cine Base Plate.		

Lens Support

K2.0047386	**LLS-1 Pin Small**	12 g · 12 × 28 × 12 mm	~~€50~~ **€30** NEW PRICE
	The new LLS-1 Pin Small (28 mm) is about half the length of the LLS-1 Pin (43 mm). It can be used alone or in combination with the LLS-1 pin to extend it. This increases the possibilities of the Lightweight Lens Support LLS-1 having either a small, a medium, or a long support pin by connecting both.		

Top Handle Support

K2.0001017	**Handle Extension Block long, HEB-3**	143 g · 118 × 30 × 20 mm	~~€240~~ **€160** NEW PRICE
	Attaches to the ALEXA Center Camera Handle (CCH-1) or any 3/8-16 UNC threaded mounting point. Includes 3x 3/8-16 UNC threaded mounting points.		
K2.0034248	**Bicycle Grip Adapter BGA-1**	147 g · 20 × 150 × 30 mm	~~€175~~ **€110** NEW PRICE
	The BGA-1 adapter offer the possibility to securely attach common bicycle grips with a standard inner diameter of 22 mm/ 0.87" and a length of up to 136 mm. This allows you to choose the material and ergometry of the handle according to your own requirements. A counter screw at the rear end prevents the bicycle handle from accidentally slipping off. The BGA-1 comes with a 3/8-16 screw/two anti-twist pins at the front and 3/8-16 thread with anti-twist pin hole interface at the rear and works very well with ARRI`s Handle Extions System HEX. If you like to have a Bicycle Grip Adapter with ARRI Rosette, please order BGA-2 (K2.0036623). Note: ARRI does not offer bicycle handles. These have to be purchased separately.		
K2.0038176	**CCH-2 Support**	75 g · 46 × 58 × 104 mm	~~€130~~ **€85** NEW PRICE
	The CCH-2 Support offers the possibility to convert the CCH-2 from an open to a closed camera top handle by using one of the five different Handle Extensions (HEX-1 to HEX-5). When using multiple Handle Extensions at the back, the CCH-2 support increases the rigidity of the CCH-2. It can be mounted in different positions in order to offer more or less space for the hand below the CCH-2. Note: The CCH-2 Support is only compatible with the MAP-2 and MAP-2A.		

Ident Nr	Product Description	Weight & Dimensions (W × H × D)	Price

Handgrips and Shoulder Support

K2.0002355	**Lightweight Bridge Support LBS-3**	100 g · 120 × 50 × 40 mm	~~€200~~ **€130** NEW PRICE
	The LBS-3 offers a single rosette connection for one handgrip when using lightweight rod support standard for handheld set. In comparison to the still existing LBS-2 it is more than 50% lighter (100g).		
K2.0012911	**Handgrip Extension 160mm**	190 g · 40 × 200 × 50 mm	~~€330~~ **€200** NEW PRICE
	Stainless steel handgrip extension compatible with rosette-based systems, such as Master Grips.		
K2.0012913	**Handgrip Extension 80mm**	138 g · 40 × 120 × 50 mm	~~€310~~ **€210** NEW PRICE
	Stainless steel handgrip extension compatible with rosette-based systems, such as Master Grips.		
K2.0012921	**Cable Clip 15mm**	5 g · 44 × 17 × 27 mm	~~€21~~ **€10** NEW PRICE
	Facilitates cable management around Master Grips and lens motors. Clips on 15mm camera rods and Master Grips extensions.		
K2.0013615	**Extension Spacer 50mm**	87 g · 57 × 35 × 35 mm	~~€190~~ **€160** NEW PRICE
	Offsets ARRI rosettes. The Extension Spacer can be locked on the camera rig without a tool.		
K2.0016317	**Standard Grip Left SGL-1**	253 g · 255 × 125 × 170 mm	~~€720~~ **€650** NEW PRICE
	Lightweight and durable ergonomic handgrip with a build in standard ARRI rosette. It can be attached by hand without using a tool.		

Ident Nr	Product Description	Weight & Dimensions (W × H × D)	Price
K2.0016318	**Standard Grip Right SGR-1**	253 g · 255 × 125 × 170 mm	~~€720~~ **€650** NEW PRICE
	Lightweight and durable ergonomic handgrip with a build in standard ARRI rosette. It can be attached by hand without using a tool.		
K2.0024965	**Wooden Handgrip WHG-1**	130 g · 110 × 50 × 50 mm	~~€98~~ **€65** NEW PRICE
	The Wooden Handgrip is known from ARRI´s SXU-1. Compatible with Sony Venice Ext. Unit Side Bracket (left and right).		
K2.46450.0	**Shoulder Set S-2 for BP-3, BP-5**	1600 g · 400 × 390 × 120 mm	~~€2.520~~ **€1.880** NEW PRICE
	Includes shoulder cushion, left and right grips with run/stop switch via ARRI standard RS 3-pin connector.		
K2.47093.0	**Shoulder Set S-4 for BP-8, 9,12,13**	1500 g · 390 × 350 × 120 mm	~~€2.210~~ **€1.410** NEW PRICE
	The handgrip set S-4 can be attached directly to the bottom of most classic ARRI cameras, the ALEXA via the bridge plate adapter BPA-1/2 and also the AMIRA via its baseplate BPA-3. The S-4 can also be swiftly mounted to the bottom of all ARRI bridge plates such as BP-8/9 and BP-12/13, for quick transition from tripod to shoulder.		
K2.47136.0	**Extension Tube for Handgrip**	71 g · 60 × 30 × 30 mm	~~€160~~ **€100** NEW PRICE
	A short aluminum rod that attaches between camera body and handgrip to move the handgrip further away (left or right) from the camera body.		
K2.47861.0	**Handgrip without on/off switch**	118 g · 160 × 40 × 40 mm	~~€190~~ **€120** NEW PRICE
	Only for mechanical use - without RS cable.		

Ident Nr	Product Description	Weight & Dimensions (W × H × D)	Price
K2.47862.0	**Handgrip with on/off switch RS-3 pin**	198 g · 175 × 70 × 40 mm	~~€460~~ **€355** NEW PRICE
	With RS 3-Pin connector. Cables with other connectors available. Approx. cable lenght: 800 mm.		
K2.47863.0	**Handgrip Extension, long**	177 g · 40 × 185 × 40 mm	~~€295~~ **€210** NEW PRICE
	To extend handgrip parallel to camera body.		
K2.66278.0	**Handgrip with on/off switch Hirose 4-pin**	198 g · 165 × 70 × 40 mm	~~€460~~ **€280** NEW PRICE
	The handgrip with integrated cable for triggering the Sony F5/F55 and Panasonic VariCam 35/HS, using the 4-pin Hirose connector could be used on ARRI standard rosette interfaces.		

Recorder/Battery Bracket

K2.0006471	**Battery Adapter Plate BAP-1**	230 g · 180 × 120 × 30 mm	~~€400~~ **€240** NEW PRICE
	The battery plate allows industry standard battery mounts such as V-mount and Gold Mount to fit to 15mm LWS rods. The battery plate can be offset in order to clear rear card slots or optimise balance.		

Support Rods 15 mm

K2.0001031	**Support Rods 440mm/17.3in, 15mm**	666 g · 440 × 30 × 15 mm	~~€180~~ **€110** NEW PRICE
	One pair 15 mm, stainless steel.		

Support Rods 19 mm

K2.0014954	**Single Support Rod 340mm/13.4in, 19mm**		~~€79~~ **€50** NEW PRICE
	Single Support rod made of carbon fibre, black.		

Ident Nr	Product Description	Weight & Dimensions (W × H × D)	Price
K2.0014959	**Single Support Rod 540mm/21.3in, 19mm**		~~€96~~ **€65** NEW PRICE
	Single Support rod made of carbon fibre, black.		
K2.72028.0	**Support Rods 540mm/21.3in, 19mm**	890 g · 540 × 38 × 19 mm	~~€225~~ **€130** NEW PRICE
	One pair 19 mm, stainless steel.		

Mounting Hardware

K2.0016751	**Accessory Rail Small ARS-1**	23 g · 30 × 20 × 20 mm	~~€90~~ **€65** NEW PRICE
	The ARS-1 shares the same rail interface as the SMB and the LMB Accessory Adapter. Two ball-pressure pieces on each side of the rail prevent an attached Accessory Rail Bracket ARB-1 from slipping off. It is compatible with all 3/8-16 interfaces which offer holes for the two securing pins. Uniquely, four different sizes of hex key can be used with the Accessory Rail Small without having to adjust it - 3,4, 5 and 5/32 will all fit perfectly. Length: 30mm/1.18"		
K2.0024563	**Rosette Adapter RA-5**	58 g · 40 × 63 × 26 mm	~~€150~~ **€95** NEW PRICE
	The Rosette Adapter RA-5 adapts a 3/8-16 anti twist interface to a 90° rotated rosette. Both pins can be unscrewed if necessary and stored in a parking position on the side of the bracket. The RA-5 can be mounted without tools by using the wing nut.		
K2.0033852	**Accessory Rail Cube ARC-1**	38 g · 40 × 40 × 30 mm	~~€120~~ **€80** NEW PRICE
	The Accessory Rail Cube ARC-1 can be used on the SMB and LMB Accessory Adapter as well as on the Accessory Rails ARC-1, ARC-2 and ARC-3. It can be locked off by turning the lever 90°. Accessories - such as an articulating arm or a Cinetape - can be mounted on four integrated 3/8-16" interface, which offers aight different holes for securing pins.		
K2.0034009	**Accessory Rail Small ARS-2**	32 g · 55 × 20 × 20 mm	~~€130~~ **€95** NEW PRICE
	The ARS-2 shares the same rail interface as the SMB and the LMB Accessory Adapter. Two ball-pressure pieces on each side of the rail prevent an attached Accessory Rail Bracket ARB-1 or the ARC-1 from slipping off. It is compatible with all 3/8-16" interfaces which offer holes for the two securing pins. A slotted hole extends the application area and allows it to move the rail into the desired position. Uniquely, four different sizes of hex key can be used with the Accessory Rail Small-2 without having to adjust it - 3, 4, 5 and 5/32 will all fit perfectly.		

Ident Nr	Product Description	Weight & Dimensions (W × H × D)	Price
K2.0034278	**Accessory Rail Small ARS-3**	40 g · 90 × 20 × 20 mm	~~€125~~ **€85** NEW PRICE
	The ARS-3 shares the same rail interface as the SMB and the LMB Accessory Adapter. Two ball-pressure pieces on each side of the rail prevent an attached Accessory Rail Bracket ARB-1 or the ARC-1 from slipping off. It is compatible with all 3/8-16" interfaces which offer holes for the two securing pins. A slotted hole extends the application area and allow it to move the rail into the desired position. Uniquely, four different sizes of hex key can be used with the Accessory Rail Small-3 without having to adjust it - 3,4, 5 and 5/32 will all fit perfectly.		
K2.52080.0	**Adapter UMC 3/8in**	81 g · 90 × 40 × 20 mm	~~€620~~ **€435** NEW PRICE
	26mm dovetail insert. Both sides attach to 3/8-16 UNC thread mounting points having standard ARRI 15,5mm counterbore for attaching and quickly removing accessories from a camera (compatible with all UMC versions). Includes: K2.52082.0 1x Dovetail Insert 3/8in thread K2.52083.0 1x Dovetail Shoe 3/8in thread		
K2.52083.0	**Dovetail Shoe 3/8in thread**	30 g · 45 × 35 × 10 mm	~~€170~~ **€120** NEW PRICE
	All purpose 26mm dovetail shoe. Can be attached to 3/8-16 thread mounting points having standard ARRI 15,5mm counterbore. For use with 26mm dovetail inserts.		
K2.52153.0	**WHA-2 Rosette Bracket**	355 g · 70 × 205 × 135 mm	~~€1.400~~ **€980** NEW PRICE
	Bracket with 26 mm dovetail (insert side) interface on 15 mm rod, attaches to ARRIHEAD rosette, can be pivoted on rosette or slid along rod. For use with 26 mm shoe-mounted accessories such as UMC-3 K2.52080.0 1x Adapter UMC 3/8in K2.52083.0 1x Dovetail Shoe 3/8in thread or Wired Handgrip Attachments WHA-2 / WHA-3.		
K2.65020.0	**Universal Mounting Arm UMA-120**	317 g · 205 × 135 × 70 mm	~~€350~~ **€245** NEW PRICE
	Articulated accessory holder arm for attaching accessories with 3/8-16 UNC mounting points to cameras with 3/8-16 mounting points. 120 mm /4.7 inch long, with two swivel ball joints and one elbow joint. Has combination fastener system for use with plain. Dimensions: 5.3"x 8" x 0.9"/ 0.7 lbs		
K2.65269.0	**Rosette Adapter, RA-2, pair**	104 g · 32 × 32 × 34 mm	~~€350~~ **€190** NEW PRICE
	Converts a 3/8-16 anti twist pin interface into an ARRI standard rosette.	 	

Ident Nr	Product Description	Weight & Dimensions (W × H × D)	Price
K2.66174.0	**Rosette Adapter, RA-1, pair**	204 g · 32 × 32 × 66 mm	~~€330~~ **€190** NEW PRICE
	Converts a 3/8-16 anti twist pin interface into an ARRI standard rosette.		
KK.0013225	**Rod Mounting Bracket RMB-4 Set**		~~€240~~ **€150** NEW PRICE
	Single rod bracket for 19mm rods (15mm rods with supplied insert) mounting to AMIRA body (top/right). Optimized for camera stabilizer systems and lens motors. Compatible with original AMIRA handle and viewfinder bracket. Includes: K2.66255.0 1x 15mm Reduction Insert K2.0013007 1x Rod Mounting Bracket RMB-4		

Electronic Viewfinder Brackets and Sets

K2.0008624	**EVF Bracket for Zacuto Gratical**	60 g · 68 × 60 × 21 mm	~~€250~~ **€180** NEW PRICE
	The bracket for Zacuto Gratical EVF electronic viewfinder provides a design-specific interface to the traditional ARRI viewfinder support. Also compatible with Zacuto Gratical Eye.		
K2.0008955	**EVF Bracket for Canon Monitor Unit**	70 g · 40 × 20 × 55 mm	~~€230~~ **€150** NEW PRICE
	This bracket connects the Canon Monitor Unit to the traditional ARRI viewfinder mount, in order to benefit from the same ease of repositioning as a traditional electronic viewfinder.		
K2.0013195	**EVF Bracket for Canon EVF-V70**	49 g · 70 × 40 × 20 mm	~~€220~~ **€140** NEW PRICE
	The viewfinder bracket for the Canon EVF-V70 replaces the original bracket from Canon mounted on their viewfinders. It is compatible with ARRI`s viewfinder mounting bracket MVB-1. Canon`s EVF-V70 works with C200 and C500 MkII.		
K2.0016259	**Monitor Bracket for Panasonic AU-EVA1**	168 g · 150 × 50 × 40 mm	~~€230~~ **€160** NEW PRICE
	The Bracket attaches the AU-EVA1 Monitor via 15mm LWS rods and a monitor mount.		

Ident Nr	Product Description	Weight & Dimensions (W × H × D)	Price
K2.0021525	**EVF Bracket for Sony DVF-EL200 (Venice)**	38 g · 70 × 40 × 20 mm	~~€270~~ **€170** NEW PRICE
	Viewfinder Bracket for Sony Viewfinder DVF-EL200 (Venice). It is compatible with ARRI`s viewfinder mounting bracket MVB-1.		

Eyepiece Leveller

KK.0005723	**Eyepiece Leveller EL-3 Set**		~~€610~~ **€390** NEW PRICE
	Includes: K2.47767.0 1x Eyepiece Leveler EL-3, levelling rod K2.47768.0 1x Sachtler Fluid Head Adapter Kit for EL-3		

Studio Follow Focus FF-4

K2.47500.0	**FF-4 Adapter for Studio 15mm, BA-3**	160 g · 169 × 100 × 30 mm	~~€505~~ **€340** NEW PRICE
	Snaps on rods from above, for 15 mm studio support rods.		
K2.65224.0	**FF-4 Adapter for Studio 19mm, BA-2**	165 g · 160 × 100 × 30 mm	~~€480~~ **€320** NEW PRICE
	Snaps on rods from above, for 19 mm studio support rods.		
KK.0005745	**Follow Focus FF-4 Set 19mm, black**		~~€4.260~~ **€2.880** NEW PRICE
	Includes: K2.65221.0 1x Follow Focus FF-4, Basic Unit, black K2.65224.0 1x FF-4 Adapter for Studio 19mm, BA-2 K2.65276.0 1x FF Gear 0.8 Mod, 35 Tooth, 10mm K2.32730.0 1x Focus Lever Speed Handle/Focus Crank K2.32701.0 4x Marking Disk, Flat K2.44965.0 1x Case for FF-3/-4/-5 incl. Accessories		

Ident Nr	Product Description	Weight & Dimensions (W × H × D)	Price

Focus Knobs

K2.47215.0	**Standard Focus Knob, Right**	220 g · 130 × 100 × 100 mm	~~€730~~ **€380** NEW PRICE
	Modified for soft stops with fingers. Includes: K2.32701.0 1x Marking Disk, Flat		
K2.65253.0	**Standard Focus Knob, left**	182 g · 150 × 150 × 80 mm	~~€460~~ **€230** NEW PRICE
	Modified for soft stops with fingers. Includes: K2.32701.0 1x Marking Disk, Flat		

Marking Disks for Follow Focus

K2.32701.0	**Marking Disk, Flat**	25 g · 115 × 5 × 115 mm	~~€26~~ **€10** NEW PRICE
	For Standard or 2-speed Focus Knobs, Wireless Compact Unit WCU-3.		
K2.47248.0	**Marking Disk, Beveled**	24 g · 120 × 110 × 15 mm	~~€45~~ **€25** NEW PRICE
	For Standard or 2-speed Focus Knobs, Wireless Compact Unit WCU-3.		
K2.65162.0	**Marking Disk, Cylindrical**	30 g · 120 × 170 × 15 mm	~~€90~~ **€50** NEW PRICE
	for Wireless Compact Unit WCU-3		
K4.47621.0	**Marking Disk, Beveled**	19 g · 80 × 80 × 9 mm	~~€30~~ **€25** NEW PRICE
	For WFU-3 and Hard Stop Focus Knob left and right (K2.65248.0).		

Ident Nr	Product Description	Weight & Dimensions (W × H × D)	Price

Follow Focus Accessories

K2.44965.0	**Case for FF-3/-4/-5 incl. Accessories**	4500 g · 400 × 180 × 330 mm	~~€730~~ **€350** NEW PRICE



K2.66131.0	**Zip Gear**	250 g · 220 × 150 × 13 mm	~~€150~~ **€95** NEW PRICE

Universal gearing for photo lenses and pin for manual focusing, zooming or as a support with LS-11.



Follow Focus Gears

K2.47557.0	**FF Gear 0.8 Mod, 35 Tooth, 25mm**	27 g · 35 × 30 × 30 mm	~~€270~~ **€160** NEW PRICE

Module Gear for smaler prime lenses and 16 mm zooms.



K2.65102.0	**FF Gear 0.8 Mod, 64 Tooth, 6mm**	21 g · 50 × 50 × 15 mm	~~€290~~ **€260** NEW PRICE

Gear for larger prime lenses or for higher transmission ratio on FF5 HD with larger lenses.



Mini Matte Box MMB-2

K2.66093.0	**Top Flag for MMB-1/MMB-2**	203 g · 440 × 170 × 20 mm	~~€89~~ **€50** NEW PRICE



Ident Nr	Product Description	Weight & Dimensions (W × H × D)	Price
K2.66124.0	**Mini Matte Box MMB-2 Basic Module**	437 g · 270 × 195 × 105 mm	~~€660~~ **€330** NEW PRICE
	114 mm back. For one 4x4in/4.5in round filter frame and one 4x5.65in/4x4in frame (filter frame is not incl.). Rear stage fully rotatable.		
K2.66127.0	**Console 15mm MMB-2**	67 g · 150 × 80 × 30 mm	~~€150~~ **€100** NEW PRICE
			
K2.66134.0	**Side Flag Holder**	53 g · 130 × 100 × 20 mm	~~€160~~ **€90** NEW PRICE
			
K2.66148.0	**Side Flag right**	85 g · 150 × 120 × 5 mm	~~€200~~ **€170** NEW PRICE
			
K2.66150.0	**Side Flag left**	85 g · 150 × 120 × 5 mm	~~€200~~ **€170** NEW PRICE
			

Studio Matte Box SMB

K2.0001466	**SMB-1 Sunshade Anam.**		~~€110~~ **€60** NEW PRICE
			

Ident Nr	Product Description	Weight & Dimensions (W × H × D)	Price
K2.0001517	**SMB Top/Bottom Flag Holders 2pcs.**		~~€110~~ **€60** NEW PRICE



K2.0002575	**SMB-2 Side Flags Anam., Pair**		~~€720~~ **€460** NEW PRICE



K2.66273.0	**SMB-1 Top/Bottom Flag**	824 g · 740 × 260 × 50 mm	~~€470~~ **€410** NEW PRICE
	Useable as top or bottom flag with advanced adjusters and foldable side flaps.		



Production Matte Boxes MB-19

K2.47106.0	**Side Flags pair**		~~€300~~ **€220** NEW PRICE
	side flags for MB-19		
K2.66039.0	**Adapter for 19mm Support Rods**		~~€90~~ **€65** NEW PRICE



Lightweight Matte Box LMB 4x5

K2.0015140	**LMB 4x5 Backplate with filter guides**	192 g · 235 × 145 × 24 mm	**€460**



Ident Nr	Product Description	Weight & Dimensions (W × H × D)	Price

Lightweight Matte Box Accessories

K2.0013440	**LMB 15mm Studio Rod Adapter**	95 g · 134 × 38 × 38 mm	~~€270~~ **€180** NEW PRICE

A tool-less screw in 15 mm studio support adapter
Compatible with following products:
K2.0013427 LMB 4x5 15mm Lightweight Support Console
K2.0013447 LMB 4x5 Swing Away Tilt Module
K2.0019275 LMB 6x6 Clamp Adapter 143mm
K2.0019156 LMB 6x6 Clamp Adapter 165mm
K2.0019085 LMB 6x6 Tilt and Flex Adapter 80-156mm



Lightweight Matte Box LMB 6x6

K2.0019085	**LMB 6x6 Tilt and Flex Adapter 80-156mm**	213 g · 200 × 192 × 64 mm	~~€240~~ **€130** NEW PRICE

The Tilt and Flex Adapter is a flexible rubber donut compatible with lens diameters from above 80mm to less than 156mm. It works perfectly with lenses where lens elements are extending and can compensate the tilting angle when using the Swing Away Tilt Modules from the LMB 6x6. An interface for both LMB 15mm and LMB 19mm Studio Rod Adapters is integrated at the bottom.



K2.0019253	**LMB 6x6 Set of Mattes spherical**	348 g · 293 × 10 × 210 mm	~~€240~~ **€150** NEW PRICE

A set of 5 hard mattes with different spherical openings that can be clicked into the sunshade of the LMB 6x6 to prevent image quality loss caused by stray light.



K2.0019258	**LMB 6x6 Set of Mattes anamorphic**	461 g · 300 × 10 × 210 mm	~~€240~~ **€150** NEW PRICE

A set of 5 hard mattes with different anamorphic openings that can be clicked into the sunshade of the LMB 6x6 to prevent image quality loss caused by stray light.



K2.0019895	**LMB 6x6 Swing Away Tilt Mod. 15mm Studio**	351 g · 220 × 237 × 97 mm	~~€1.020~~ **€700** NEW PRICE

This module offers a comfortable swing-away with extension for easier lens changes, as well as an integrated tilt module for 10° up and down adjustments to avoid unwanted reflections.
For use with 15mm studio rod system.



Ident Nr	Product Description	Weight & Dimensions (W × H × D)	Price

Lightweight Matte Box LMB 6x6 Clamp Adapters

K2.0019129	**LMB 6x6 Clamp Adapter 134mm**	160 g · 200 × 195 × 10 mm	~~€220~~ **€140** NEW PRICE
	For LMB 6x6 and LMB-6.		
K2.0019135	**LMB 6x6 Clamp Adapter 125mm**	170 g · 200 × 194 × 10 mm	~~€220~~ **€140** NEW PRICE
	For LMB 6x6 and LMB-6.		
K2.0019150	**LMB 6x6 Clamp Adapter 110mm**	183 g · 200 × 193 × 10 mm	~~€220~~ **€130** NEW PRICE
	For LMB 6x6 and LMB-6.		
K2.0019152	**LMB 6x6 Clamp Adapter 104mm**	188 g · 200 × 195 × 10 mm	~~€220~~ **€150** NEW PRICE
	For LMB 6x6 and LMB-6.		
K2.0019157	**LMB 6x6 Clamp Adapter 95mm**	196 g · 200 × 195 × 10 mm	~~€220~~ **€120** NEW PRICE
	For LMB 6x6 and LMB-6.		

Diopter Accessories

K2.0014357	**Diopter Adapter 138mm to 4.5in**	28 g · 140 × 140 × 10 mm	~~€140~~ **€95** NEW PRICE
	The diopter adapter is compatible with both diopter stage and diopter frame 138mm and allows the use of 4,5 inch close-up diopters.		

Ident Nr	Product Description	Weight & Dimensions (W × H × D)	Price
K2.0021332	**Diopter Stage 6in**	425 g · 200 × 200 × 40 mm	~~€835~~ **€520** NEW PRICE
	The diopter stage can be used at the back of a 6.6x6.6 clip-on a matte box, or independently with a rear-mounted clamp adapter. Diopters up to +3 can be fitted, and the position of split diopters can be adjusted with an integrated friction wheel. As with the diopter frame, a safety device and 1/4 mounting threads are included. Compatible with LMB 6x6 and LMB-6.		

F1 Filter Frames

K2.0005874	**F1 Filter Frame 4x5.65in for 6.6x6.6in, non-geared**	137 g · 260 × 180 × 10 mm	~~€260~~ **€170** NEW PRICE
	Compatible with LMB 6x6, LMB-6 and SMB-1.		
K2.0005906	**F1 Triple Filter Frame 6.6x6.6in, non-geared**	136 g · 260 × 180 × 20 mm	~~€360~~ **€190** NEW PRICE
	Compatible with LMB 6x6, LMB-6 and SMB-1. The triple filter frames accommodate two or three filters in a single filter frame taking two regular matte box slots and prevent unwanted reflections between glass filter surfaces. Although compatible with some legacy ARRI matte boxes, the triple filter frame achieves maximum benefits when used in combination with the tilting matte box SMB-1. Fits in a 2-stage slot of a filter stage.		

F2 Filter Frames

K2.0006085	**F2 Triple Filter Frame 4x5.65in, non-geared**	121 g · 210 × 150 × 20 mm	~~€300~~ **€190** NEW PRICE
	The triple filter frames accommodate two or three filters in a single filter frame taking two regular matte box slots and prevent unwanted reflections between glass filter surfaces. Although compatible with some legacy ARRI matte boxes, the triple filter frame achieves maximum benefits when used in combination with the tilting matte box SMB-2. Fits in a 2-stage slot of a filter stage.		
K2.49083.0	**Filter Frame 4x5,65in H, non-geared**	97 g · 380 × 260 × 15 mm	~~€240~~ **€150** NEW PRICE
	Compatible with SMB-2. Filter orients horizontally when inserted from above.		

Ident Nr	Product Description	Weight & Dimensions (W × H × D)	Price
K2.49096.0	**Filter Frame 4x5,65in H, geared** Compatible with SMB-2. Filter orients horizontally when inserted from above.	100 g · 380 × 260 × 15 mm	~~€270~~ **€180** NEW PRICE



F4 Filter Frames

K2.65230.0	**Filter Frame Combo 4x5.65/4x4in** Compatible with LMB 4x5, LMB-25 and MMB-2.	245 g · 380 × 260 × 15 mm	~~€270~~ **€180** NEW PRICE



K2.66036.0	**Filter Frame 5,65x5,65in** Compatible with LMB 4x5, LMB-25 and MMB-2. For use with 4x5,65 filter vertically or 5,65x5,65 filter.	220 g · 260 × 380 × 15 mm	~~€140~~ **€90** NEW PRICE



K2.66046.0	**Filter Frame 4x5.65in, open corners** For use with MMB-1 side load. Open corners allow for rotation under microphone of Sony PMW-EX1.	216 g · 380 × 260 × 15 mm	~~€62~~ **€40** NEW PRICE



F5 Filter Frames

K2.65022.0	**Filter Frame Combo 5.65x5.65in/5x6in** Compatible with MB-20 and MB-28. Accepts 5.65x5.65 filter or 5x6 filter horizontally (5x5.6 filter orients horizontally when inserted from above).	227 g · 260 × 380 × 15 mm	~~€240~~ **€150** NEW PRICE



K2.65048.0	**Filter Frame 4x5.65in, H** Compatible with MB-20 and MB-28. Traditional film-style 4x5.65 filter frame with light shielding all around filter (filter orients horizontally when inserted from above).	250 g · 260 × 380 × 15 mm	~~€250~~ **€150** NEW PRICE



Ident Nr	Product Description	Weight & Dimensions (W × H × D)	Price
K2.65095.0	**Filter Frame Combo 4x5.65in H/4x4in**	257 g · 380 × 260 × 15 mm	~~€210~~ **€130** NEW PRICE
	Compatible with MB-20 and MB-28. With cutouts to center 4x4 filter (4x5.65 filter orients horizontally when inserted from above).		

R1 Tilting Filter Rings – for 6 inch Filter (165 mm ring diameter)

K2.0001174	**6in Tilting Filter Ring 150mm**	635 g · 200 × 200 × 120 mm	~~€340~~ **€255** NEW PRICE
	2-part bellow ring (R1) designed to follow the tilt movement of the SMB-1. Compatible with all R8 screw-on rings (and R4 screw-on rings via K2.66095.0).		

R1 Filter Rings – for 138 mm Filter (165 mm ring diameter)

K2.34784.0	**138mm Filter Ring, 161mm**	203 g · 165 × 165 × 40 mm	~~€315~~ **€145** NEW PRICE
			
K2.47342.0	**138mm Filter Ring, 95mm**	218 g · 250 × 180 × 40 mm	~~€360~~ **€145** NEW PRICE
	For Ultra Primes 16-135 mm with rubber sleeve and connection ring. Not for use with wide-angle video zooms.		
K2.52194.0	**138mm Filter Ring, 114mm**	189 g · 165 × 165 × 30 mm	~~€380~~ **€145** NEW PRICE
	With rubber sleeve for Master Prime Lenses, UP14 mm, UP180 mm, LDS-UP 14 mm and LDS-UP 180 mm. Takes reduction rings size R4.		

Ident Nr	Product Description	Weight & Dimensions (W × H × D)	Price

R1 Filter Rings – for 6 inch Filter (165 mm ring diameter)

K2.52197.0	**6in Filter Ring, 114mm**	175 g · 250 × 200 × 30 mm	~~€380~~ **€285** NEW PRICE
	With rubber sleeve for Master Prime Lenses, UP14 mm, UP180 mm, LDS-UP 14 mm and LDS-UP 180 mm. Takes reduction rings size R4.		

R2 Large Diameter Wide-Angle (no round filter)

K2.65245.0	**Reflex Prevention Ring 134mm**	55 g · 150 × 150 × 20 mm	~~€62~~ **€25** NEW PRICE
			
K2.66268.0	**Reflex Prevention Ring, 136mm**	50 g · 145 × 145 × 125 mm	~~€62~~ **€25** NEW PRICE
			

R3 Filter Rings – for 4 1/2 inch Filter (128 mm ring diameter)

K2.49109.0	**R3 4 1/2in Filter Ring 87mm**	99 g · 150 × 140 × 40 mm	~~€300~~ **€190** NEW PRICE
	For Zeiss Vario Sonnar. Takes reduction rings size R6.		

R4 Screw-In Reduction Rings (114 mm to .....mm)

K2.65045.0	**Screw-In Reduction Ring 114mm-110mm**	18 g · 125 × 125 × 10 mm	~~€50~~ **€30** NEW PRICE
	For Cooke S4 and LDS Cooke S4.		

Ident Nr	Product Description	Weight & Dimensions (W × H × D)	Price
K2.65046.0	**Screw-In Reduction Ring 114mm-100mm**	42 g · 125 × 125 × 20 mm	~~€50~~ **€30** NEW PRICE
	For Fujinon XS8x4mm (Sony EX-3). With internal thread for use with R5 reduction rings.		
K2.65165.0	**Screw-In Reduction Ring 114mm-80mm**	39 g · 125 × 125 × 10 mm	~~€56~~ **€35** NEW PRICE
	For Sony HVR-V1E.		
K2.65201.0	**Screw-In Reduction Ring 114mm-93mm**	53 g · 125 × 125 × 10 mm	~~€60~~ **€35** NEW PRICE
	For Sony HVR-Z5.		
K2.65273.0	**Screw-In Reduction Ring 114mm-95mm WA**	45 g · 125 × 125 × 9 mm	~~€50~~ **€30** NEW PRICE
			

R8 Screw-In Reduction Rings (150 mm to .....mm)

K2.66060.0	**Screw-In Reduction Ring 150-142mm**	37 g · 155 × 155 × 10 mm	~~€55~~ **€30** NEW PRICE
	For Red 18-85 Zoom.		

Adapter Rings

K2.66086.0	**Adapter Ring R2-R3**	10 g · 140 × 140 × 10 mm	~~€140~~ **€90** NEW PRICE
	With screws - fits into size R2 mount and allows use of size R3 rings.		

Ident Nr	Product Description	Weight & Dimensions (W × H × D)	Price
MMB-2 Rings			
K2.66126.0	**Still Lens Clamp-On Ring 67**	152 g · 115 × 115 × 10 mm	~~€72~~ **€45** NEW PRICE
			
K2.66136.0	**Still Lens Clamp-On Ring 77**	33 g · 115 × 115 × 10 mm	~~€72~~ **€45** NEW PRICE
			
K2.66140.0	**Still Lens Clamp-On Ring 52**	38 g · 115 × 115 × 10 mm	~~€72~~ **€45** NEW PRICE
	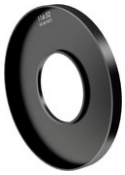		
K2.66143.0	**Still Lens Clamp-On Ring 58**	35 g · 115 × 115 × 10 mm	~~€85~~ **€45** NEW PRICE
			
K2.66147.0	**Reduction/Clamp-On Ring 95mm, UP**	78 g · 25 × 145 × 160 mm	~~€120~~ **€75** NEW PRICE
			
K2.66149.0	**Reduction/Clamp-On Ring 110mm, Cooke S4**	32 g · 115 × 115 × 20 mm	~~€120~~ **€70** NEW PRICE
			

Ident Nr	Product Description	Weight & Dimensions (W × H × D)	Price
K2.66156.0	**Connection Ring flexible 52**	28 g · 105 × 105 × 10 mm	~~€72~~ **€50** NEW PRICE
	Compatible with MMB-2. Please use the Flexible Light Protection for moving zoom lenses (K2.66161.0) to connect the ring to the Matte Box.		
K2.66160.0	**Reduction/Clamp-On Ring 80mm**	54 g · 130 × 150 × 20 mm	~~€120~~ **€80** NEW PRICE
			
K2.66161.0	**Flexible Light Protection**	13 g · 155 × 60 × 10 mm	~~€39~~ **€20** NEW PRICE
	Flexible ring for moving lenses. Please use MMB-2 connections rings to connect the matte box to the lens.		

Bags

K2.0017196	**Unit Bag Small II**	3500 g · 470 × 265 × 265 mm	~~€230~~ **€120** NEW PRICE
	ARRI´s Unit Bag Small II can be used as hand luggage on airplanes. You can put any extra bits and pieces in the three different size exterior pockets, or in the included three removable accessory pouches. It comes with an elastic drawstring and cord lock on the top of the lid. Includes: 1x shoulder strap, 3x accessory pocket, 1x long divider, 2x short divider, 4x hook-and-loop, 1x cord, 2x luggage tag, rain cover. Volume: 30 L		
K2.0019420	**Unit Bag Rain Cover**	15 g · 670 × 300 × 365 mm	~~€20~~ **€10** NEW PRICE
	Rain Cover for Unit Bag S, M and L. It can also be used to protect other pieces of equipment. Includes: 1x rain cover, 1x luggage tag		
K2.0019421	**Unit Bag Small II Pocket Set**	130 g · 120 × 360 × 60 mm	~~€57~~ **€25** NEW PRICE
	Includes: 1x long pocket 2x short pocket 1x luggage tag		

Ident Nr	Product Description	Weight & Dimensions (W × H × D)	Price

Belts

K2.0013019	**Small Crew Belt**	135 g · 50 × 10 × 700 mm	~~€40~~ **€20** NEW PRICE
	Adjustable from 70 cm till 95 cm.		
K2.0013037	**Large Crew Belt**	155 g · 40 × 10 × 850 mm	~~€45~~ **€25** NEW PRICE
	Adjustable from 90-120cm.		

Miscellaneous

K2.0013036	**6.6x6.6in Filter Pouch**	221 g · 2030 × 2030 × 670 mm	~~€60~~ **€40** NEW PRICE
	A multi-filter belt pouch that offers a lightweight, yet rugged solution for keeping filters organised and close at hand while on a shoot. The exterior is constructed from an abrasion and water-resistant nylon fabric, while the soft, padded internal lining and dividers provide ample protection for up to six filters. A belt loop on the back allows the pouch to be attached to the ARRI Padded Crew Belt.		
K2.0013249	**Ultimate Pro Set Leather Gloves S**	50 g · 220 × 100 mm (W × D)	~~€45~~ **€30** NEW PRICE
	Extremely hard-wearing, ARRI Ultimate Pro-Set gloves feature dual-layered goat leather in high wear areas to meet the demands of life on set. A padded palm ensures comfort without affecting performance, while neoprene panels on the knuckles allow for maximum dexterity. With the adjustable wrist closure, you can ensure the gloves fit comfortably and for those who want to stay digital device enabled the forefinger and thumb have touchscreen compatible tips.		
K2.0014582	**4x5,65in Filter Pouch 8-pocket**		~~€60~~ **€30** NEW PRICE
	The 4 x 5.65" 8-Pocket Filter Pouch from ARRI is a lightweight filter belt pouch designed for keeping filters organized and close at hand while on a shoot. The exterior is constructed from an abrasion and water-resistant nylon fabric while the soft, padded internal lining and dividers provide ample protection for up to eight filters. A belt loop on the back allows the pouch to be attached to the ARRI padded crew belt.		

Arnold & Richter Cine Technik GmbH & Co.

General Sale and Delivery Terms and Conditions for Merchants(1)

1. General; Scope

The terms and conditions delineated herein shall be the sole terms and conditions which apply to all of ARRI ‘s current and future business transactions. Unless ARRI has approved of such in writing, any terms or conditions which conflict with, deviate from or modify the terms and conditions delineated herein shall not be binding on ARRI irrespective of whether ARRI had prior notice of such terms or conditions. ARRI hereby expressly objects to any such conflicting, deviating or modified terms or conditions.

2. Contract Formation

2.1 Any offers made by ARRI shall be without obligation and subject to change without notice provided that the parties have not agreed to a lock-up period.

2.2 The customer is bound to its order for a period of four weeks after its receipt by ARRI. A contract is deemed to exist upon the customer ‘s receipt of ARRI ‘s written confirmation regarding the order or the effective delivery of the applicable goods to the customer pursuant to the terms hereof.

2.3 The scope and type of delivery for an order shall be established solely through ARRI ‘s written confirmation relating to such order. Any errors or omissions in ARRI ‘s sales prospectus, pricelists, offer documents or other related documentation may be amended without ARRI incurring any liability for damages or compensation in relation to such errors or omissions.

3. Payment, Set-Off, Withholding

3.1 The purchase price for the contract shall be that price which is specified by ARRI for such contract and shall apply ex works, exclusive of any value-added tax; if the price is not indicated, the pricelist then in effect shall apply. If the sale has occurred through delivery to a place other than the place of performance (at the customer ‘s request), any costs incurred for packaging, shipping, freight, customs or other related costs will be charged separately. If the customer fails to accept delivery when tendered by ARRI, it must nevertheless make payment.

3.2 In the event that the manufacturing costs for the contracted goods (including, but not limited to, wages, salaries, materials or production costs) rise subsequent to formation of the contract, ARRI shall have the right to increase the purchase price in accordance therewith.

3.3 Invoices from ARRI are due upon ARRI making the goods available to the customer and are payable without deductions within 10 days of the issuance thereof. Upon a default in payment, any overdue amounts will accrue interest at a rate of 8% above the basic interest rate. ARRI reserves its right to assert any further claims regarding damages resulting from a default.

3.4 The customer can offset its payments only if its counterclaim thereto have been judicially sustained or recognized by a declaratory judgment. A right to withholding shall only apply to counterclaims arising specifically from the contract which is the subject of such withholding.

4. Delivery

4.1 The dates for delivery and/or the making available of the goods are not binding unless a date for such has been agreed to in writing by ARRI.

4.2 ARRI is entitled to carry out advance and/or partial deliveries of the goods.

4.3 In the event that ARRI is unable to deliver or make the goods available to the customer due to events of force majeure lasting for a period of three months or more, ARRI ‘s obligation to deliver or make the goods available shall be deemed extinguished in its entirety.

4.4 ARRI shall be entitled to postpone delivery or availability of the goods for the entire duration of the force majeure events.

4.5 Events of force majeure shall be deemed to be any events which are beyond ARRI ‘s control and which make delivery impossible or unreason-ably difficult, including, for example, strikes, lawful lockouts, war, import or export prohibitions, scarcity of energy supplies or raw materials, or the delayed delivery to ARRI of goods required for the performance of its obligations hereunder for reasons beyond ARRI ‘s control. If ARRI is released from its obligations as described in Section 4.3 above, the customer shall be entitled to rescind the applicable contract. Compensation

for damages for non-performance can be claimed by the customer only if the default in delivery is due to ARRI ‘s gross negligence or is intentionally caused by ARRI.

5. Transfer of Risk

5.1 The risk of loss or damage to the goods passes to the buyer as soon as ARRI has dispatched the goods from its premises (i.e., plant, factory or warehouse) or upon the surrendering of the goods to the applicable carrier or to the customer itself, as the case may be. The above shall also apply in the event that ARRI serves as the carrier for the goods.5.2 If the forwarding or collection of the goods is delayed due to reasons attributable to the customer, the risk of loss shall be transferred to the customer upon the readiness of the goods for dispatch.

6. Defective Goods

6.1 The customer must inspect the delivered goods immediately upon its receipt of such. The customer must notify ARRI in writing of any apparent defects within one week of the goods ‘ receipt. ARRI must be notified of hidden defects in writing within two weeks of their emergence but in no event later than one year after delivery of such goods. In the event that the customer fails to meet the aforementioned notification obligations, the goods shall be deemed to have been accepted and the rights set forth in Sections 6.2 and 6.3 below shall not be in effect.

6.2 In the event that the customer has notified ARRI of defects in a timely manner and is thus eligible to make a claim for re-performance, ARRI shall have the right, at its own cost, either to remedy the defect or to redeliver conforming goods.

6.3 If ARRI twice fails to remedy a defect or if ARRI is otherwise unable to accomplish ist re-performance obligation or fails to do so within a time period reasonably set forth by the customer, the customer shall be entitled to reduce the purchase price under the contract or to cancel the contract. Instead of seeking performance, the customer can make a claim for damages or for compensation for expenses. However, if the customer elects to rescind the contract it shall have no right to make any claim for damages with respect to the defective goods.

6.4 Provided that ARRI has not acted fraudulently, any claims of the customer regarding the goods shall become void and unenforceable one year after delivery of the applicable goods.

6.5 The prescription period of one year in Section 6.4 above shall be replaced by a prescription period of two years for goods from the product range „Light “ of ARRI that are distributed under the brand „ARRI “.

7. Liability

7.1 ARRI shall be liable for any damage hereunder caused by it intentionally or caused by ist gross negligence.

7.2 In the event of simple negligence by ARRI, ARRI shall be liable only for ordinary and foreseeable damage arising from the contract, and only to the extent that ARRI has breached material contractual obligations. Further, in the event of simple negligence by ARRI, ARRI shall be liable for personal injury and/or healthrelated damage attributable to ARRI.

7.3 ARRI shall not be liable for consequential damages and unforeseen damages (including consequential damages resulting from defective goods) as well as loss of profits in the event it has acted with simple negligence.

7.4 ARRI shall be subject to no liability beyond that which is delineated in this Section 7.

7.5 To the extent that ARRI ‘s liability is excluded or limited, such exclusion or limitation shall apply to any persons or entities employed by ARRI in the performance of ist contractual obligations.

7.6 The limitations of liability delineated herein shall not apply to any legally prescribed strict liability, in particular any such strict liability arising from laws regarding guarantees or product warranties.

8. Retention of Title

8.1 Ownership of the delivered goods shall remain with ARRI until it has received full payment for such goods. Title to the goods shall first pass to the customer upon ARRI ‘s receipt of all payments which are due under the current applicable contract.

8.2 Prior to obtaining title to the goods, the customer is not entitled to pledge, to assign by way of security, to process or to alter the goods. The customer is, however, authorized to sell the goods to third parties in the ordinary

course of business unless a non-assignability agreement regarding the consideration exists between the customer and the third party. If a third party acquires an interest in the goods through a resale to such party, the customer agrees to assign to ARRI all of ist correlating rights and claims against such third party. ARRI hereby accepts such assignment.

8.3 Any combination, amalgamation and/or processing of the goods (sections 947, 948 and 950 BGB [German Civil Code]) shall be deemed to have been made on behalf of ARRI. ARRI shall acquire title to the resulting product in the ratio of the invoiced value of the goods and services provided by ARRI to the total invoiced value of the resulting product. If the goods have been re-sold to a third party, the assignment of rights and claims performed in accordance with Section 8.2 above shall be valid solely up to the amount of the invoiced value of goods and services provided by ARRI.

8.4 Upon a default in payment by the customer, ARRI has the right to disclose to any applicable third party that it holds an interest in the goods pursuant to the assignment delineated above and to assert any of ist claims directly. The customer is obligated to provide and deliver to ARRI all documentation required for the assertion of such claims. The customer must also make available to ARRI, completely and in a timely fashion, all information about any events that might affect the obligations described above.

9. Jurisdiction; Governing Law

9.1 The parties hereto agree that the exclusive jurisdiction for any transaction and/or contract between the parties is Munich, Germany.

9.2 The relationship of the parties hereto shall be exclusively governed by and in all respects construed in accordance with the laws of the Federal Republic of Germany with no application whatsoever of the United Nations sales law.

Last modified: 1st January 2006

(1)Kaufleute as defined in the HGB [German Commercial Code]



www.arri.com

For Enquiry:

Arnold & Richter Cine Technik GmbH & Co. Betriebs KG
Herbert-Bayer-Str. 10
80807 Munich
Germany
Tel: +49 (0)89 3809 0