Timing Shift Box

for ARRIFLEX 435 Advanced/Xtreme

Instruction Manual

As of: 11 / 2005

All artwork, pictures and text are covered by our copyright.
They must not been copied (e.g. CD-ROM, disks or internet sites) or used in their entire form or in excerpts without our previous written agreement.

If you are downloading PDF-files from our internet hompage for your personal use, make sure to check for updated versions.
We cannot take any liability whatsoever for downloaded files, as technical data are subject to change without notice.

1. Contents

1. Contents 3

2. Safety Instructions and Legal Disclaimer 5
2.1. Safety Instructions 5
2.2. Legal Disclaimer 7

3. Description 9
3.1 ARRI Order Numbers 10
3.2 System Requirements 10

4. Operating 11

5. Effects Guide 12

6. ARRI Service 15

2. Safety Instructions and Legal Disclaimer

2.1. Safety Instructions



Please follow these instructions to help ensure against injury to yourself and damage to the system or other objects. This safety information is additional to the product-specific operating instructions in general and must be strictly observed for safety reasons. They are no substitute to settled down your own safety measures.

Warning signs



Possible risk of injury or damage to equipment.



This symbol indicates the risk of electrical shock or fire danger that could result in injury or equipment damage.

General Safety Instructions



Read and understand all safety and operating instructions before you operate or install the system.



Retain all safety and operating instructions for future reference.



Heed all warnings on the system and in the safety and operating instructions before you operate or install the system. Follow all installation and operating instructions.



Do not use accessories or attachments not recommended by ARRI, as they may cause hazards and void the warranty.



Do not repair any part of the system. Repairs must be carried out by authorized ARRI repair shops.



Do not remove any safety measure of the system.



Do not operate the system in high humidity areas or expose it to water or moisture.



Do not place the system on an unstable cart, stand, tripod, bracket or table. The system may fall, causing serious personal injury and damage to the system or other objects.



Operate the system using only the type of power source indicated in the manual. Unplug the power cord by gripping the plug, not the cord.



Never insert objects of any kind into any part of the system through openings, as the objects may touch dangerous voltage points or short out parts. This could cause fire or electrical shock.



Unplug the system from the power outlet before opening any part of the system or before making any changes on the system, especially the attaching or removing of cables.



Do not use force!



Do not use solvents in cleaning!



Do not remove any screws which are secured with paint!

Any violation of these safety instructions or the non-observance of personal care could cause serious injuries (including death) and damages on the system or other objects.

Product specifications

In the case of inquiries or when ordering parts, please advise serial number and model.

Explanation of the Symbols in the manual

Note: *Indicates important remarks and cross references.*



Caution!

Indicates subjects of particular importance

2.2 Disclaimer

Before using the products described in this manual be sure to read and understand all respective instructions. The ARRI Timing Shift Box (TSB) is only available for commercial customers. The customer grants by utilization, that the ARRI TSB or other components of the system are only deployed for commercial use. Otherwise the customer has the obligation to contact ARRI preceding the utilization.
While ARRI endeavors to enhance the quality, reliability and safety of their products, customers agree and acknowledge that the possibility of defects thereof cannot be eliminated entirely. To minimize risks of damage to property or injury (including death) to persons arising from defects in the products, customers must incorporate sufficient safety measures in their work with the system and have to heed the statuted canonic use.
No part of this document may be copied or reproduced in any form or by any means without prior written consent of ARRI. ARRI assumes no responsibility for any errors that may appear in this document. The information is subject to change without notice.
For actual design-in, refer to the latest publications of ARRI data sheets or data books, etc., for the most up-to-date specifcations. Not all products and/or types are available in every country. Please check with an ARRI sales representative for availability and additional information.
ARRI or its subsidiaries does not assume any liability for infringement of patents, copyrights or other intellectual property rights of third parties by or arising from the use of ARRI products or any other liability arising from the use of such products. No license, express, implied or otherwise, is granted under any patents, copyrights or other intellectual property rights of ARRI or others.
ARRI or its subsidiaries expressly excludes any liability, warranty, demand or other obligation for any claim, representation, or cause, or action, or whatsoever, express or implied, whether in contract or tort, including negligence, or incorporated in terms and conditions, whether by statue, law or otherwise. In no event shall ARRI or its subsidiaries be liable for or you have a remedy for recovery of any special, direct, indirect, incidental, or consequential damages, including but not limited to lost profts, lost savings, lost revenues or economic loss of any kind or for any claim by third party, down-

time, good-will, damage to or replacement of equipment or property, any costs or recovering of any material or goods associated with the assembly or use of our products, or any other damages or injury of persons and so on or under any other legal theory.

In the case one or all of the forgoing clauses are not allowed by applicable law, the fullest extent permissible clauses by applicable law are validated.

ARRI is a registered trademark of Arnold & Richter CineTechnik GmbH & Co Betriebs KG.

3. Description

The Timing Shift Box (TSB) adjusts the phase relationship of the mirror shutter to the movement. The result is that the film is exposed while being transported, which creates a streaking effect. This is an effect that has recently become very popular.



The timing shift effect can be adjusted from very faint to very strong. A timing shift can be done while the camera is running (a timing shift ramp), or the effect can be locked to remain constant.
A unique feature of the Timing Shift Box is the Jitter function. It introduces a random fluctuation in the timing shift, resulting in a fluctuation of the length of the streak. Considering that the timing shift effect often indicates an altered state of reality, this fluctuation can greatly enhance the effect. Please note that camera noise may increase when using the Jitter feature.
The Timing Shift Box hardware is based on the ARRICAM Manual Control Box hardware. To ensure that the Timing Shift Box is not confused with the ARRICAM Manual Control Box (black front cover) or the Timing Shift Box for ARRICAM (red front cover), the Timing Shift Box front cover for ARRIFLEX 435 Advanced/Xtreme use is blue. It will work with 4 perforation and with 3 perforation movements. The Timing Shift Box will be connected to the 11-pin FISCHER socket on the ARRIFLEX 435 Advanced/Xtreme via cable KC 120-S and the MCB Cable Adapter.

3.1 ARRI order numbers

K0.60033.0	435 Timing Shift Box Set for ARRIFLEX 435 Advanced/Xtreme

consisting of:

K2.47399.0	Timing Shift Box (TSB) for ARRIFLEX 435 Advanced/Xtreme (BLUE front cover)
K2.52213.0	MCB Cable Adapter
K2.65076.0	TSB-435 A/X Cable (3m/9ft) KC 120-S Connects MCB Cable Adapter to 11-pin Fischer socket of the ARRIFLEX 435 Advanced/Xtreme

3.2 System requirements

Please note the following necessities and restrictions using the TSB:

- Install Software Packet 02J (CMC_S0284.S) or higher on your ARRIFLEX 435 Advanced or ARRIFLEX 435 Xtreme
- The Timing Shift Box IS NOT useable with previously built ARRIFLEX 435 (ES) cameras.
- Handcrank HC-1 or ARRIMOTION may not be connected to the ARRIFLEX 435 Advanced/ Xtreme at the same time.
- Be sure that Time Code is disabled on the camera.
- Do not plug-in/pull off the TSB to/from your camera during camera RUN
- Switching the TSB ON/OFF during camera RUN will take no effect.

4. Operating

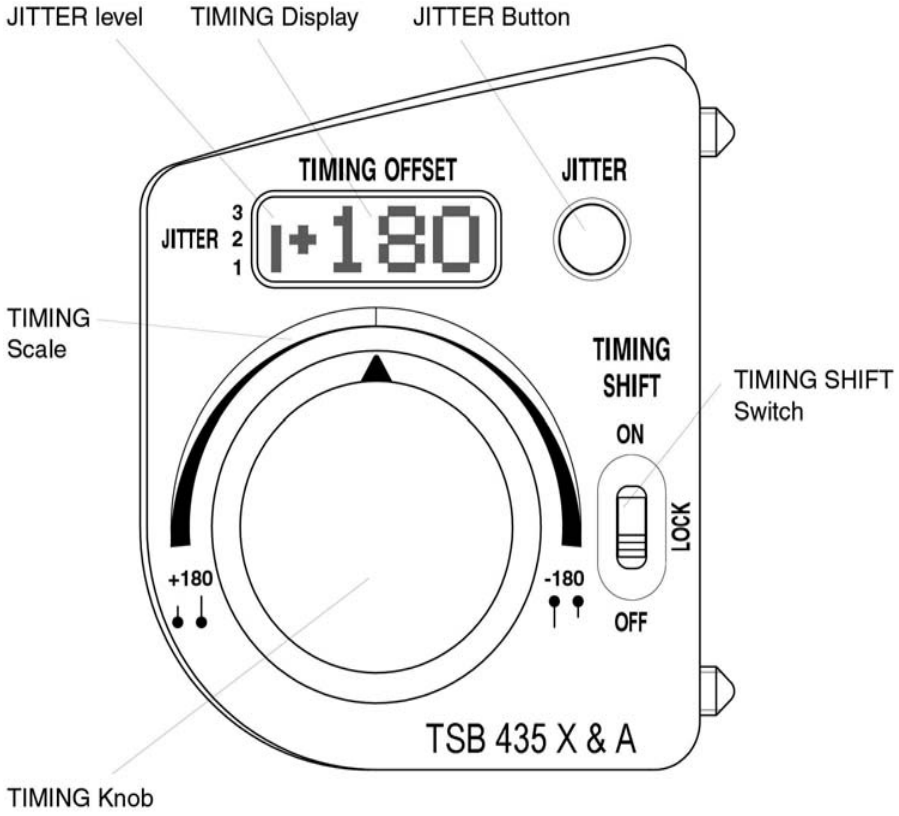

TIMING SHIFT Switch

OFF: Camera behaves as if the TSB was not connected.
ON: The TIMING knob changes the timing.
LOCK: After 3 seconds the current stable timing shift value will be memorized. The TIMING knob has no effect now. Setting the TIMING SHIFT switch back to ON, the actual knob value will be used again, and the memorized value will be cleared.

TIMING Scale

The white part is where the effect covers only part of the image, the black part is where the effect covers the whole image. The drop shaped labels indicate which way the streak will go (up or down), and in which edge the effect will start.

JITTER Button

Push to change the jitter level. A bar graph located left of the plus sign on the TIMING display will show the jitter level. Each time the JITTER button is pushed, the TSB will cycle through the values:
Jitter off, Jitter 1, Jitter 2, Jitter 3.
Additionally the TSB display starts blinking. The blinking rate increases with the effect intensity.

A blinking camera display – in mode 1 only – indicates the active Timing Shift Box directly on the camera to avoid unwanted effects caused by accidental box activation.
The displays on additionally connected Remote Units like or EXD-1 or RCU-1, WRC-1 in camera mode will also indicate an activated TSB with mode 1 blinking.



Jitter off



Jitter 1 (subtle effect)



Jitter 2 (medium effect)



Jitter 3 (maximum effect)

5. Effects Guide

Note: ***Please keep in mind that an accidentally activated TSB may cause disastrous effects on your shot. We recommend to always remove the TSB from the system if it is not essential for the planned scene.***

Schematic view of effect of the timing knob position

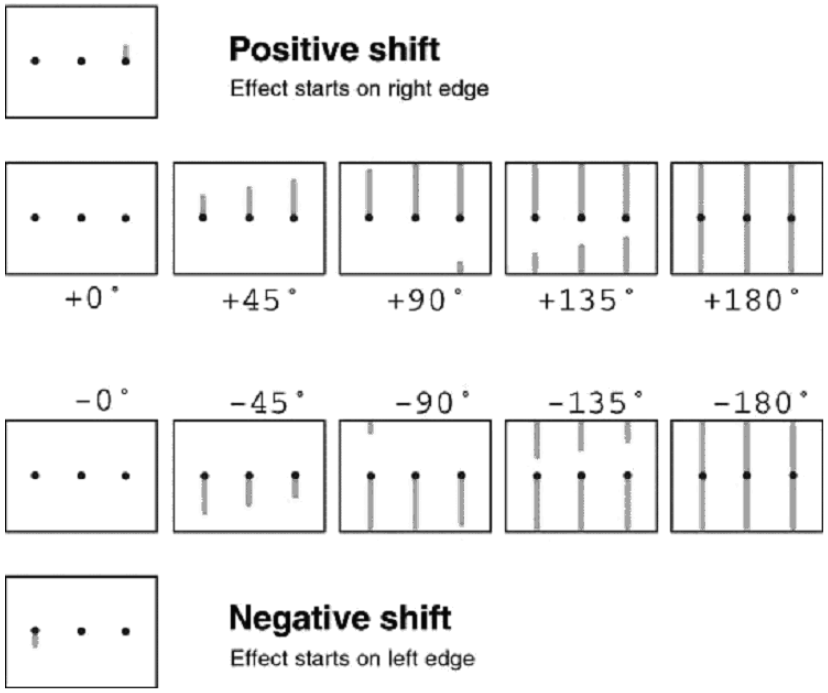

Example pictures

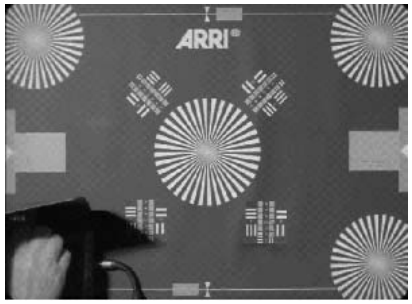

No timing shift

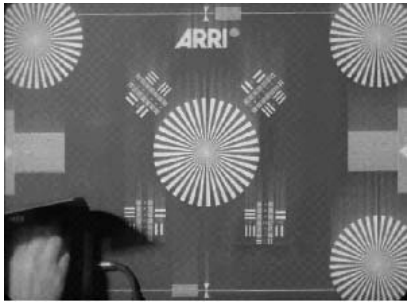

Slight positive timing shift

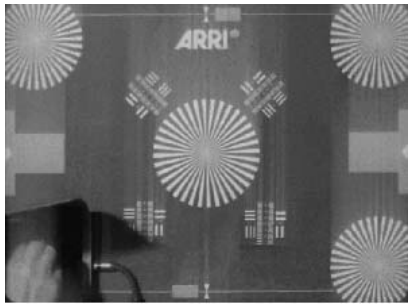

Medium positive timing shift

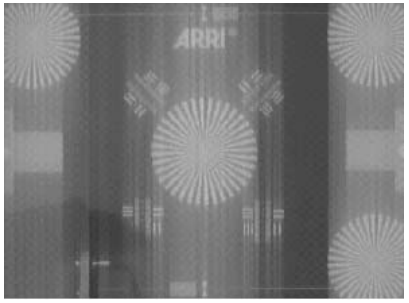

Full positive timing shift

6. ARRI Service

Deutschland

Arnold & Richter Cine Technik
Türkenstraße 89
D-80799 München
Tel.: (089) 3809-0
Fax: (089) 3809-1244
Fax Service: (089) 3809-1793
E-mail Service: webmaster@arri.de

USA

ARRI Inc.
(East Coast)
617, Route 303
Blauvelt, New York 10913
Tel.: (914) 353 14 00
Fax: (914) 425 12 50
E-mail: arriflex@arri.com

ARRI-Inc.
(West Coast)
600 North Victory Blvd.
Burbank, California 91502
Tel.: (818) 841 70 70
Fax: (818) 848 40 28
E-mail: arriflex@arri.com

GB

ARRI (GB) Ltd.
2 Highbridge Oxford Road
Uxbridge
Middlesex, UB8 1LX
Tel.: (0) 1895 457 000
Fax: (0) 1895 457 001
E-mail: sales@arri-gb.com

Italia

ARRI Italia Srl.
Viale Edison 318
I-20099 Sesto San Giovanni (Milano)
Tel.: +39 (02) 262 27 175
Fax: +39 (02) 242 16 92
E-mail: info@arri.it

ARRI Italia Srl.
Via Placanica 97
I-00040 Morena (Roma)
Tel.: +39 (06) 79 89 021
Fax: +39 (06) 79 89 02 206

Canada

ARRI Canada Ltd.
415 Horner Avenue, Unit 11
Etobicoke (Toronto), Ontario
M8W 4W3
CANADA
Tel.: 1 (416) 255-3335 ARRI
Fax: 1 (416) 255-3399
E-mail: email@arrican.com

technical data are subject to change without notice

© ARRI 2005

ARRI Order no. K5.61671.0



ARNOLD & RICHTER CINE TECHNIK Türkenstr. 89 D-80799 München
Phone +49 (0)89 - 3809-0 Fax +49 (0)89 - 3809-1244
www.arri.com