ARRIFLEX 435

Modification of the ARRIFLEX 435 for Software Version 2.4

As of: July 2000

ALL ARTWORK, PICTURES AND TEXTS ARE COVERED BY OUR COPY-RIGHT.
THEY MUST NOT BE COPIED FOR REPRODUCTION (E.G. ON CD-ROM DISKS OR INTERNET-SITES) OR USED IN THEIR ENTIRE FORM OR IN EXCERPTS WITHOUT OUR PREVIOUS WRITTEN AGREEMENT.

IF YOU ARE DOWNLOADING PDF-FILES FROM OUR INTERNET HOME-PAGE FOR YOUR PERSONAL USE, MAKE SURE TO CHECK FOR UPDATED VERSIONS.
WE CANNOT TAKE ANY LIABILITY WHATSOEVER FOR DOWNLOADED FILES, AS TECHNICAL DATA ARE SUBJECT TO CHANGE WITHOUT NOTICE.

1. Safety

Important

Prior to beginning with any work on the camera, we ask you to first read through these instructions very carefully and then to decide whether or not you wish to perform the modification yourself. Should you have the slightest doubt or not feel competent to do the modification yourself, please have the camera retrofitted by an authorized ARRI Service Repair Shop.

Tools needed

- Allen Key 2mm, 2,5 mm, 3 mm
- Box spanner 4mm, 4,5 mm
- Tweezer

Warnings

In your own interest please follow the warnings:



Caution! – stands for danger of injury.
Attention!– equipment damage possible.

Note: Operational error possible!

General Safety Specifications

- Assembly and initial operation must only be carried out by persons that are familiar with the equipment.
- Disconnect the unit from the mains before starting maintenance or service!
- Repairs only by authorized specialist shops!
- Use only original replacement parts and accessories!

Product Identification

When ordering or in case of enquiries please always advise type designation and unit serial-number.

Explanation of the Symbols

➪ **photo** refers to objects shown in pictures, photos or graphs.

2. Modification of the ARRIFLEX 435 for single frame operation

- Switch the camera's main switch to the "off" position and disconnect the camera from the power supply.

*Manually turn the mirror shutter in such a way that the mirror edge is positioned vertically as shown ➪ **photo** so that no damage is done to the mirror when opening the camera.*
Only turn the black hub of the shutter.

Take care not to touch the mirror surface!

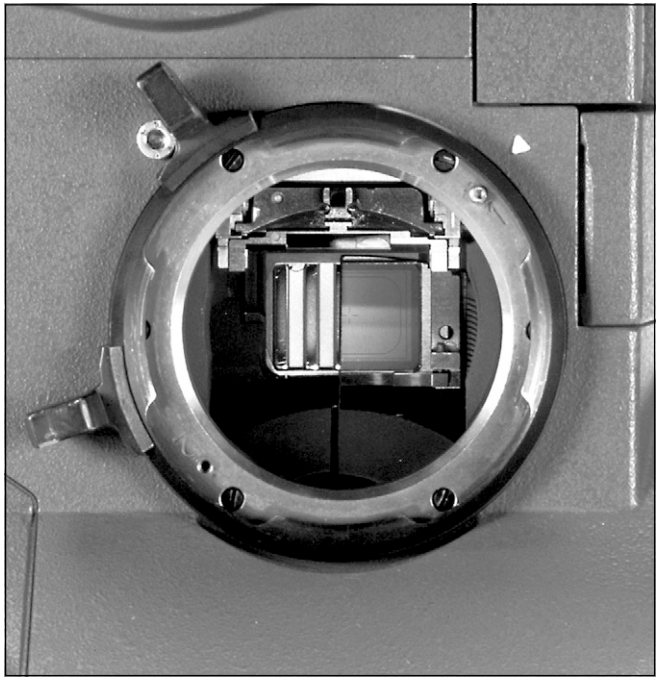

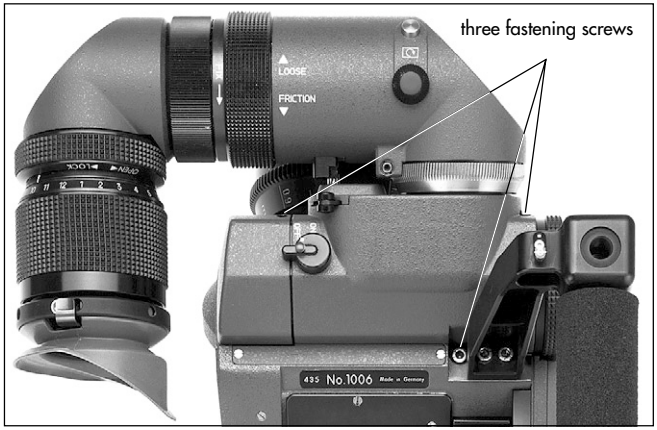

- Take the viewfinder off by removing the three screws ➪ **photo**.



- Remove the electronic cover and/or functional expansion module (FEM) and the IVS ➪ **photo**.

- Completely unscrew and remove
  the 3 short screws (M3-8 DIN912),
  the 3 long screws (M3x30 DIN912)
  and the small screw (M2,5x6 DIN912)
  of the electronic cover ➪ **photo**.
  For the time being, the 2 screws for the connector cap ➪ **photo** remain where they are.

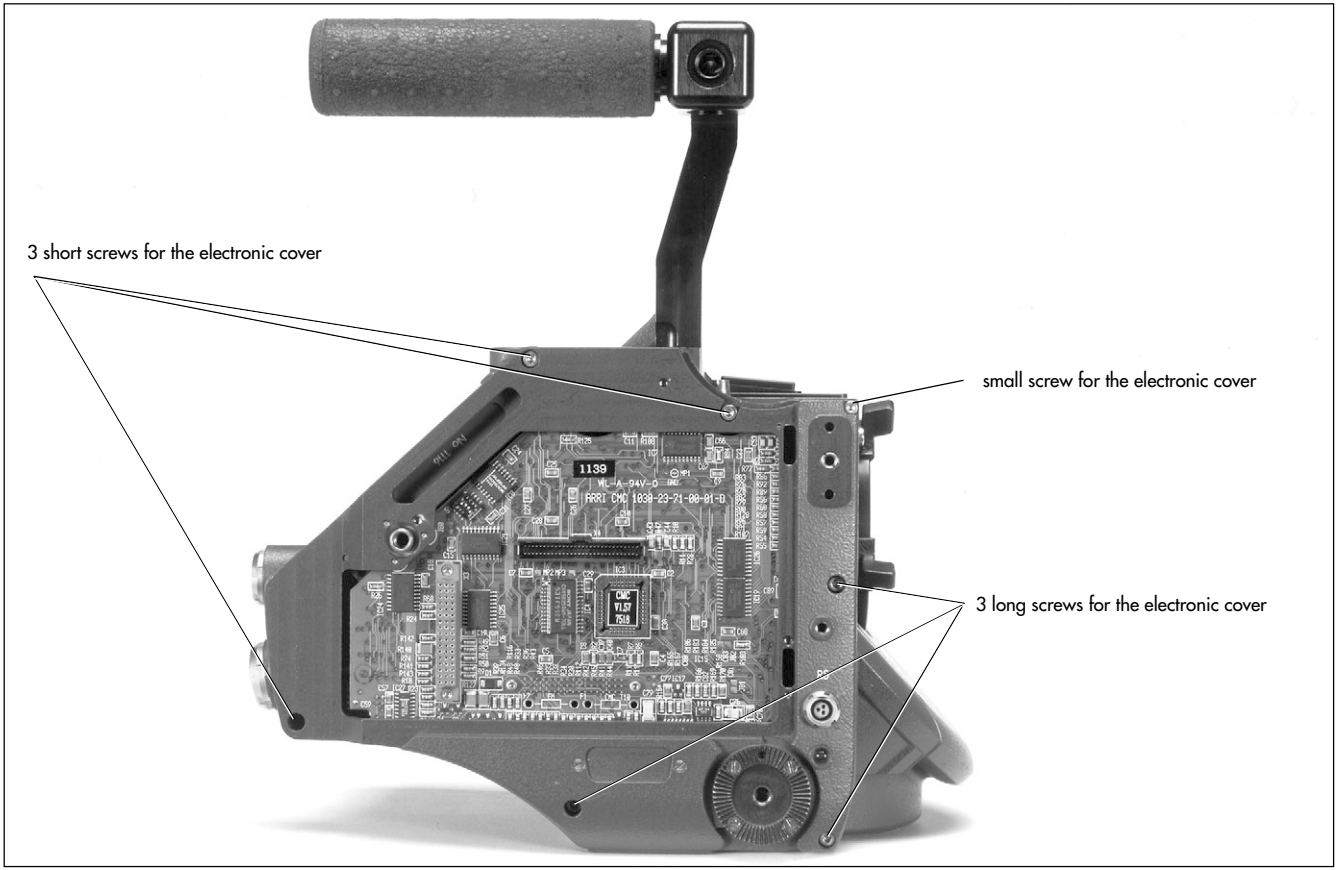
3 short screws for the electronic cover
small screw for the electronic cover
3 long screws for the electronic cover

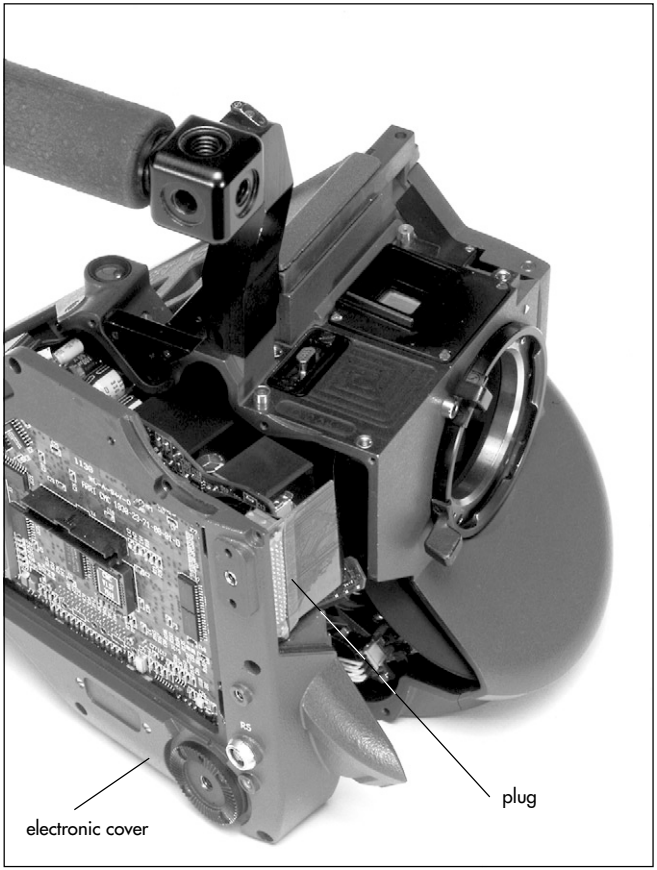

- Now pull off the electronic cover approx. 5 cm away from the camera ➪ **photo**.
- Pull out the big plug ➪ **photo**.
- Lay the electronic cover aside in such a way that the cables in the rear part of the camera do not need to be disconnected ➪ **photo**.
- Disconnect the 3 plugs ➪ **photo**.

Caution: the connectors have metal plates for locking purposes on the sides.

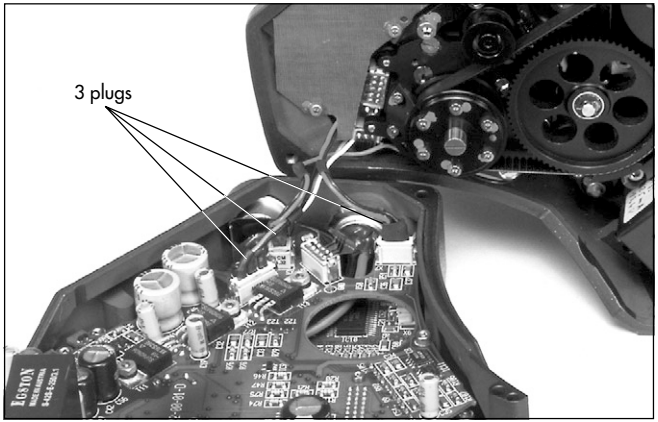

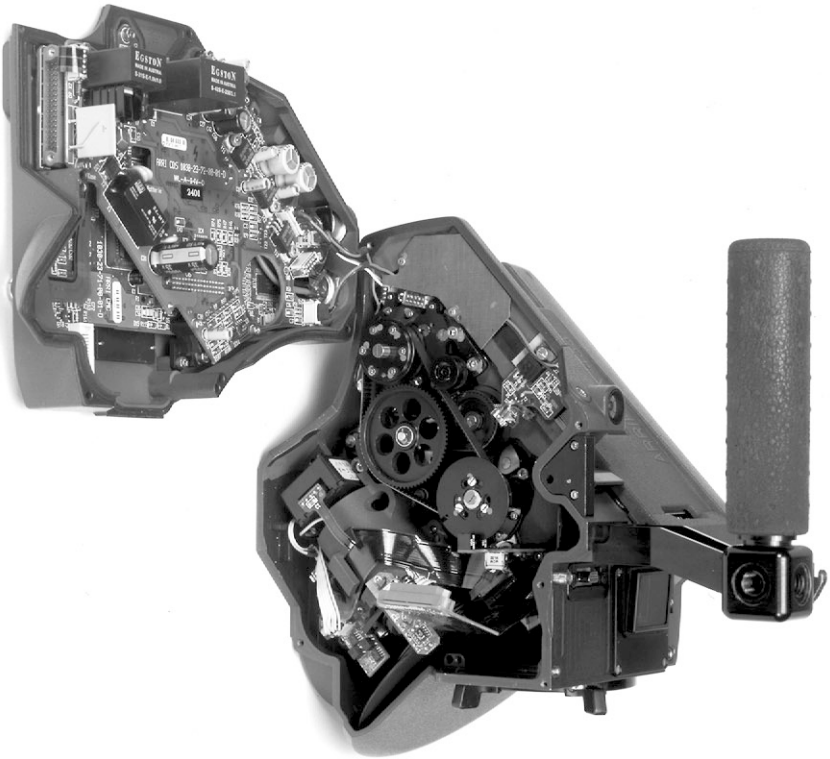

- Now the electronic cover can be completely removed from the camera.
- Disconnect the two small plugs ⇨ **photo**.



Caution: the connectors have metal plates for locking purposes on the sides.

- Unscrew the 4 screws that hold the upper print ⇨ **photo**.
- A 51-pin plug ⇨ **photo** connects the top print plate to the bottom print plate. Hold the print plate close to the connector and pull out the print plate (in doing so the plug is disconnected). The red and black cables which become visible underneath remain connected to the electronic cover.

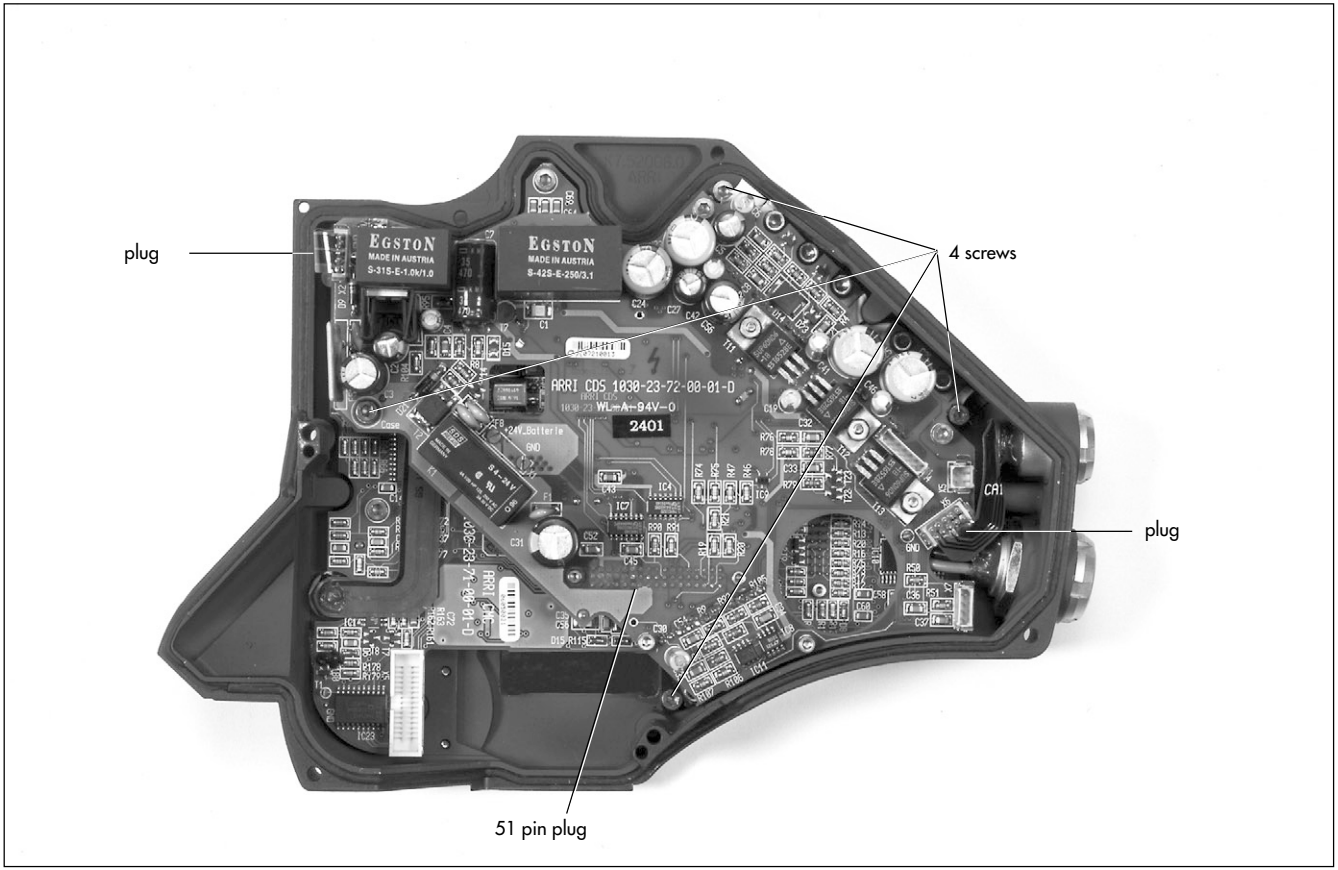
plug
4 screws
plug
51 pin plug
EGSTON
MADE IN AUSTRIA
S-315-E-1.0k/1.0
EGSTON
MADE IN AUSTRIA
S-42S-E-250/3.1
ARRI CDS 1030-23-72-00-01-D
WL-A-94V-0
2401
+24V_Batterie
GND
CA1

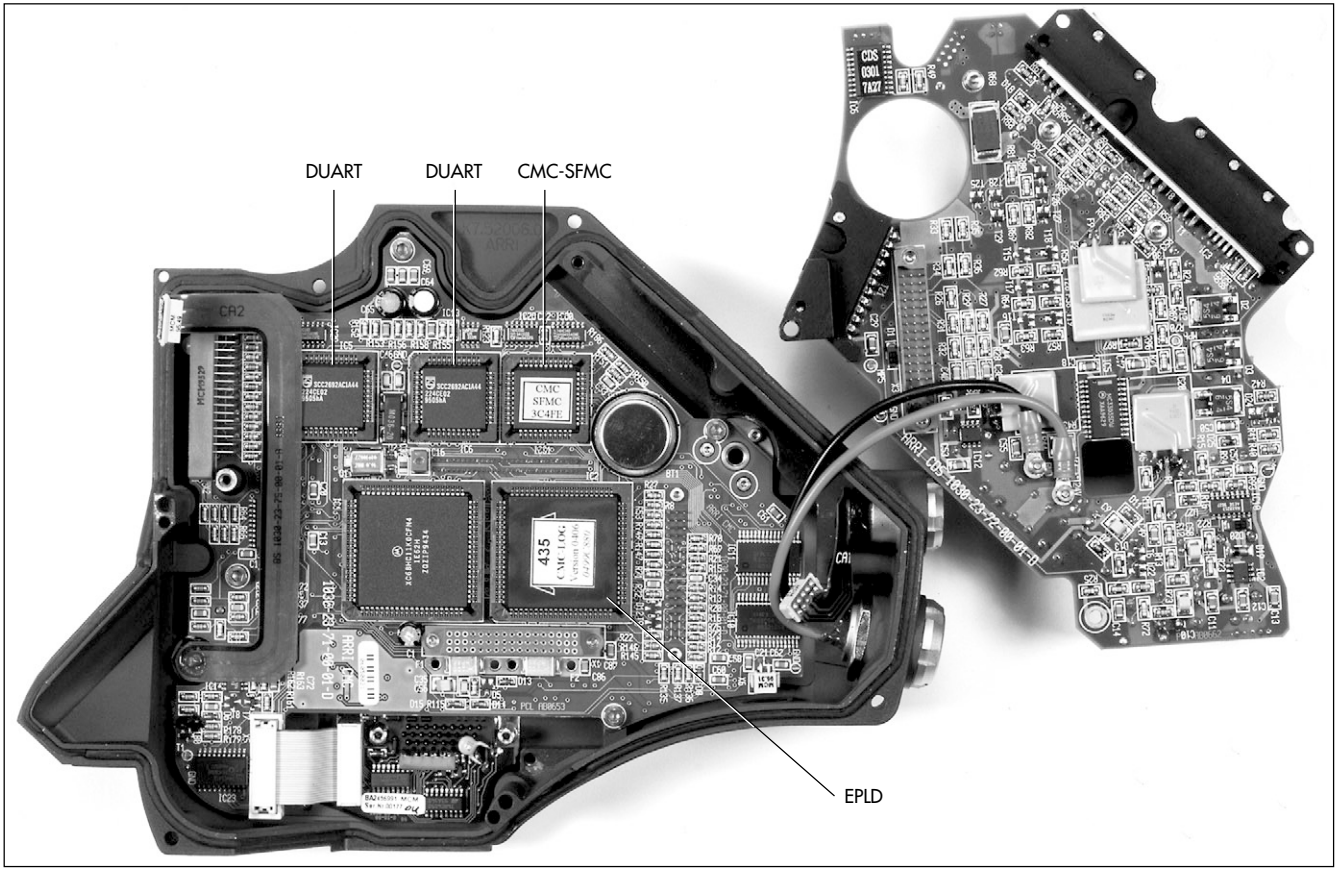
DUART
DUART
CMC-SFMC
EPLD

- Exchange the two DUART ICs labeled SCC2692 (old) and replace with the two new DUARTs labeled SC26C92 and press in firmly.

- Exchange the EPLD IC labeled V0406 (old) and replace with the new EPLD V0502 and press in.

To avoid overbending of the print it must be supported from the back.

- Flip the electronic cover over and replace the EPROM with the delivered EPROM labeled 435 V2.4-4 ➪ **photo**.

Caution: The angle of the IC must coincide with the angle of the socket.

To avoid overbending of the print it must be supported from the back.

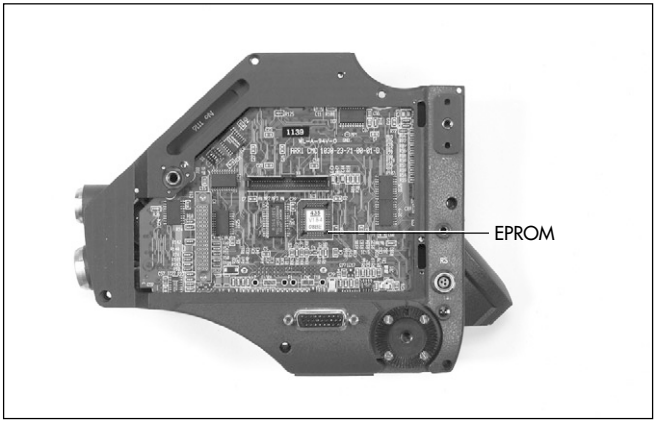

Reassembling the camera

The reassembling of the camera is done in reverse order of the above described steps:

- Align the loose print plate and the print plate in the electronic cover in such a way that the 51-pin connector matches up. Squeeze the connector together and press down firmly; this way the print plate automatically is placed back to the correct position.

Make sure that the red and black cable are not squeezed or crimped.

- Reconnect the two plugs of the top print ⇨ **photo** (page 11).
- Refasten the Print with the 4 screws ⇨ **photo** (page 11) and secure with Locktite 243.
- Replace the electronic cover with the rear end facing towards the back end of the camera. Reconnect the plugs to the camera body ⇨ **photo** (page 8).
- Position the electronic cover up and approx. 5 cm away from the camera. Reconnect the big plug ⇨ **photo** (page 7).
- Place the electronic cover back onto the camera and fasten with the 3 long, the 3 short and the one small screw ⇨ **photo** (page 7).

Make sure when doing so, not to squeeze or crimp the power supply cables.

- Re-attach the electronic cover and/or functional expansion module ⇨ **photo** (page 6).
- Re-attach the viewfinder and lock it into place using the 3 fixing screws ⇨ **photo** (page 6).
- Rotate the mirror once by hand, taking care not to touch the surface of the mirror, and check to see if the mirror brushes against any other parts.

If the mirror brushes against the housing or other parts, the camera should not in any case be switched on and put into operation!
Check mounting procedure again and eliminate fault.

- Connect the camera to the power supply and check the normal camera functions.

3. ARRI Service

Germany ..... Arnold & Richter Cine Technik
Türkenstraße 89
D-80799 München
phone: (089) 3809-0
fax: (089) 3809-1244
fax service: (089) 3809-1793
E-mail service: KDenk@arri.de

USA ..... ARRI USA
617, Route 303
Blauvelt, New York 10913
phone: (914) 353 14 00
fax: (914) 425 12 50
E-mail: arriflex@arri.com

ARRI USA
600 North Victory Blvd.
Burbank, California 91502
phone: (818) 841 70 70
fax: (818) 848 40 28
E-mail: arriflex@arri.com

GB ..... ARRI (GB) Ltd.
The Movie House
1-3 Airlinks, Spitfire Way
phone: (0208) 848 88 81
fax: (0208) 561 13 12
E-mail: sales@arri-gb.com

Italy ..... ARRI ITALIA S.R.L.
Viale Edison 318
20099 Sesto S. Giovanni (Milano)
phone: (02) 26 22 71 75
fax: (02) 242 16 92
E-mail: info@arri.it

ARRI ITALIA S.R.L.
Via Placanica, 97
00040 Morena (Roma)
phone: (06) 79 89 02 02
fax: (06) 79 89 02 39

Canada ..... ARRI Canada Ltd.
415 Horner Avenue, Unit 11
Etobicoke, Ontario
Canada M8W 4W3
phone: (416) 255 33 35
fax: (416) 255 33 99
E-mail: service@arrican.com

Technical data are subject to change without notice.

© ARRI 2000

Ident. No. K5.59125.0

available languages
Deutsch
English

ARNOLD & RICHTER CINE TECHNIK
TÜRKENSTR. 89 • D-80799 MÜNCHEN • TEL. (089) 3809-0
FAX (089) 3809 - 1244 • http://www.arri.com