

THE ARRICAM SYSTEM
USERS' GUIDE

11/2003
Software Version 03E

ALL ARTWORK, PICTURES AND TEXTS ARE COVERED
BY ARNOLD AND RICHTER COPYRIGHT.
THEY MUST NOT BE COPIED FOR REPRODUCTION
(E.G. ON CD-ROM DISKS OR INTERNET-SITES)
OR USED IN THEIR ENTIRE FORM OR IN EXCERPTS
WITHOUT PREVIOUS WRITTEN AGREEMENT.
IF YOU ARE DOWNLOADING PDF-FILES FROM OUR
INTERNET HOME-PAGE FOR YOUR PERSONAL USE,
MAKE SURE TO CHECK FOR UPDATED
VERSIONS.

WE CANNOT TAKE ANY LIABILITY WHATSOEVER
FOR DOWNLOADED FILES, AS TECHNICAL DATA ARE
SUBJECT TO CHANGE WITHOUT NOTICE.

Disclaimer

No part of this document may be copied or reproduced in any form or by any means without prior written consent of ARRI. ARRI assumes no responsibility for any errors that may appear in this document. The information is subject to change without notice. For actual design, refer to the latest publications of ARRI data sheets or data books, etc., for the most up-to-date specifications of ARRI products. Not all products and/or types are available in every country. Please check with an ARRI Sales Representative for availability and additional information.

While ARRI endeavours to enhance the quality, reliability and safety of the ARRI products, customers agree and acknowledge that the possibility of defects thereof cannot be eliminated entirely. To minimize risks of damage to property or injury (including death) to persons arising from defects in the ARRI products, customers must incorporate sufficient safety measures in their work with the system. ARRI or its subsidiaries does not assume any liability for infringement of patents, copyrights or other intellectual property rights of third parties by or arising from the use of ARRI products or any other liability arising from the use of such products.

No license, express, implied or otherwise, is granted under any patents, copyrights or other intellectual property rights of ARRI or others. ARRI or its subsidiaries expressly excludes any liability, warranty, demand or other obligation for any claim, representation, or cause, or action,or whatsoever, express or implied, whether in contract or tort, including negligence, or incorporated in terms and conditions, whether by statue, law or otherwise. In no event shall ARRI or its subsidiaries be liable

for or you have a remedy for recovery of any special, direct, indirect, incidental, or consequential damages, including but not limited to lost profits, lost savings, lost revenues or economic loss of any kind or for any claim by third party, downtime, good-will, damage to or replacement of equipment or property, any costs or recovering of any material or goods associated with the assembly or use of our products, or any other damages or injury of persons and so on or under any other legal theory.

Preface

At the beginning of the 21st century, the entertainment industry more than ever demands broader knowledge and greater skill from contemporary cinematographers. Being used for feature films, miniseries, documentary films, music promos or advertisements, all these different kinds of productions request dedicated and versatile cinematographic equipment. Because of the variety of assignments today and tomorrow, cameras must be mounted on dollies and cranes, on tripods and special rigs, on Steadicam and sophisticated three axis remote controlled heads, operated from the shoulder or on the lap, in several extreme atmospheric conditions – these are only a few out of a wide range of different tasks – nowadays equipment must be flexible enough to allow the best possible work without having to accept compromises. So far, the inventive and creative cinematographer and his/her crew have to get hold of cameras and accessories suitable for all kinds of working situations.

Based on the huge amount of expertise collected during designing and producing such cameras as the ARRIFLEX 435, 535 and 765 or the MOVIECAM Compact and SL as well as with the intention to fulfil most of the desires of today's customers, the two leading companies in the field, ARRI and MOVIECAM, have joined their knowledge and inventive power to build a new line of equipment, unifying the best of two worlds.

It was a real challenge for us to develop a system which allows each cinematographer to set up the appropriate equipment for each particular job more easily than ever before.

The solution was to build up a wide range of compatible accessories around two camera bodies, each one optimised for dedicated operations.

The ARRICAM System Users' Guide we herewith present to you is not simply an instruction manual to a new camera, but a handbook of an equipment line that includes the most quiet compact 35 mm camera for multiple applications and increased utilization.

Please take time to read the following pages carefully. You will see that the ARRICAM System offers you a great variety of possibilities. Like the camera system itself, its System Users' Guide consists of several interchangeable parts that will continuously be updated.

In visiting our home page www.arri.com, you will find all updated information about all components of the system. Furthermore, interesting news and publications can be downloaded from there.

Frédéric-Gérard Kaczek AAC and the ARRICAM Team

Preliminary Remarks

The ARRICAM System is based on two different camera bodies, each one with special characteristics. Even though there are some important differences, several parts of the two bodies are comparable in function and design. Therefore, you will find some common descriptions in the following pages.

Design and technical data are subject to change!

Care and Cleaning

The ARRICAM System is almost maintenance-free. There is only one requirement for a smooth operation: the cameras and the accessories have to be meticulously clean. Therefore you should protect them against any dirt or smudges.
Clean the camera exterior with a glass cleaner. Only when really necessary, e.g. to remove camera tape gum, alcohol or benzine should be used.

Caution!

1. *When cleaning the equipment, do not moisten connectors!*
2. *Never use acetone!*

When applied properly, compressed air is the best cleaner; a vacuum cleaner or an air syringe will do fine.

Cotton tips, orangesticks, soft and hard brushes may be used for gentle cleaning.

Caution!

1. *Compressed air should only be used for blowing the magazines! Apart from this, high pressure does more harm than good, especially to glass surfaces.*
2. *The camera should only be lubricated at a ARRICAM Maintenance Centre!*

Table of Contents

Copyright notes
Disclaimer
Preface 3
Preliminary remarks 4
Care & cleaning 5
Table of Contents 6
Safety and Product specifications 10

1 THE ARRICAM CAMERA BODIES
The cameras' front, dust check, beeper, lens port 17
The cameras' right sides 23
The cameras' rear 25
The cameras' left sides, Door 28
The Camera Control Panels 31
The list of warnings and messages 44
The cameras' top 57
The camera bodies' bases 60
The cameras' interiors, Movement, Aperture Plate, Spacer Plate, Format Masks 61

2 THE MAGAZINES & MAGAZINE ADAPTERS
The four ARRICAM Magazines 73
Care & cleaning 76
The Magazine Cover 77
The Coreholder 78
The Digital Footage Counter 79
Setting unit of measurement and ASA 80
The Tightening Wheels 81
The Remaining Footage Indicator 82
The Loop Protector 84
The ARRICAM Magazine Adapters 85
Mounting/removing the Magazine Adapters 88
Mounting Studio Magazines on Adapters 90
Adapters' Carrying Handles 94
The Studio Mag to Lite Camera Adapter 97

3 LOADING THE MAGAZINES, THREADING THE CAMERAS
Loading the Magazines 101
Mounting Magazines and threading 106

4 THE ARRICAM OPTICAL VIEWFINDERS
Introduction/Overview 121
The ARRICAM Viewfinders 125
The ARRICAM 100% Video Tops (1) 130
Mounting a Viewfinder 132
The Viewfinders' housing 134
Viewing Filter Lever 135
The Viewfinders' Arms 137
Swivelling the Viewfinder Arms 137
Adjustment of the swivel friction 138
Ergonomy 140
Pivoting the Eyepiece 141
Levelling of the Viewfinder image 142
The swing-in de-squeezer 143
The Eyepiece 144
Mounting the Eyepiece 145
The Eyecup 146
The Heated Eyecup 147
The Eyepiece Extensions 148
Viewfinder Levelling Rod 150
The ARRICAM Fieldlens & Ground Glasses 151
The Frameglows 153

5 THE INTEGRATED VIDEO SYSTEM COMPONENTS
Important notes and safety specifications 161
The ARRICAM Video Assists' components 163
The Video Assist 163
The 100% Video Tops (2) 165
Mounting the Video Assists 166
The connectors and the LED indicator 168
The mechanical adjustments of the CCD 173
The Video Assists' Iris control dial 176
The Manual Gain Control button 176
The ON/OFF/CHECK/HIDE MENU switch & LED 177
The Menu/Store dial 178
The Video Assist On Screen Display (OSD) 179
The Video Menu Structure 180
The Video On Board Monitors 209
Control Menu of the 6.6" On Board Monitor 214

6 STUDIO READOUT, THE LENS DATA SYSTEM
Lens Data Screens
Mounting the Readout Unit & function 221
The Lens Data System (LDS) 224
The LDS Lenses 226
The Lens Data Boxes (LDB) 227
Mounting the Lens Data Boxes 229
The ARRICAM Studio LDB Adapter 231
Connectors and control LEDS 233
Connecting Lens Motors to the LDB 237
Lens Data Displays (LDD and LDD-FP) 238
Connecting the Lens Data Displays 241
The LDD and LDD-FP LEDs and controls 243
Function of the Lens Data Displays 246
The LDD Screen 248
The LDD-FP Screen 257
The LDD-FP Menu structure 260
Marking the Focus Scale 263
Focus Tracking 267

7 THE MANUAL CONTROL BOX, THE SPEED CONTROL BOX, THE TIMING SHIFT BOX
Introduction 271
Automatic exposure compensation 272
Stroboscopy, motion blur and depth of field. 272
The Manual Control Box (MCB) 274
The MCB Cable Adaptor 275
The Speed Control Box (SCB) 281
SCB connectors 284
SCB controls and displays 285
Functions and operations of the SCB 292
The ramping function 294
The synchronisation features 297
The Timing Shift Box 301
The Remote Control Station (RCS) 303

8 THE IN-CAMERA SLATE BOX
The In-camera Slate Box (ISB) 309
Mounting the ISB 315
The ISB LEDs and controls 319
Jam-syncing 320
The ISB Handheld PC/Menu Structure 328

9 THE CAMERA SUPPORTS
Supports 345
Carrying Handles 345
Power Bridgeplate 349
The Camera Handgrips 351
The Shoulder Set 353
The Accessory Holders 355
The Universal Low Mode Set 352

10 ARRICAM POWER MANAGEMENT 361

11 MISCELLANEOUS
Standard 35/Super 35 Conversion 371
3 Perforation/4 Perforation Conversion 372
The Work Light 373
Checking the Mirror Shutter manually 374
The Wired Handgrip Attachment (WHA-2 & 3) 376
The Accessory Power Box (APB) 378
Tools 380

12 APPENDIX
Technical Data
Acronyms and Abbreviations
ARRI Group Addresses
Status, Warning and Troubleshooting List
Cables and Connectors
Acknowledgment

THE ARRICAM CAMERA BODIES
Lens Port, Camera Control Panels, Movement, Aperture Plate, Gate, Spacer Plate, Format Masks

THE MAGAZINES AND MAGAZINE ADAPTERS
Studio Magazines, Lite Magazines, Dual Port Adapter, Back Load Adapter, Top Load Adapter, Studio Mag to Lite Camera Adapter, Lite Mag to Studio Camera Adapter

LOADING THE MAGAZINES, THREADING THE CAMERAS

THE ARRICAM OPTICAL VIEWFINDERS
Studio Viewfinders, Lite Viewfinders, Viewfinder Extension, Eyepiece, Ground Glasses, Frameglows, Frameglow Masks

THE INTEGRATED VIDEO SYSTEM COMPONENTS
Studio Video Assist, Lite Video Assist, 100% Video Tops, On Board Monitors

STUDIO READOUT, THE LENS DATA SYSTEM
LDS Lenses, Lens Data Boxes, Lens Data Displays, Lens Data Screens

THE MANUAL CONTROL BOX, THE SPEED CONTROL BOX, THE TIMING SHIFT BOX
MCB Adapter Cable, Remote Control Station

THE ARRICAM IN-CAMERA SLATE SYSTEM
In-camera Slate Box, Exposure Module, Handheld PC, OCR

THE CAMERA SUPPORTS
Power Bridgeplate, Shoulder Set, Carrying Handles, Brackets, Universal Low Mode Set, Dovetail Attachment System

ARRICAM POWER MANAGEMENT
Batteries, Power Supply Unit

MISCELLANEOUS
35/Super 35 Conversion, Work Light, 3/4 Perforation Conversion, Shutter Check, Wired Handgrip Attachment, Accessory Power Box, Tools

APPENDIX
Technical Data, Acronyms, Addresses, Cables and Connectors

Safety Specifications

Warnings

Notice

Operational error possible!
Danger of injury or equipment damage possible!

General Safety Specifications

Caution! *Danger of injury! Never place your hand in the lens port or inside of the camera while it is RUNNING.*

- In order to ensure optimal performance, it is essential that you acquaint yourself with this Users' Guide.
- Assembly and initial operation should be carried out only by persons who are familiar with the equipment!
- Switch *OFF* the camera MAIN switch before making electrical connections (i.e. plugging on accessory boxes)!
- Never *RUN* the camera without a lens or a protective cap mounted in the lens port.
- Never operate the movement locking mechanism while the camera is *RUNNING*!
- Ensure that the camera is securely mounted!
- Remove the battery cable before transport or servicing!
- Repairs should be carried out only by authorized service centres!
- Use only original ARRI replacement parts and accessories!

Important Notes

- In wet weather the normal safety precautions for handling electrical equipment should be taken.
- Avoid operational errors!
- Clean optical surfaces only with a lens brush or a clean lens cloth! In case of solid dirt moisten a lens cloth with pure alcohol.
- Do not use solvents to clean the film gate!
- Do not remove any screws which are secured with paint!

Product Specifications

In case of enquiries or when ordering parts, please advise camera serial number and model.

Notice

This Users' Guide applies to the ARRICAM Studio and the ARRICAM Lite as well as the whole ARRICAM Accessory range. Sections that only apply to one camera model or accessory type are indicated as such in the heading.
Several items described in this Users' Guide are in preparation.
Because ARRI has already published several dedicated manuals about accessories, e.g. Follow Focus or Matte Boxes, this components are not described here.
The products and accessories recommended by the manufacturer fulfill the specifications of the EU-Guideline 89/336/EWG.





1 CAMERA MAIN SWITCH (ON/OFF)
2 POWER CONNECTOR (24 V)
3 CAMERA ACCESSORY CONNECTOR (CAC)
4 CAMERA ACCESSORY PORT COVERS
5 STUDIO VIDEO ASSIST
6 FOOTAGE COUNTER
7 STUDIO MAGAZINE 300/1000
8 STUDIO VIEWFINDER
9 LDS LENS
10 MATTE BOX (MB 14)
11 ATTACHMENT ROSETTE
12 FOLLOW FOCUS
13 STUDIO MEDIUM EXTENSION
14 MANUAL FOOTAGE INDICATOR
15 TIGHTENING WHEEL
16 TOP LOAD ADAPTER WITH HANDGRIP
17 CAMERA DOOR
18 TAPE MEASURE HOOK
19 STUDIO DOOR FRICTION ADJUSTMENT SCREW
20 CAMERA CONTROL PANEL WITH RUN BUTTON
21 BASE PLATE
22 LIGHTWEIGHT MATTE BOX (LMB 5)
23 LITE VIEWFINDER
24 LITE CARRYING HANDLE
25 LITE VIDEO ASSIST
26 LITE SHOULDER MAGAZINE
27 SHOULDER PAD
28 RISER PLATE (SHOULDER SET)
29 LEFT HANDGRIP
30 RIGHT HANDGRIP WITH RUN BUTTON

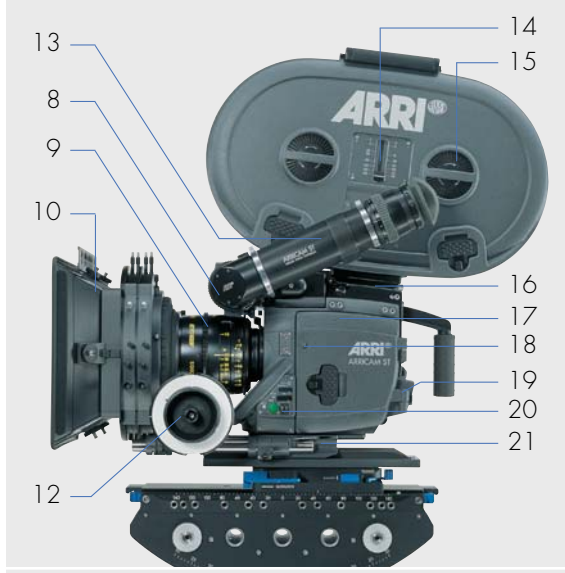



STUDIO



LITE



THE ARRICAM CAMERA BODIES

The Camera Bodies

The cameras' front

On the front of both cameras, an LDS 54 mm ARRI PL (positive lock) lens port accepts lenses (spherical or anamorphic) fitted with either LDS PL or with the well established regular PL mounts. Depending on the orientation of the lens port, the ARRICAM Cameras will allow shooting in either Standard 35 or Super 35 format. The shooting mode is shown by the number **1** (for 35) or **2** (for S35) facing the index.

Notice

It is recommended an ARRICAM Maintenance Centre or rental house performs the change of format from 35 to S35 or vice versa. If you must do it yourself, please see the related instructions in chapter 11 – Miscellaneous.

The ARRICAM Cameras are equipped with LDS PL mounts which differ from the regular PL mounts of the ARRIFLEX and MOVIECAM cameras in that they are equipped with electrical contacts that communicate lens data to the camera. Two sets of LDS contacts are integrated in each lens port to allow the fitting of the lens according to the needs of the focus puller: The index lines of the lens can be seen from the top and the bottom or left and the right side of the camera

Notice

Even though there is a difference between the LDS PL mount and the regular PL mount, all 35mm lenses fitted with PL mounts can be mounted in the new LDS PL port.

Studio front fig.1/1

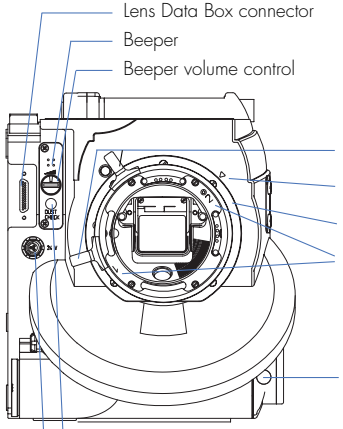

Lite front fig.1/2

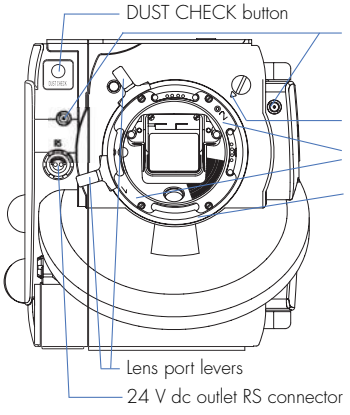

To remove a lens (or lens port cover), rotate the lens port levers counter-clockwise as far as possible while grasping the lens firmly. Then carefully remove the lens.

To fit a lens, align guide groove in the lens flange with locating pin in the lens port. Insert the lens flange flat on the receptacle, making certain the pin engages the lens-flange hole easily. **Rotate lens lock gently** clockwise to secure until the lens is seated properly. **Do not use force!**

Notice

1. *Especially with heavier lenses, great care must be taken that the lens is mounted in a straight line with the port.*
2. *The LDS Lens must be mounted in the 12 o'clock or 3 o'clock position to enable the LDS functions.*
3. *When attaching the lens or lens port cover, take great care not to harm any elements (e.g. LDS contacts).*
4. *Heavy and long lenses, such as ZEISS Variable Prime Lenses or zoom lenses, must be supported at all times by means of dedicated accessories.*
5. *When mounting an LDS Lens, one must be sure that the contacts and the mount itself are perfectly clean in order to assure good electricronic communication as well as an even fit of the lens on the camera port.*

Both Studio and Lite

THE DUST CHECK BUTTON

Because the mirror and the movement are driven separately, moving the mirror by means of the inching knob is not possible. It is also recommended not to move it manually, there is danger of damage. To check the gate, either by looking through the lens or by removing it, turn the mirror out of the way by briefly pushing

the DUST CHECK button. Even when shooting with a reduced shutter angle, operating the DUST CHECK button, will open the shutter to 180° and DC will appear on the FPS display(s).

Caution!
When you need to clean the gate, it is imperative to turn OFF the camera power first.

After having cleaned the gate, turn the power *ON* and briefly push the DUST CHECK button to turn the mirror into the viewing position – the shutter will return to its preset angle again automatically.

Studio front fig.1/3

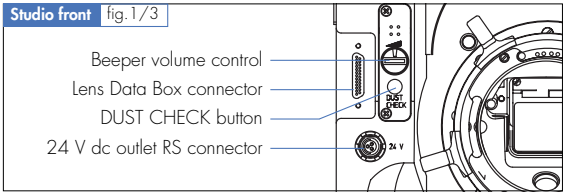

Lite front fig.1/4

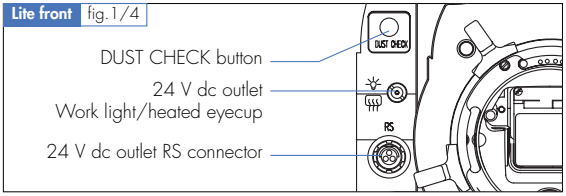

On the Studio and Lite
24V OUTLET RS CONNECTOR

To the left of the lens port there is a 24 V outlet marked RS (*RUN*). This three-pin Fischer connector is protected by a 1.6 A resettable fuse and may be used to remote control the camera status *RUN* or *STOP* as well as for supply power to any kind of 24 V accessory, e.g. a zoom drive.

Only on the Studio

BEEPER AND BEEPER VOLUME CONTROL

Only the ARRICAM Studio is equipped with a beeper. Its volume can be increased in three steps by turning the switch clockwise. The number shown on the switch will indicate the adjustment: 1=low, 2=medium and 3=loud. When selecting the position 0, the beeper is *OFF*. When the beeper is not turned *OFF*, it will sound briefly when the camera is in *RUN UP* or *RUN DOWN* status. It will beep intermittently as long as the camera is *RUNNING* in *ASYNC* status.

On the Studio

LDB CONNECTOR

Hidden behind the front right side camera cover (fig. 1/3), a large connector is mounted on the camera front. When the cover is removed, either a Lens Data Box Cable Adaptor or the Studio Lens Data Box itself can be attached to this connector.

On the Lite

24 V HEATED EYECUP/WORK LIGHT OUTLETS

On both sides of the lens port, small connectors supply the 24 V dc power for the following two accessories: the Work Light and the Heated Eyecup.

Studio right side fig.1/5

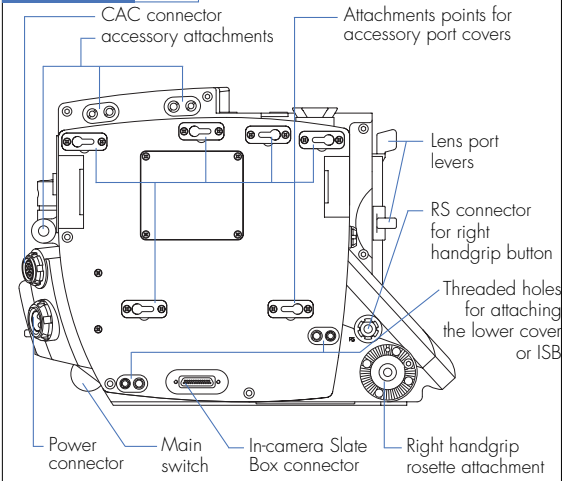

Lite right side fig.1/6

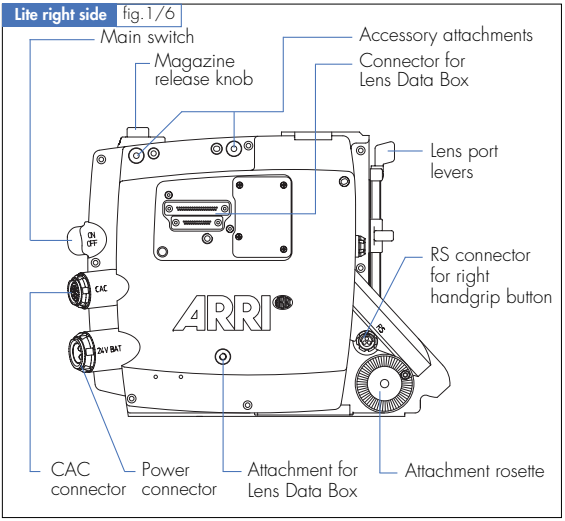

The cameras' right sides

On the Studio and Lite
RIGHT HANDGRIP ROSETTE ATTACHMENT

The right handgrip is screwed into the threaded socket in the rosette centre.

On the Studio and Lite
CONNECTOR FOR THE RIGHT HANDGRIP RUN BUTTON

The 24 V RS connector can either be used to supply 24 V for accessories or to connect a switch for changing between the *RUN* and *STOP* (i.e. *Standby*) status.

On the Studio and Lite
ACCESSORY ATTACHMENTS

The Carrying Handle or e.g. Universal Low Mode Bracket is attached to the threaded sockets and gauged holes on top of the right camera side.

On the Studio and Lite
PROTECTION COVERS

Covers fig.1/7

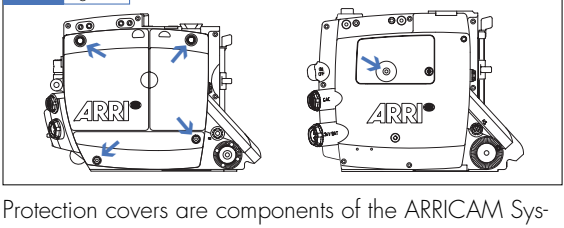

Protection covers are components of the ARRICAM System and should be handled with care. When removing them from the camera bodies, store them immediately in

their cases. When no accessory box or cable adapter is mounted on the camera, the appropriate protecting cover **must be fitted** instead of it to protect the sensitive connectors!

On the Studio only
RELEASE KNOB OF THE UPPER PROTECTION COVERS

To remove an upper protecting cover, press the release knob and slide the upper front cover forward or the upper rear cover backwards. When mounting the protection covers, be sure that they are flush to the camera before sliding them into the locked position.

Notice

Do not tilt the upper covers during mounting or removing, and do not use force!

By removing the upper front cover the connector for the Studio Lens Data Box (ST-LDB) will appear.
By removing the upper rear cover the connector for the Speed Control Box (SCB) will appear.

On the Studio only
RELEASE SCREWS OF THE LOWER COVER

Remove the lower cover for mounting the In-camera Slate Box (ISB).

On the Lite only
RELEASE SCREW OF THE COVER

To mount the LT-LDB on the Lite, you must first remove the cover by unscrewing one 3 mm hex screw.

The cameras' rear

On the Studio and Lite
CAC CONNECTOR FOR ACCESSORIES

The 16-pin Fischer connector, mounted obliquely for convenience and labelled CAC (camera accessory connector) is the main communication port of the cameras. Several accessories can be attached there. For further information see the accessory descriptions and the fig. 1/8 and 1/9 on page 27.

POWER CONNECTOR

The 2-pin Fischer power receptacle, mounted obliquely for convenience, is used to connect a 24 V battery or a 24 V dc Power Supply Unit. Further information about the power supply and power distribution of the ARRICAM System is described in chapter 10 – Power Management.

MAIN SWITCH

Protected by two flanges, the MAIN switch will interrupt the power supply of all electronic components, except the one of the clock in the In-camera Slate Box – it remains powered to keep the clock working.

SCREWS FOR MAINTENANCE PURPOSES ONLY

On both camera bodies, there are several screws which are dedicated for maintenance work only. These screws are marked with a special seal lacquer and/or a safety label.

Caution!
Do not touch these screws, otherwise severe damage can occur!

CAMERA OPENINGS

One of the main differences between the two camera bodies is that you are able to mount Studio Magazines in one of three different positions (top, back or inclined) on the Studio by means of the various magazine adapters while the Lite allows the attachment of the lightweight Lite Magazines at the rear only. In order to install Studio Magazines on the Lite, you will have to use the Studio Magazine to Lite Camera Adapter. Lite magazines may now be mounted on the Studio, in the rear position only, by means of the Studio Camera to Lite Magazine Adapter.

On the Studio only

REAR CAMERA OPENING AND MAGAZINE ADAPTER ATTACHMENTS

In order to mount one of the four Studio Magazine Adapters, fit the adapter on the camera body while taking care that the two adjusting pins enter the threaded holes easily. Then you will have to tighten the six retaining screws firmly – see caution on page 88.

On the Studio only

CONNECTORS FOR THE SCB AND MCB/TSB

These two connectors allow the mounting of the Speed Control Box (SCB) and the Manual Control Box (MCB) or Timing Shift Box (TSB) – see chapter *7*.
Both connectors must be protected by covers if not used.

Notice

To use the Manual Control Box (MCB) or the Timing Shift Box (TSB) and the Speed Control Box (SCB) together, you must first mount the SCB and then the MCB/TSB. To remove the SCB, you will first have to remove the MCB/TSB from the camera: The MCB/TSB physically blocks the attachment and removal of the SCB

Studio rear fig.1/8

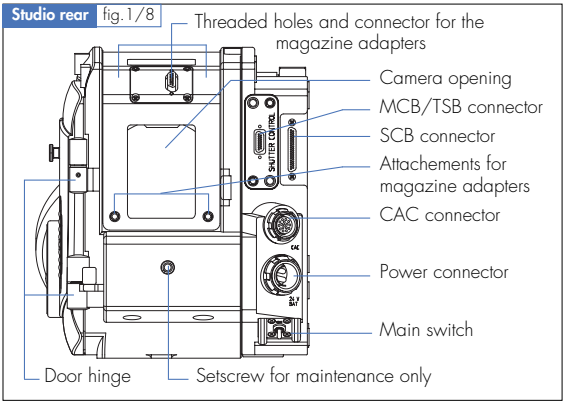

Lite rear fig.1/9

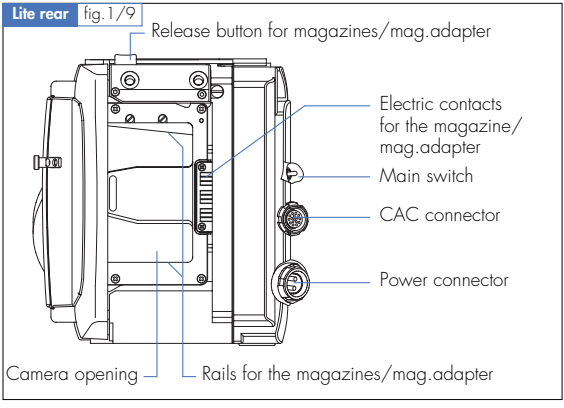

The cameras' left sides

On the Studio and Lite
THE CAMERA DOOR

The door is located on the camera's left side. To open the door, push the little spring-lock forwards and lift the lock latch, then turn the lock latch counter-clockwise. When closing the door, press it gently towards the camera body and then turn the lock latch clockwise. When it is closed, the door lock latch must be flush with the door; the spring-lock keeps the lock in this position.

Notice

When closing the door, be sure that the movement, the film guides and the buckle switch are placed in the correct position. When the movement is in its loading position, the door cannot be closed.

Door Lock fig.1/10

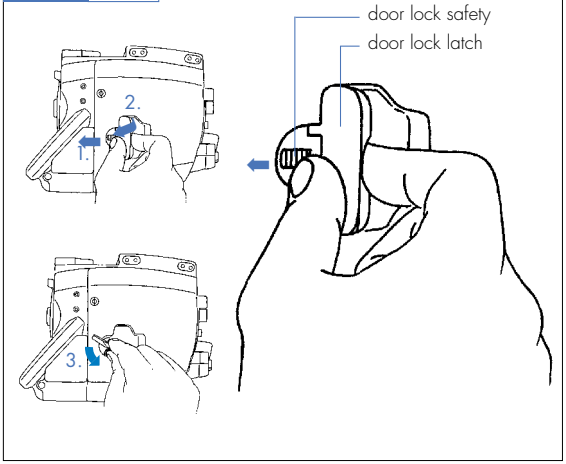

On the Studio and Lite

HOOK FOR TAPE MEASURE

The tape measure can be attached to the hook that indicates the image plane. Further hooks are provided on several accessories.

On the Studio only

ADJUSTABLE DOOR HINGE AND REMOVABLE DOOR

Should you want to alter the friction of the door use a 2 mm metric hex wrench to adjust the screw at the top of the lower hinge until the desired friction is set.
To remove the door, loosen this screw fully, then by pressing and holding the lever, lift the door up clear of the hinges. When mounting the door on the camera, take care that the hinge-pins enter the hinges properly.

Studio Door fig.1/11

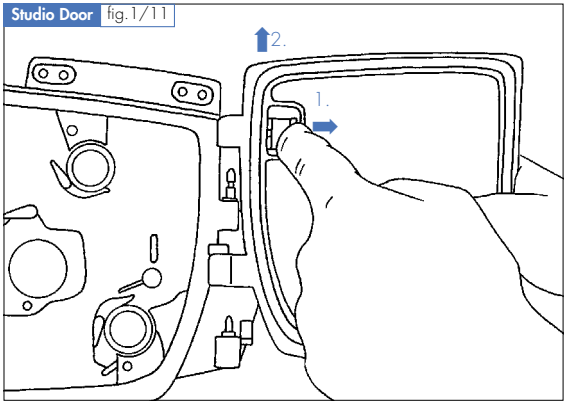

Studio left side fig.1/12

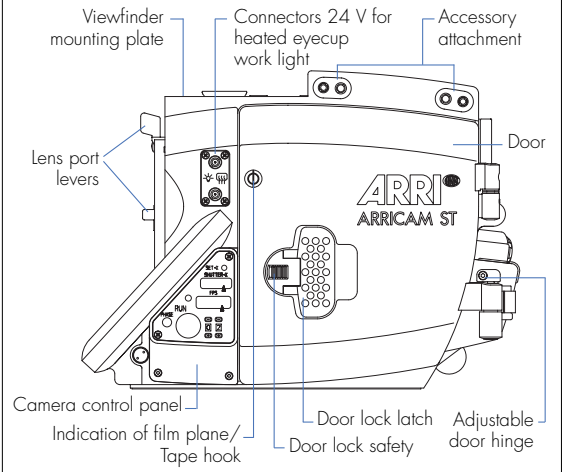

Lite left side fig.1/13

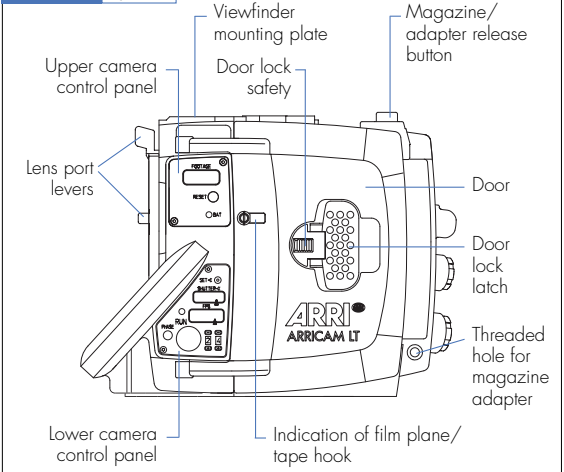

On the Studio only
CONNECTORS

Power (24 V) for the Heated Eyecup and the Work Light is supplied via two co-axial connectors.

On the Studio only
ACCESSORY ATTACHMENT

The two threaded sockets and two gauged holes on top of the camera left side allow mounting of several accessories including a bracket for Steadicam, a similar support system or the modular ARRICAM Carrying Handle System.

The cameras' control panels

On both, the Studio and the Lite, most of the functions are controlled and monitored by means of the Camera Control Panels. These Panels are located on the camera left side to be easily accessible and visible for the operator and the focus puller. There are two types of Control Panel in circulation: The original Standard Camera Control Panel and the newer Extended Camera Control Panel. (The Standard may be upgraded to an Extended through a workshop procedure).

The Studio and the Lite Standard Control Panels are equipped with FPS push wheel input units. On the Extended Camera Control Panels, FPS and Shutter opening are set by means of finger operated buttons instead of recessed ones that require a small poited tool to operate. Furthermore, the Studio Extended Camera Control Panel has a third display to show the film length.

The Extended Camera Control Panels also allow the user to select several settings offered in the display options' menu.

BASICS

All messages shown on the displays of several components (Camera Body, Accessory Boxes, Video Assists, Readout Unit, etc.) are generated by computer software (SW). Together with a firmware (FW), the software is integrated in the camera bodies and several system components.

Depending on the type of Camera Control Panel (Standard or Extended), different indications and messages will be shown on the FPS display. As with other computer systems, and based on the feedback by ARRICAM Users, the software and also the firmware will be updated when necessary. Therefore it is advisable to know the version of the software and firmware installed in your camera.

Also when requesting information, the technician will ask you the software and firmware version number. Last but not least, is also necessary to be aware that some messages can be changed without notice when the system is updated. This User's Guide is updated to cover the release of version 03E.

Because some messages are exclusively for the ARRICAM Maintenance Personnel, they are not listed in this Users' Guide.

The Option mode allows the user
- to define the threshold voltage value that must be reached to initiate the low battery warning.
- to check the software/firmware version installed in the system components.

Extended Camera Control Panel fig.1/14

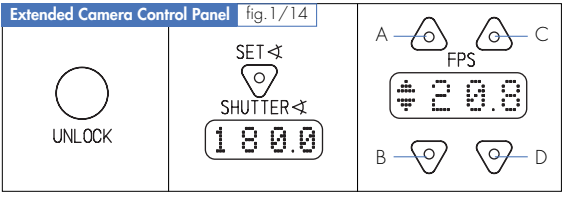

Setting the threshold voltage of the low battery warning

To set the threshold voltage of the low battery warning, first turn *OFF* the camera power. Then, enter the Option mode by holding the BRIGHT button on the Camera Control Panel (camera left side) pressed and turn *ON* the camera MAIN switch.

Now the following messages will be displayed:

display:	shutter	FPS	Footage
text:	**LBat**	**NiCd** or **User**	

Nicd shows that the low battery warning is set to a default value for Nickel Cadmium batteries. This default value is set in the factory and cannot be changed by the users.

If a Lithium Ion or 26.2 volt NiCad battery is used, a different low battery voltage is needed. To change it, select the **User** mode by pushing the button "C" or "D" – see fig. 1/14 above.

When **User** is displayed, pushing the button "B" will change the display as follows:

display:	shutter	FPS	Footage
text:	**LBat**	**V21.7**	**User**

By pushing the buttons "C" or "D", the threshold voltage can be set anywhere from 20.0 V to 29.9 V.

To save the change of the threshold value in the system, either push the PHASE button on the Extended Camera Control Panel or switch *OFF* and *ON* the camera MAIN switch.
While pushing the PHASE button, the actual voltage of the power supply will appear on the FPS display.

Checking the software and firmware version installed in several components
To find out which SW or FW version is actually installed, first turn *OFF* the camera power, then, enter the Option mode by holding the BRIGHT button on the Camera Control Panel pressed (camera left side) and turn *ON* the camera MAIN switch.

Now the following messages will be displayed:

display:	shutter	FPS	Footage
text:	**LBat**	**NiCd** or **User**	

By pushing button "B", the display will change as follows:

display:	shutter	FPS	Footage
text:	**CLD**	**V100**	**SW**

This means that the Software Version 100 has been installed in the Camera Control Panel. (CLD=Camera Left Display) By pushing either "C" or "D", the display will change to a next component or to FW if SW is already shown.

display:	shutter	FPS	Footage
text:	SCB	104c	FW

Caution!

If a figure (software or firmware version) shown on the FPS display is blinking, it means that the installed software/firmware is incompatible with other software/firmware already installed.

Whenever this happens, push the PHASE button to clear the warning.

Notice

Only in case of a very serious problem (risk of damaging the camera, risk of wrong film exposure) will the RUN LED glow red to indicate that the camera is not ready to shoot. In this case, call your ARRICAM Maintenance Centre.

Usually, a software/firmware incompatibility will not affect the system and the camera will stay ready to shoot. However, the indication of the incompatibility will appear each time the camera is turned *ON*. This is to remind you to consult a Maintenance Centre as soon as you can. When the warning is displayed, basic camera functions (correct exposure & film handling) will still work although some accessories may not.

To leave the Option mode, push either the PHASE button or switch the camera MAIN switch *OFF* and *ON*.

OPERATING THE EXTENDED CAMERA CONTROL PANEL

In order to set fps or shutter angle on the Extended Camera Control Panels, hold the unlock button while pushing the selectors' buttons. Otherwise **LOCK** will appear in the related display when a setting button is pushed.

ACRONYMS

SCB speed control box
MCB manual control box
TSB timing shift box
LDB lens data box
LDD lens data display
WRC wireless remote control
ISB in-camera slate box
CCB camera control box (ARRIMOTION/Jogbox)
SW software
FW firmware
CLD camera left display (Camera Control Panel)

RUN BUTTON

Provided that the main power supply is switched *ON* and the camera is *READY* (e.g. film is laced correctly, power supply is ok), the camera will start to *RUN* when either the RUN button on the Camera Control Panel or one of the other RUN buttons, e.g. on the Handgrip, on the Speed Control Box or on a remote control unit is pressed. Any of those RUN buttons can be employed alternately to change the status of the camera *RUN* or *STOP* and vice versa.

RUN LED INDICATOR

The RUN LED is off while the camera is in *Standby* or not powered. When the camera is started, the RUN LED will glow red while the camera is coming up to speed, changing to green once the camera is *RUNNING* at the preset frame rate. When a RUN button is pushed again to stop the camera, the RUN LED will glow red while the camera *SLOWS DOWN*, going out when the camera has stopped *RUNNING*.

Notice

If the RUN LED glows red while the camera is not RUNNING, it indicates that the camera is NOT READY. – pushing a RUN button will have no effect. If the camera is powered, the cause why the camera is not in Standby status will be displayed on the FPS displays – see page 44.

FPS SELECTOR

While the camera is *NOT RUNNING*, frame rates from 1 to 40 (Lite) or 1 to 60 (Studio) can be preset. If a higher rate is erroneously preset and the RUN button is pressed, the camera will not start to *RUN* and the display will show **FPS!**.

Notice

If an SCB is connected to the camera and it's SPEED CONTROL switch is set to ON, the FPS selector on the camera left side is put overridden and either **SCB** *will show on the FPS display of the Standard Camera Control Panel or the value preset on the SCB will show on the FPS display of the Extended Camera Control Panel while the camera is Standby. As soon as the camera is RUNNING, the actual fps rate will be shown.*

Studio Standard Camera Control Panel fig.1/15

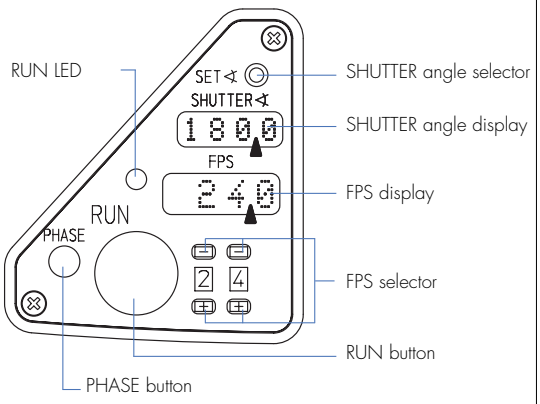

Studio Extended Camera Control Panel fig.1/16

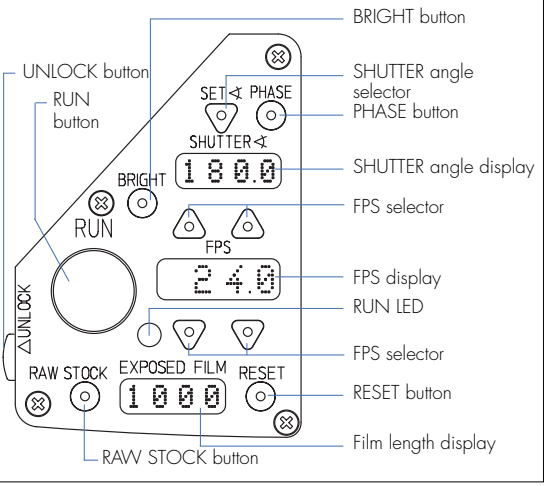

Lite Standard Camera Control Panel fig.1/17

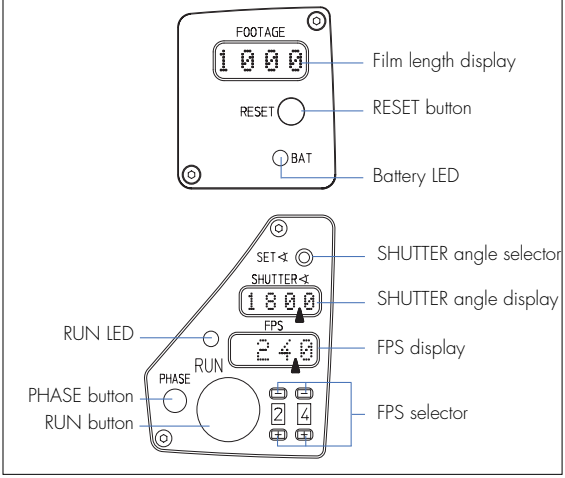

Lite Extended Camera Control Panel fig.1/18

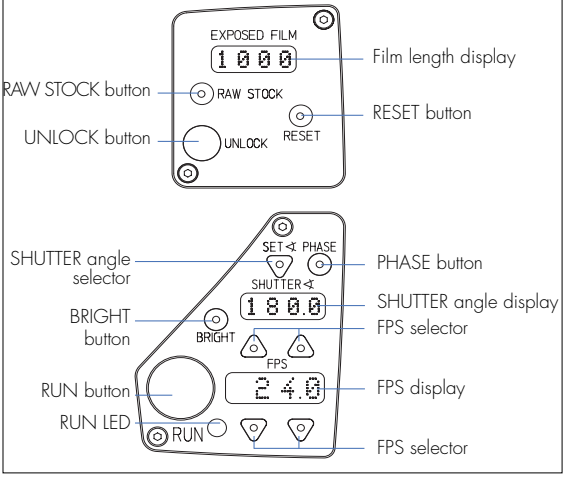

One advantage of the Extended Camera Control Panels is that you can also enter the following preset frame rates:

shown on control panel	real setting
6.2 fps	6.25 fps
12.5 fps	12.5 fps
16.6 fps	16.666 fps
23.9 fps	23.976 fps
29.9 fps	29.97 fps
33.3 fps	33.333 fps

All settings are only possible while the camera is not *RUNNING*. **RUN** will appear in the related display if a setting button is pushed while the camera is *RUNNING*.

If a component such as the SCB, the MCB or the WRC has control over the shutter opening, no setting of the shutter angle is possible by means of the Camera Control Panel buttons and the controlling device will be displayed.

SHUTTER ANGLE SELECTOR

While the camera is in *STANDBY*, you may change the shutter angle either by pushing with a pointed item – e.g. toothpick – the little selector protected by the Plexiglas cover on the Standard Camera Control Panel or by pushing the button on the Extended one. As soon as one is pushed, the shutter advances to the new setting. The value cycles through the following steps:

11.2°	22.5°	30°	43.2°	45°	60°	75°	86.4°
90°	105°	120°	135°	144°	150°	172.8°	180°

PHASE BUTTON

Depending on the status of the camera, the PHASE button allows two different operations.

When the camera is in *STANDBY:*
While pressing the PHASE button continuously, the *INCHING* mode is activated and the movement will *RUN* at 1 FPS as long as the button is held down. When the button is released, the mirror shutter will automatically park in the viewing position.

While the camera *RUNS* in the *INCHING* mode the power supply voltage will be displayed in the FPS display as e.g. **V 24.6**.

When the camera is *RUNNING:*
pushing the PHASE button will increase the preset FPS rate by 0.2 fps as long as the button is held down. This also works when e.g. the SCB or another remote device controls the fps rate.

Exceptions:

While the camera is controlled
- by an SCB, the SCB switch is set to SYNC and the PHASE switch is set to *FIXED*,
- by a Video Assist external synchronization signal.
- by an In-camera Slate Box synchronization signal.
- by an external device and *RUNNING* a *SPEED RAMP* the PHASE button is inactive. When it is pushed, the FPS display will show **FIXD** as long as the button is held pressed.

RAWSTOCK

While the camera is in *STANDBY* press and hold the RAWSTOCK button to display the film reserve as set by the magazine.

BAT LED INDICATOR

The bat LED (Lite Standard Camera Control Panel only) lights up red in case the supply voltage drops below the threshold value defined in the option mode. The same indication is provided on the other Camera Control Panels by a warning message on the FPS display.

FPS DISPLAY

Regarding the brightness control of displays
Many components of the ARRICAM System are fitted with similar displays. The brightness of all these displays can be adjusted to the needs of the users by means of the dimmers located e.g. on the Speed Control Box, on the Manual Control Box or on the Studio Readout. The adjustment of the display brightness will automatically affect all components connected to the camera body, so individual adjustment for each display is not possible.

Regarding the messages shown on the FPS displays
All messages described on the following pages are generated by the ARRICAM SW Version 3.0E When requesting information from ARRICAM Maintenance Technicians, please mention the version of the software installed on your camera. (see Checking the Software and Firmware section on page 34)

If another accessory has control over the camera the Extended Camera Control Panel shows what speed the

camera will run on its FPS display. At the same time, the controlling component is shown e.g on the Studio Read-out. As soon as you attempt to change the FPS value on the Extended Camera Control Panel, its FPS display will show the component which actually controls the camera (e.g. MCB, SCB, WRC) – no changes will be possible there.

The four digit display marked FPS will not only show the actual frame rate while the camera is *RUNNING*, but will also serve as an important central information display. Warning messages will alternate with the fps values. If there is more than one warning message, they will alternate at a two seconds frequency.

When there is no reason for displaying warning messages, the FPS displays will inform about the following status.

Notice

As soon as the camera detects that the software of any of the system components (e.g. Lens Data Box, Video Assist) is incompatible, the warning **SW** *will appear on the FPS displays and the camera will go to NOT READY. Simultaneously,* **Phse** *will appear on the SHUTTER displays. By pushing one of the* PHASE *buttons, the warnings will disappear and the camera goes to Standby. The warnings will appear automatically when the camera is powered ON in order to remind you to ask an ARRICAM Maintenance Centre to up-date the system as soon as possible.*

MESSAGE	Explanation of the message, glows
(MESSAGE)	Explanation of the message, glows alternately with an other message
((MESSAGE))	Explanation of the message, blinks
«MESSAGE»	Explanation of the message, blinks fast
STANDBY NOT READY RUNNING REMARK	The indicated status informs why the camera is e.g. not ready or which component has control over the camera.

LIST OF MESSAGES AND WARNINGS on the FPS display

(Software Version 3.0E)

	FPS DISPLAY
	Camera is not powered.
.... **REMARK**	Electronic problem. An electronic problem occurs that can only be fixed by Maintenance Technicians.
running point **REMARK**	Electronic problem. An electronic problem occurs that can only be fixed by Maintenance Technicians.
0.0 **STANDBY**	Camera is not *RUNNING*. Camera is ready to shoot with the preset fps shown on the FPS selector (Standard Camera Control Panel) or displayed (Extended Camera Control Panel).
24.0 **RUNNING**	Camera is *RUNNING*. Camera is *RUNNING* with the preset fps (e.g. 24 fps).

-12.0
RUNNING
Camera is *RUNNING REVERSE*.
The camera is *RUNNING REVERSE* with the preset fps (e.g. 12 fps).

Asy
RUNNING
Asynchronity.
Camera *RUNS* at another fps than the preset rate.

((Bat))
NOT READY
RUNNING
Battery low.
The power source does not supply the requested voltage.
If the camera cannot reach the preset fps rate, **Bat** and the current fps rate will alternatively light up on the display.
See more – chapter 10, page 363.

((Bukl))
NOT READY
Buckle trip.
At least one of the buckle trip switches has been tripped.

(CAL)
STANDBY
RUNNING
Lens calibration in progress
CAL alternates with **FPS** or further warning message.
CAL alternates with **FPS** or further warning message.

CCB
STANDBY
Camera Control Box.
The ARRIMOTION CCB controls the camera.

–CCB
STANDBY
Camera Control Box.
The ARRIMOTION CCB controls the camera for shooting *REVERSE*.

(Covr) Dual Port Adapter Cover is missing. While a magazine is mounted on the Dual Port Adapter, the remaining adapter opening is not light tight because the Dual Port Adapter special Aluminium Cover is missing.

STANDBY **ATTENTION:** camera remains in Standby even if the Dual Port Adapter Cover is missing! **Covr** alternates with **FPS** or further warning messages.

RUNNING **ATTENTION:** camera can *RUN* even when the Dual Port Adapter Cover is missing! **Covr** alternates with **FPS** or further warning messages.

((DC)) Dust check.

NOT READY The DUST CHECK or PHASE button has been pushed while the camera is *STAND BY*.

(Door) Lite Magazine to Studio Camera Adapter door is not closed.

STANDBY Camera remains in Standby. **Door** alternates with **FPS** or further warning messages.

RUNNING Camera continues to *RUN*. **Door** alternates with **FPS** or further warning messages.

End Film end warning.

STANDBY Less than 6 m/20 ft unexposed film remain in the magazine. **End** will alternate with **0.0** .

RUNNING Less than 6 m/20 ft unexposed film remain in the magazine. **End** will alternate with actual fps e.g.: **24.0**.

Fixd No manual phase.
RUNNING The PHASE button has been pushed while the SPEED CONTROL switch on the SCB is set on SYNC mode and the PHASE switch has been set to FIXED.

((FPS!)) Wrong preset fps.
STAND BY An fps rate below or above the fps range of the camera has been preset.

((!FW!)) Firmware updating.
STANDBY Firmware incompatibility.
NOT READY Camera is not ready to shoot.

((!SW!)) Software updating.
STANDBY Software incompatibility.
NOT READY Camera is *NOT READY*.

((Hbat)) The power supply voltage is too high.
NOT READY Camera is not ready.
RUNNING The camera stops *RUNNING* and all camera components will be shut *OFF*.
REMARK This message will only be displayed on the FPS display on the Camera Control Panel.

Heat Camera Heater is *ON*.
STANDBY The shutter value will alternate with **Heat** to show that the Heater is *ON*.
NOT READY Camera remains in *Standby*.
RUNNING By pushing the RUN button, the camera should start to *RUN*. If not, the camera is not warm enough to ensure correct running. While the camera is *RUN*NING, the Camera Heater turns itself *OFF*.

((Jam)) Guides, jam.
NOT READY At least one sprocket guide is open or a film jam has occurred.

((Mag)) There is a problem with the magazine or magazine adapter.
NOT READY Camera is not ready.

MCB Manual Control Box controls camera.
STANDBY An MCB has control over the camera.

-MCB Manual Control Box controls camera.
STANDBY An MCB has control over the camera and the *REVERSE* shooting mode has been selected on the SCB.

(m/ft) A magazine with a unit of measurement different to its predecessor has been mounted.
STANDBY **m/ft** alternates with **FPS** or further warning messages. Acknowledge by pressing PHASE or change the unit of measurement.

Movm Movement open.
NOT READY The movement block is not in the fully closed position.

((M/S!)) Movement/shutter async.
RUNNING The mirror shutter and the movement have lost synchronization.

((MTmp)) Movement motor has overheated due to overload.
STANDBY The camera goes into **NOT READY** Wait for motor to cool down.

((Out)) Stock out.
NOT READY Shows that no film is left.
RUNNING The camera stops and goes to *NOT READY* the RUN LED will glow red.
REMARK To reset, take the magazine off.

(RAMP) Ramping problem.
NOT READY Alternates with FPS or messages like SCB, WRC, etc.
Check ramp values, at least, one of the settings is out of the possible range.

((Rev!)) *REVERSE RUN* not possible.
STANDBY When REV is selected while an LT Mag. is used, **Rev!** will show the incompatibility.

SCB Speed Control Box controls camera.
STANDBY An SCB has control over the camera.

– SCB Speed Control Box controls camera.
STANDBY An SCB has control over the camera and the *REVERSE* shooting mode has been selected.

((Spd!)) The camera has exceeded its speed limit.
RUNNING The camera stops and goes into **NOT READY**.
Pressing the PHASE button resets the warning.

((SW)) Software incompatibility.
NOT READY Appears simultaneously with **Phse** warning on the SHUTTER display.

(Syn) Synchronization.

STANDBY SCB controls the camera to *RUN FWD* (forward) and the SPEED CONTROL switch is set to SYNC but no valid sync signal is present.

RUNNING Camera changes to *NOT READY*.
ATTENTION: Alternates with actual fps even though the synchronization fails!

(–Syn) Synchronization.

STANDBY SCB controls the camera to *RUN REVERSE* and the SPEED CONTROL switch is set to SYNC but no valid sync signal is present.

RUNNING Camera changes to *NOT READY*.
ATTENTION: Alternates with actual fps even though the synchronization fails!

(TcSy) Synchronization.

STANDBY The In-camera Slate Box is set in SYNC mode but there is no valid input signal present.

RUNNING Camera changes to NOT READY.
ATTENTION: Alternates with actual fps even though the synchronization fails!

REMARK No REV filming is possible when **TcSy** is displayed.

((Time)) The camera has timed out after 350m of continuous running to prevent it running indefinitely.

STANDBY Camera is *NOT READY*. This can be cleared by pressing the PHASE button.

RUNNING The camera stops and goes into NOT READY.

((TkUp))	The take up side of the magazine has no tension.
NOT READY	Camera is *NOT READY*.
RUNNING	The magazine feed side has tension but the take up side *RUNS* free. Most likely the film has not been attached correctly to the take up core. Reload the magazine.
Updt	Software updating.
STANDBY	Software update in progress.
NOT READY	Camera is *NOT READY*.
V 24.6	Camera is *INCHING*.
NOT READY	Camera is *NOT READY*.
RUNNING	While the PHASE button on the Camera Control Panel is pressed down, the camera is *INCHING* and the actual voltage (e.g. 24.6 V dc) is displayed.
V 3.3	In-camera Slate Box power management. The ISB battery voltage (e.g. 3.3 V) will appear while the TEST button on the In-Camera Slate Box is pushed.
(ViSy)	Synchronization.
STANDBY	The Video Assist IVS controls the synchroni zation of the camera but there is no valid input signal present.
RUNNING	Camera changes to NOT READY. **ATTENTION:** Alternates with actual fps even though the synchronization fails!
REMARK	No REV filming is possible when **ViSy** is displayed

Wind Magazine is taking up loose film.

NOT READY Camera is *NOT READY*.

RUNNING Either there is no film in the magazine, the whole exposed film is still in the magazine or, most likely, the film head has come out of the take up core. Reload the magazine.

REMARK If an empty magazine is mounted on the camera, **Wind** appears as soon as the camera is powered – the camera is *NOT READY*. The message will fade out after about 25 sec. with a 120/400 Mag. or about 35 sec. with a 300/1000 Mag.

Notice

Only when **Wind** *fades out, you will be able to start the camera.*

Caution!

Do not turn the camera ON when a loaded magazine is mounted but the film is not threaded. For testing purposes without film, either remove the loaded magazine or mount an empty magazine on the camera.

WRC STANDBY WRC controls the camera. A Wireless Remote Control has control over the camera.

– WRC STANDBY WRC controls the camera. A Wireless Remote Control has control over the camera and the *REVERSE* shooting mode has been selected.

FURTHER MESSAGES ARE ONLY DISPLAYED ON THE EXTENDED CAMERA CONTROL PANELS

FPS DISPLAY/EXTENDED CAMERA CONTROL PANEL ONLY

« CCB »
STANDBY
CCB controls the camera.
No fps adjustment is possible on the Camera Control Panel because ARRIMOTION CCB/Jogbox controls the camera.

« – CCB »
STANDBY
CCB controls the camera.
No *REVERSE* fps adjustment is possible because ARRIMOTION CCB/Jogbox controls the camera.

LOCK
STANDBY
Camera Control Panel is locked.
Press the UNLOCK button to adjust the fps.

« MCB »
STANDBY
MCB controls the camera.
No fps adjustment is possible on the Camera Control Panel because MCB controls the camera.

« – MCB »
STANDBY
MCB controls the camera.
No *REVERSE* fps adjustment is possible because MCB controls the camera.

RUN
RUNNING
Camera is *RUNNING*.
No fps adjustment is possible while the camera is *RUNNING*.

« SCB »
STANDBY
SCB controls the camera.
No fps adjustment is possible on the Panel because SCB controls the camera.

« – SCB »
STANDBY
SCB controls the camera.
No fps adjustment is possible because SCB controls the camera.

«Syn» SCB is in *SYNC* mode.
STANDBY No adjustment of the fps is possible because the Speed Control Box SCB controls the camera to *RUN FORWARD* and the SPEED CONTROL switch is set to SYNC.

«– Syn» SCB is in *SYNC* mode.
STANDBY No adjustment of the fps is possible because the Speed Control Box SCB controls the camera to *RUN REVERSE* and the SPEED CONTROL switch is set to SYNC.

«TcSy» ISB is active and SCB is in *SYNC* mode.
STANDBY No adjustment of the fps is possible because the In-camera Slate Box ISB controls the camera and the SPEED CONTROL switch is set to SYNC.

«ViSy» IVS controls the camera.
STANDBY No adjustment of the fps is possible because Video Assist IVS controls the camera.

«WRC» WRC controls the camera.
STANDBY No fps adjustment is possible on the Camera Control Panel because WRC controls the camera.

«– WRC» WRC controls the camera.
STANDBY No *REVERSE* fps adjustment is possible on the SCB because WRC controls the camera.

LIST OF MESSAGES AND WARNINGS ON THE SHUTTER DISPLAY (Software Version 3.0E)

As long as the camera is *Standby* and the SHUTTER SET button is pushed, the display will show the preset value. While the camera is *RUNNING*, the SHUTTER display will automatically show the actual shutter opening angle.

Beside this, the SHUTTER display is also used to show further information.

ISB0 **RUNNING**	Shutter closed. The In-camera Slate System is *ON*, the camera *RUNS UP* or *DOWN*, and the mirror shutter is set to 0 degrees.
((CCB)) **STANDBY**	CCB controls the camera. No shutter adjustment is possible on the Camera Control Panel because ARRIMOTION CCB controls the camera.
((Err)) **STANDBY** **NOT READY**	Shutter problem. Shutter error. The actual shutter angle does not equal the preset shutter setting. When a shutter error occurs, the camera stops and changes to *NOT READY*.
Lock **STANDBY**	Camera Control Panel is locked. Press UNLOCK button to change the shutter setting.
((MCB)) **STANDBY**	MCB controls the camera. No shutter adjustment is possible on the Camera Control Panel because MCB controls the camera.

((Run)) Camera is *RUNNING*.
RUNNING The shutter adjustment is not possible while the camera is *RUNNING*.

((SCB)) SCB controls the camera.
STANDBY No shutter adjustment is possible on the Camera Control Panel because SCB controls the camera.

(TSB) The Timing Shift Box TSB is operational.
STANDBY Alternates with shutter angle.
RUNNING Alternates with shutter angle.

((WRC)) WRC controls the camera.
STANDBY No shutter adjustment is possible on the Camera Control Panel because WRC controls the camera.

REMARK: The following message will not be displayed on the Extended Camera Control Panel.

(MCB) Shutter selector is pushed while the Manual Control Box MCB switch is set to control the shutter.
STANDBY Alternates with shutter angle.
RUNNING Alternates with shutter angle.

((Phse)) Software incompatibility.
NOT READY Appears simultaneously with the **SW** warning in the FPS display.

REMARK: By pushing one of the PHASE buttons the camera goes in *STAND BY* status.

The cameras' top

On Studio & Lite
EXCHANGEABLE ENGRAVED VIEWFINDER MOUNTING PLATE

The engraved Viewfinder Mounting Plate shows the format the camera has been set to – either STANDARD 35 or SUPER 35 format – see fig. 1/19.

Notice

The adjustment should be done by trained personnel of ARRICAM Maintenance Centres or rental houses. If, for some reason, you have to change the format of the camera, please see the description of the procedure in chapter 11 – Miscellaneous.

When attaching a viewfinder, carefully line up the pins on the base of the viewfinder with the holes on the Viewfinder Mounting Plate. Be sure that both plugs connect easily.

Viewfinder Mounting Plate fig.1/19

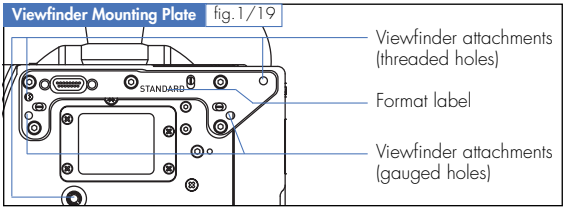

On Studio & Lite
ADJUSTING SCREWS

Caution!

Do not touch the adjusting screws – they must be used by technicians of the ARRICAM Maintenance Centres only!

Studio top fig.1/20

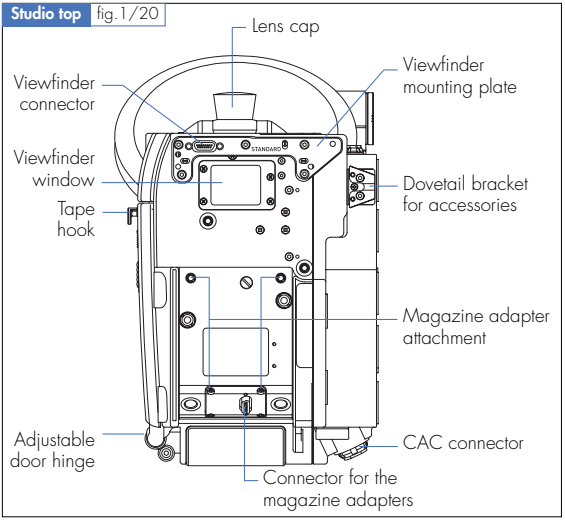

Lite top fig.1/21

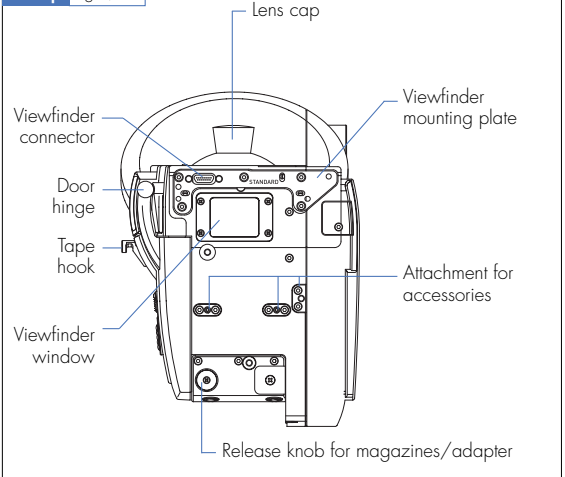

On the Studio only
MAGAZINE ADAPTER ATTACHEMENT

The magazine adapters are fixed to the Studio body by six screws. Firmly screw them into the threaded sockets on the camera top.

Notice

The two screws in the middle of the adapter should be tightened first! (As indicated on the adapter.)

On the Studio only
CONNECTOR FOR THE MAGAZINE ADAPTERS

This connector provides communication between the magazines and the Studio.

On the Lite only
FIXTURE FOR CARRYING HANDLE AND UNIVERSAL LOW MODE SET

Several fixtures are provided for mounting either Carrying Handles or the Universal Low Mode Set or similar support system. For mounting instruction see chapter 9 – Camera Supports.

RELEASE-KNOB FOR MAGAZINE UNLOCKING

To remove a camera opening cover, an Lite Magazine or either of the Lite Magazine Adapters, push the RELEASE knob and, while holding it pressed down, carefully pull the magazine sideways out of the Lite body.

Caution!
Do not touch the adjusting screws!

The camera bodies' bases

When mounting the camera on a head or a Baseplate, be sure that both plates, the gauged holes and the threaded sockets are clean. When using the Power Bridgeplate, slide the cover on the base of the cameraback to allow the supply of power to the contacts provided on the plate.

Caution!
Before fixing the camera, please check that the 3/8" tightening screws will not penetrate the camera base more than 0.27" or 7 mm.

Both camera bases are similar.

Caution!
Any screws not previously described are strictly reserved for Maintenance Technicians only! Do not touch any of these adjusting screws!

Studio base fig.1/22 **Lite base**

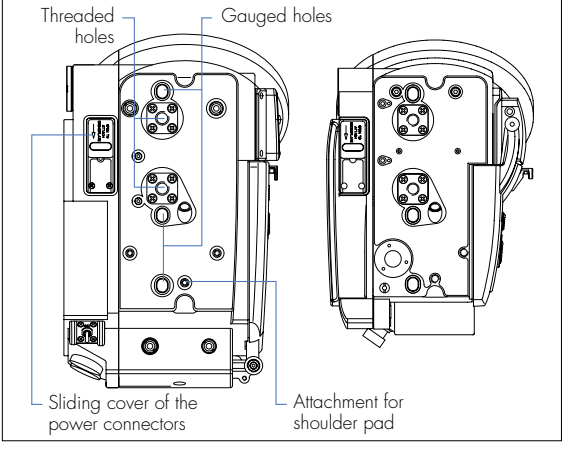

The camera bodies' interiors

Despite the different sizes of the cameras' interiors, both cameras are equipped with similar components.

THE MOVEMENT

Either a 4 or 3 perforation pull-down movement can be installed in both camera bodies by trained Maintenance Technicians. Both movements are fitted with similar operational items. By turning the movement locking lever clockwise, the movement will slide back into the loading position. By turning the lever counter-clockwise, the movement block will slide forwards to the Aperture Plate and finally lock in place.

Caution!

- *Before sliding the movement to the loading position, turn the INCHING knob until the index is in the LOOP position.*
- *In order to secure the movement in its shooting position, push the lever counter-clockwise to overcome a mechanical resistance with a click, which will hold the movement firmly in this front shooting position.*

Movement fig.1/23

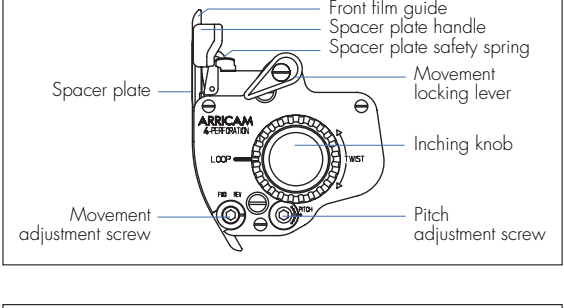

Studio Interior

Lite Interior fig.1/24

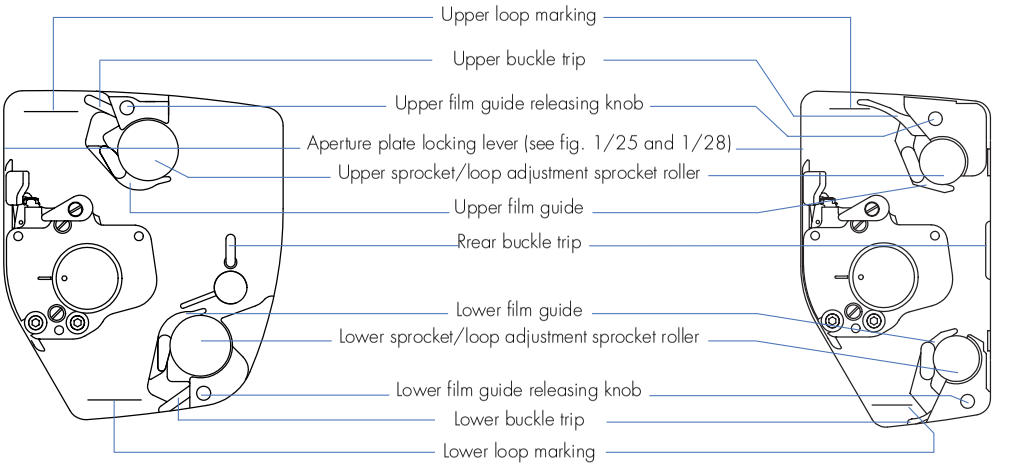

THE PITCH ADJUSTMENT SCREW

In order to adjust the movement to the properties and dimensions of the film material in use, and at the same time achieve the quietest and most gentle film transport, the pitch can be controlled. The PITCH Adjustment screw has marks and buffer stops; the adjusting range is a narrow segment of a screw turn. While the camera is running at the normal frame rate (24 or 25 fps), slowly turn the PITCH Adjustment screw with a 3 mm metric hex wrench back and forth until the noise level reaches its minimum. In this position, the camera *RUNS* smoothly and quitely. This PITCH Adjustment should be repeated whenever the raw stock type is changed.

THE MOVEMENT ADJUSTMENT SCREW (FW/REV)

Because some Black & White films have unusual mechanical properties, it is recommended to set the movement to REV, in order to obtain the optimum steadiness when shooting in *REVERSE* with these materials. To do so, turn the screw with a 3 mm metric hex wrench.

THE INCHING KNOB

The large knurled knob allows manual *INCHING* of the camera. Be aware that turning this INCHING knob will only move the pull-down claws and register pins but not move the shutter. While the camera is powered, the film in the magazine is tensioned automatically. If you want to prevent this, e.g. when threading the camera, first move one of the buckle trips out of its rest position.

THE APERTURE PLATE

These Aperture Plates are made of extremely hard material; the film touches the Plate only in the perforation area. The openings for the registration pins are located left and right of the gate. A side guide rail is attached to the Aperture Plate right side. Clean the Aperture Plate carefully and regularly. Only when it is badly smudged – which will rarely be the case when handled meticulously – you should clean it very carefully with a small brush or a toothpick.

Caution!
Never lubricate the Aperture Plate!

The film gate with the Aperture Format Mask and Filter Holder is integrated in the Aperture Plate. A set with several Aperture Format Masks is available. If it is intended to shoot with open gate, it is recommended to use the Universal Aperture Format Mask in order to avoid the risk of image overlapping and flare.

Aperture Plate fig.1/25

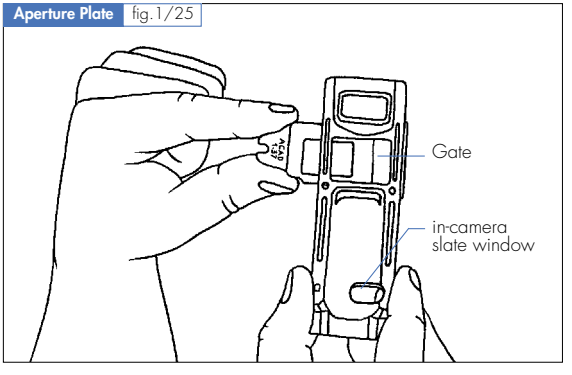

UNIVERSAL (open gate)
1 : 1.33 Full aperture (ANSI)
1 : 1.375 Academy
1 : 1.66
1 : 1.85
1 : 2.35
S35 / 1 : 1.78
S35 / 1 : 1.85 (ANSI)
S35 / 1 : 1.85 (Asymmetric)
S35 / 1 : 2.35 (ANSI)

MOUNTING AND REMOVING THE APERTURE PLATE

In order to check the gate, to exchange a Aperture Format Mask or a filter, the Aperture Plate must be removed from the camera body.

To extract the Aperture Plate:

1. turn the camera MAIN switch *OFF*
2. turn the INCHING knob until its marking matches the LOOP index
3. swing the movement locking lever clockwise until the movement reaches its rear position
4. lift the Aperture Plate locking lever while holding the black handle of the Aperture Format Mask in order to avoid that the Aperture Plate hits the movement block
5. take hold of the Aperture Plate by the Aperture Format Mask handle, lift it and extract the Aperture Plate.



Caution!

- *The surfaces where the Aperture Plate meets the camera body must be meticulously clean – any dirt might alter the flange focal distance.*
- *In case the Aperture Plate is slanting, start inserting again.*

Studio Interior fig.1/26

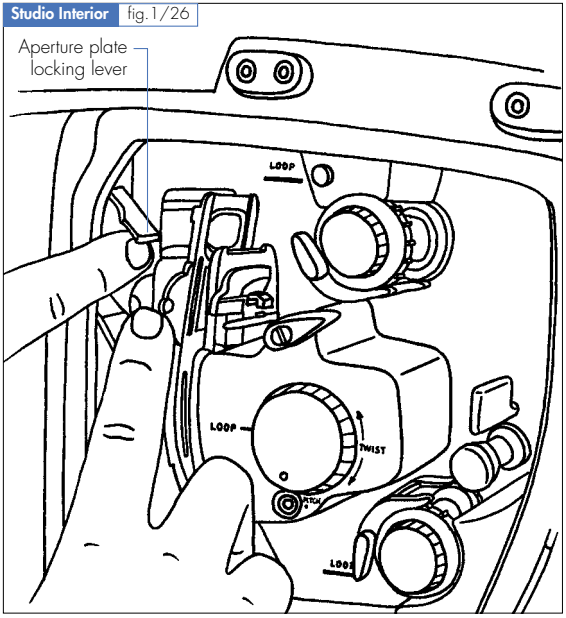

To insert the Aperture Plate:
While holding the Aperture Format Mask handle, insert the Aperture Plate on the mouting rail. Gently press it forward while lifting the spring loaded Aperture Plate locking lever. As soon as it is in place, bring the lever back to its resting position (=lock) again. You can only insert the Aperture Plate parallel to the shaft!

Notice

For mounting, the Aperture Plate has a V-shaped notch at its bottom edge. This notch must be absolutely clean to make sure the Aperture Plate can be seated properly.

Studio Interior fig.1/27

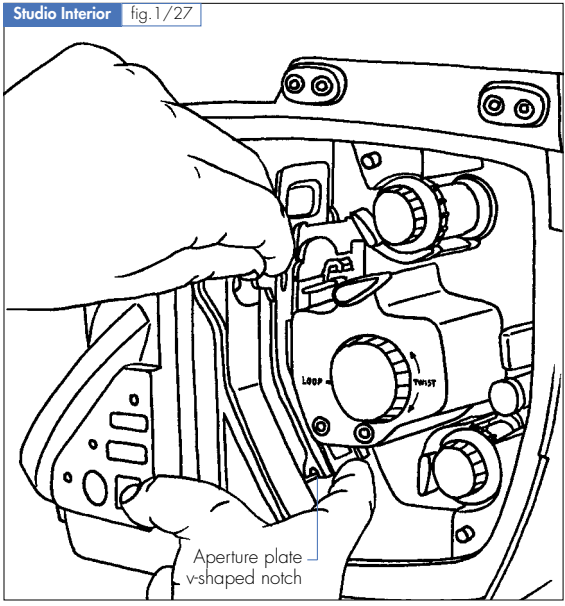

Caution!

When inserting the Aperture Plate in the camera, be sure that the locking lever completely returns fully. The correct resting position is flush with the Plate.

THE APERTURE FORMAT MASKS AND FILTER HOLDER

Caution!

- *An Aperture Format Mask and a Filter Holder must always be inserted in the Aperture Plate.*
- *The Aperture Plate can only be locked if the Filter Holder and the Aperture Format Mask are correctly inserted.*

To remove a Aperture Format Mask or a Filter Holder:

1. remove the Aperture Plate from the camera body
2. pull the Filter Holder sideways out of the Aperture Plate
3. press the Aperture Format Mask lightly on its side flap towards the film gate and then pull it out sideways

To insert a Aperture Format Mask or a Filter Holder:

1. check that the Aperture Plate and the contact surface are absolutely clean
2. push the new Aperture Format Mask sideways into the Aperture Plate
3. check that the film gate is perfectly clean
4. insert (or preferably not) a gelatine filter into the Holder and cut it appropriately
5. check meticulously if the filter is free of imperfection, dust, dirt, fingerprint, etc.
6. push the Filter Holder behind the Aperture Format Mask into the Aperture Plate
7. insert the Aperture Plate into the camera body.

Aperture Plate fig.1/28

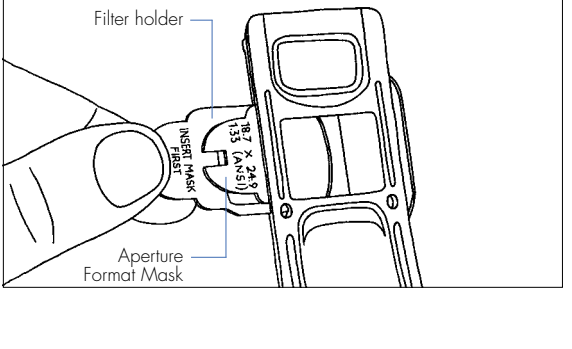

Notice

- *Sliding the movement block forwards when the Aperture Plate is not correctly in place can cause damage to the camera!*
- *The presence of a filter in the film gate will be shown on the Lens Data Display and on the System Line on the video monitor.*



Caution!

- *Be careful not to damage Aperture Plate or gate – this might have serious consequences!*
- *Unless absolutely necessary, avoid placing a gelatine filter in the film gate. Even a microscopic air bubble or speck of dirt will be seen extremely enlarged on the screen.*
- *If there is no other alternative and you have to use a filter in the gate, do not forget to clearly mark the type of filter inserted in the camera.*

THE IN-CAMERA SLATE WINDOW

The Aperture Plate has two slots for the pull-down claws and a round window that allows the exposing of the In-camera Slate on the film. The slots as well as the surface of the Aperture Plate and the little window must always be clean – check regularly.

THE SPACER PLATE

In the centre of the front film guide, there is an opening for the Spacer Plate. This Plate – held firmly in place by magnets – has raised surfaces that hold the film in the gate plane. Smudged surfaces may cause film scratches!

To clean the Spacer Plate, it must be removed first

1. slide the movement to its rear position.
2. press the safety spring fixture downwards, at the same time press the Spacer Plate backwards by its handle.
3. remove the Spacer Plate by pulling it upwards
4. check Spacer Plate thoroughly and – if necessary – clean it with lint-free cloth or a toothpick. Also clean the rear of the Spacer Plate.

Caution!

While manipulating the Spacer Plate, great care must be taken not to touch the Aperture Plate and the gate with the Spacer Plate. If you take the Spacer Plate out of the camera, it is paramount to slide the movement to its rear position before removing or inserting the Plate.

To install the Spacer Plate

1. take hold of the Spacer Plate by its handle and insert it at an angle from above into the movement block.
2. push the Spacer Plate downwards until it locks audibly in place.

Spacer Plate fig.1/29

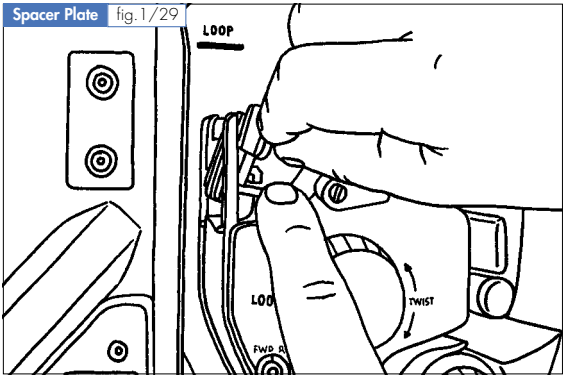



THE MAGAZINES AND MAGAZINE ADAPTERS

The Four ARRICAM Magazines

Convention: In the following description, the cover is considered being the magazine front. So a mounted magazine will have the latches on the camera left side.

All ARRICAM Magazines are built to ensure the smoothest and quietest operation possible. Therefore high-end electronics and mechanical components have been assembled in rugged but lightweight shells. Due to the characteristics of the material used and the special treatment of the surfaces, temperatures up to 40° C/ 104° F will not affect proper operation of the ARRICAM Equipment. If the ambient temperature drops below -10° C/-14° F, thermostatically controlled heaters will automatically ensure an adequate temperature in the cameras and the Studio Magazines. In case of heavy frost, a Heated Barney will help. Motors, heater and digital footage counter are located at the rear of the magazines.

The roller assemblies contain three or four rollers. Roller bearings should be serviced at an ARRICAM Maintenance Centres only. The roller assembly is best cleaned with a small vacuum cleaner.

The ARRICAM System includes four application specific magazines.

1. Studio Magazine 300/1000 for Studio and Lite
2. Studio Magazine 120/400 for Studio and Lite
3. Lite Shoulder Magazine for Lite and Studio
4. Lite Steadicam Magazine for Lite and Studio

Caution!
No other ARRI or MOVIECAM Magazine can be used with the ARRICAM Cameras.

Studio Magazine 300/1000 fig.2/1

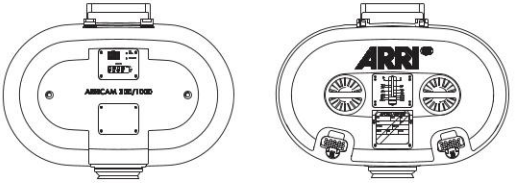

Studio Magazine 120/400 fig.2/2



Lite Shoulder Magazine fig.2/3

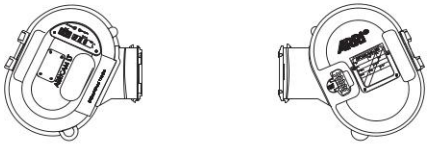

Lite Steadicam Magazine fig.2/4

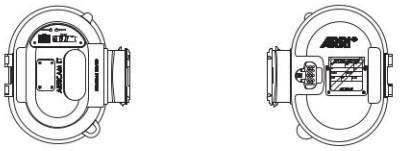

The two main differences between the Studio and Lite Magazines are that only the Studio Magazines allow filming in *REVERSE* mode and they are equipped with heaters.

Both Studio Magazines allow *FORWARD* filming from 1 to 40 fps on the Lite and from 1 to 60 fps with the Studio. With both cameras, the Studio Magazines allow shooting *REVERSE* from 1 to 32 fps.

Notice

- *When using the Studio with a Steadicam, no special magazine is needed because of the orientation of the Back Load Adapter.*
- *To mount Studio Magazines on the Studio, one of the three magazine adapters is necessary – see fig. 2/15 and 2/16 on page 86.*
- *To use Studio Magazines on the Lite, the Studio Mag to Lite Camera Adapter must be used – see fig. 2/28 on page 97.*
- *To use the Lite Magazines on the Studio, the Lite Mag to Studio Camera Adapter must be used – see fig. 2/18 on page 87.*
- *Lite Magazines mount directly on the Lite without any adapters – see fig. 2/28 on page 97.*

Because of the size of the Studio Magazine 300/1000, secure it when the equipment is used in high g-force conditions by mounting the Magazine Stabilization Bracket.

Magazine Stabilization Bracket fig.2/5

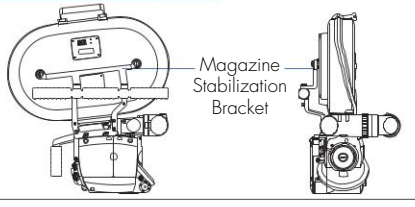

CARE & CLEANING

Magazine Interior

The magazines interior's coating has to be thoroughly clean. Remove any smudges immediately! Clean the interior and film plates from dust carefully with a vacuum cleaner.

Notice

Do not use compressed air because you will risk blowing dust or film particles into inaccessible areas!

A rubber o-ring light trap is in the lid – inspect it regularly for mechanical damage and clean it with a dry cloth – do not use solvents!

Magazine Exterior

Clean magazine painted surfaces and Plexiglas cover with a window cleaner (caution – do not moisten connector!). Keep connector, tightening wheels and footage counter clean and inspect them regularly for mechanical damage. Clean the light trap plate thoroughly before attaching it to the camera. Check the connector and remove possible dust out of the recesses by blowing carefully, e.g. with an aerosol spray (avoid blowing on the roller assembly), or better, with a vacuum cleaner.

MAGAZINE COVER

To open a magazine, lay it down carefully on its rear (digital footage counter side). Push the small safety catch and hold it; then flip up the latch and turn it.
To open a Studio Magazine 120/400 or either of the Lite Magazines, turn the latches counter-clockwise. To open the Studio Magazine 300/1000, turn the left latch counter-clockwise and the right one clockwise.

Studio Magazine 300/1000 Door Latches fig.2/6

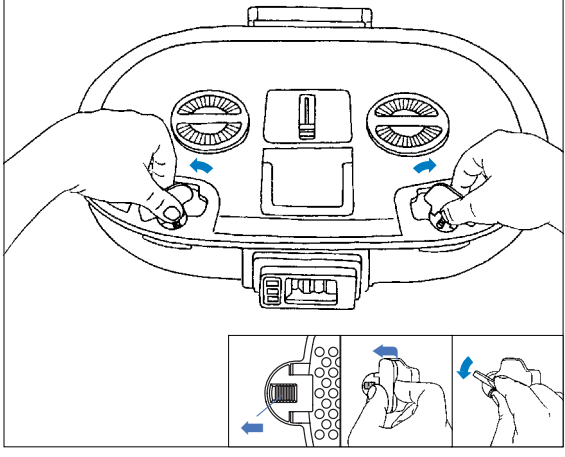

Caution!
When closing the magazine, be sure that nothing gets caught between the door and the magazine's body. Be careful that the safety catch engages properly in the latch, both parts must fit flush together when the magazine is closed.

COREHOLDER

By pressing the release knob on top of the coreholder, the three core locks move inwards. Now slide a plastic film core on the coreholder until it reaches the film plate and you hear a first "click". Hold the coreholder (without pressing the release knob) and – simultaneously – rotate the core gently to the left or right until you hear a second "click". Only now the core is properly seated.

If you do not hear the "clicks", the coreholder pin has engaged in the slit of the core already at the beginning. If it is not properly seated – have another try.
Locked cores are released by pressing the release knob on the coreholder.

Caution!
In case of a malfunction of a coreholder, do not disassemble it – the magazine should be serviced at an ARRICAM Maintenance Centre only.

Coreholder fig.2/7

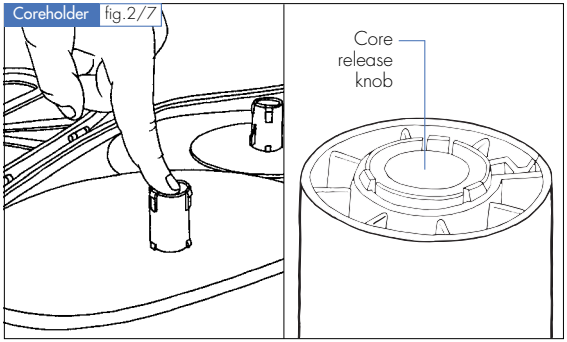

DIGITAL FOOTAGE COUNTER

All four ARRICAM Magazines are equipped with a digital footage counter. Being powered by its own on-board buffer battery, the memory of the counter will display the remaining footage, regardless if the magazine is mounted to a camera or not. When a magazine is attached to a powered camera, the magazine's buffer battery recharges automatically.

In case nothing is displayed (which can happen if the magazine has been left unused for a long time), simply mount the magazine to a powered camera to reactivate the display. The magazine battery usually recharges automatically during the shooting period. There are also Studio and Lite Magazine Charge Cables available to charge the counter batteries without the need for a camera body.

Studio Magazine Footage Counter fig.2/8

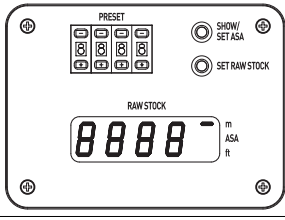

Lite Magazine Footage Counter fig.2/9

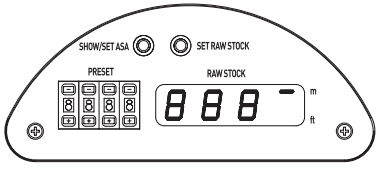

To set the RAW STOCK display, first use the preset selector switches to indicate the amount of filmstock loaded. Then push the button marked SET RAW STOCK for 2 seconds until the footage counter stores the input figure.

When the camera is *RUNNING*, the footage counter counts down (e.g. from 0305 m to 0000 m). The display on the magazine will always show the remaining footage. If the camera is set to REVERSE the counter will count back up.

SETTING THE UNIT OF MEASUREMENT

Remaining film length is displayed in either feet or meters – a mark next to the counter figure indicates the option selected. In order to change the unit of measurement, depress the SET RAW STOCK and the SHOW/SET ASA buttons simultaneously for about 3 seconds. This can be done either while the magazine is not mounted or when the magazine is mounted but the camera is not powered. The displayed unit (m or ft) will affect all film length displays on the camera. If the unit of measurement on a new magazine is different to the previous magazine, then the camera will display a warning that can be reset by pressing the PHASE button.

SETTING ASA FOR IN-CAMERA SLATE EXPOSURE

In order to achieve the best readability of the In-camera Slate information, all ARRICAM Magazines allow the setting of the film speed to control the exposure of the markings. By pushing the button marked SHOW/SET ASA next to the footage counter display with a toothpick, the cursor will move on the display, from m or ft to ASA, and the set sensitivity will appear for about 3 sec.

By using the push wheel switches, the desired sensitivity can be preset and by pushing the SET ASA button for 2 seconds it will be fed into the system.

Notice

- *When feeding the ASA rate of the film in the system, please consider if the film will be processed to its actual sensitivity or if it will be pushed. So e.g. if a 250 ASA film is to be pushed 1 stop, a rate of 500 ASA should be fed in.*
- *Because the displays of the Lite Magazines have only four digits, no cursor will appear when selecting the ASA rate.*



Caution!
All four digits must always be used in feeding the rate, so for example 0320.

TIGHTENING WHEELS (STUDIO MAGAZINES ONLY)

As long as power is supplied to the camera, the magazine's incorporated electronically controlled motors will provide a permanent and appropriate film tension. However, it is recommended you tighten the film manually in the magazine by turning the tightening wheels before connecting the camera to the power supply. This will take up any loose film that may have unwound prior to mounting the magazine on the camera.

A tightening wheel for each side is built into the cover of the two Studio Magazines. By depressing the tightening wheel, you may the core via friction plates in the direction of the arrow. The spring which brings the tightening wheel back to its resting position can be checked by depressing it slightly.

Studio Magazine Tightening Wheel fig.2/10

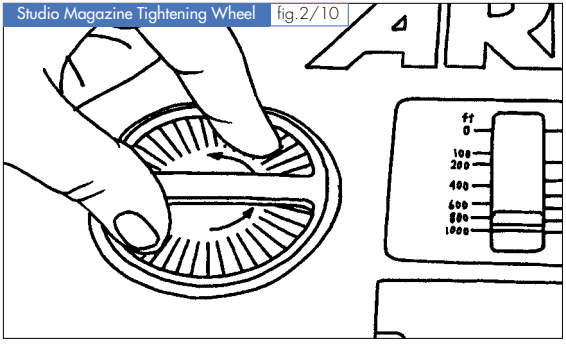

Caution!

Do not press the tightening wheels while the camera is RUNNING!

If a tightening wheel does not pop back into its resting position, the magazine has to be repaired at an ARRICAM Maintenance Centre.

Notice

The fed raw stock – wound emulsion in – winds off left hand spindle clockwise. The film winds onto the right hand spindle clockwise – the emulsion is always facing into the roll.

REMAINING FOOTAGE INDICATOR

As well as the digital footage counter, the Studio Magazine 300/1000 also has a remaining film length indicator. Only when the camera is not *RUNNING*, move the indicator gently towards the upper side of the magazine; the footage indicator lever will swing towards the film roll. The film length remaining in the magazine's left half – usually the unexposed film – is shown on a scale located between the tightening wheels.

Although the footage indicator lever is spring-loaded to return to a neutral position when released, it should be moved back manually. The footage indicator arm should lie flat on the magazine cover interior. Check spring and arm attachment by gently moving them.

Caution!
Due to the length of the footage indicator lever, care should be taken when checking it!

Studio Magazine remaining footage indicator fig.2/11

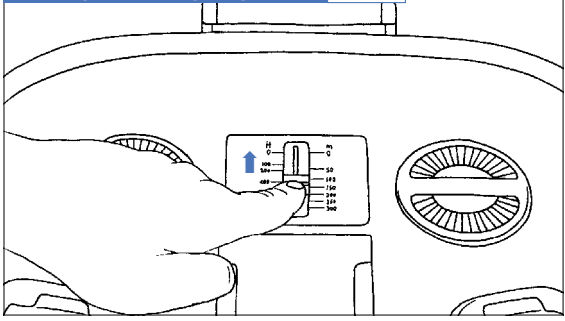

Studio Magazine footage lever fig.2/12

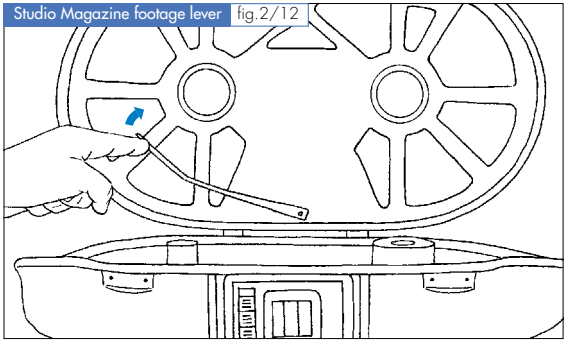

LOOP PROTECTOR

Magazines should always be protected by a clean Loop Protector.
Two different Loop Protectors are provided, one for the Studio Magazines, the other one for the Lite Magazines.

Studio Magazine Loop Protector fig.2/13 Lite Magazine Loop Protector

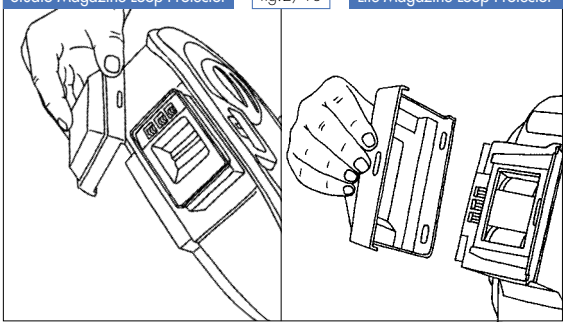

LABEL

Self-adhesive labels, supplied by the ARRICAM Maintenance Centres, can be slid into a holder on the outside of the magazines. Use these labels to identify film during shooting and stick them onto the film cans later.

Label fig.2/14

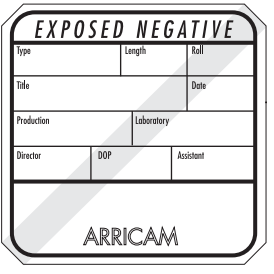

The ARRICAM Magazine Adapters

STUDIO MAGAZINE ADAPTERS

Preliminary remarks

There are two ARRICAM Studio magazines:

- the Studio Magazine 300/1000
- the Studio Magazine 120/400

The only other magazines that can be mounted on the ARRICAM Studio are the ARRICAM Lite magazine by means of a special adapter.

The use of an adapter is always necessary for mounting a magazine on the ARRICAM Studio.

There are four possibilities for mounting magazines on the ARRICAM Studio:

1. Studio magazine horizontally at the top with the Top Load Adapter or the Dual Port Adapter e.g. for operation with geared or fluid head
2. Studio magazine inclined at the rear with the Dual Port Adapter e.g. for shoulder operation or with a geared or fluid head
3. Studio magazine vertically at the rear with the Back Load Adapter e.g. for handheld or Steadicam operation
4. Lite magazine only at the rear with the Lite Mag to Studio Camera Adapter

Studio –Top & Back Load Adapters fig.2/15

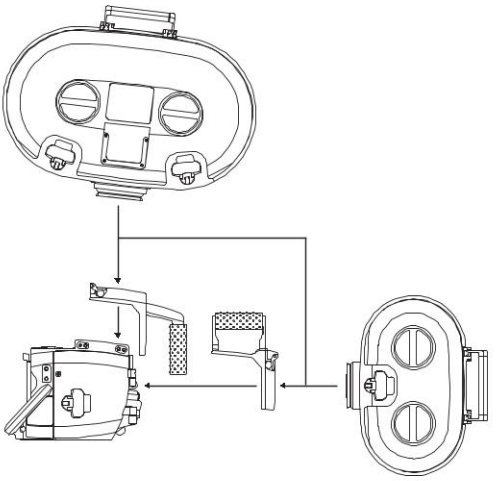

Studio – Dual Port Adapter fig.2/16

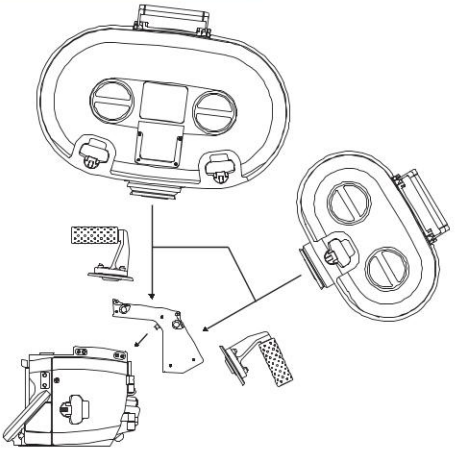

Studio – Magazine Overview fig.2/17

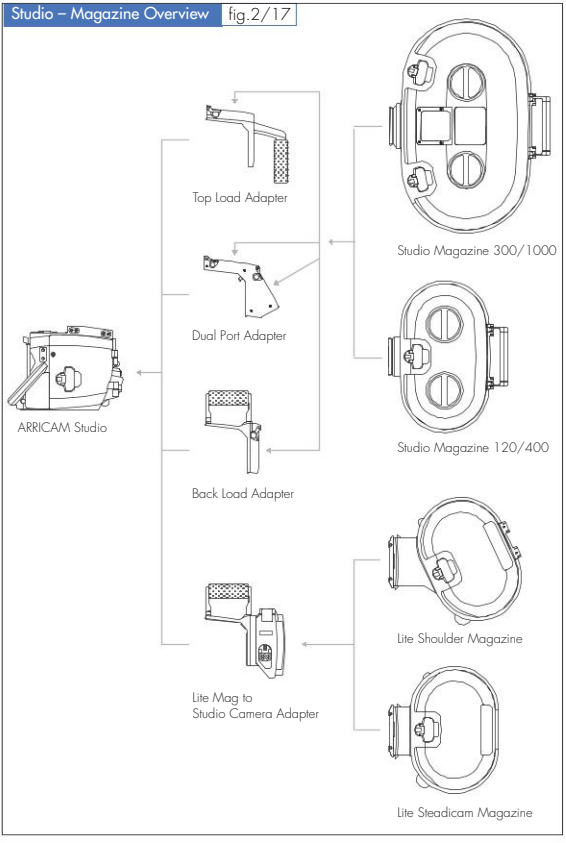

Studio – Lite Mag to Studio Camera Adapter fig.2/18

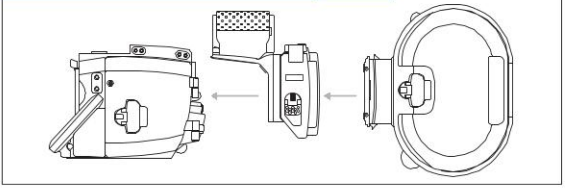

The four adapters are equipped with similar safety locks and connectors for the mounting and electronic linking of the magazines to the camera body

Notice

- *If one of the Lite Viewfinders or the Lite 100% Video Top together with its Lite Video Assist is mounted on the ARRICAM Studio, top mounting of magazine is not possible.*
- *When using the Dual Port Adapter the Lite Video Assist cannot be installed.*

MOUNTING/REMOVING THE ADAPTERS

The four adapters are fastened on the camera body by six 3 mm hex screws: two on top, two on the top-rear edge and two at the lower rear of the camera body opening. Pins on the adapter fit into holes on the camera body and ensure a perfect fit of the adapters on the camera.
After checking that all contact surfaces are absolutely clean, offer the adapter forward towards the camera until the register pins engage.



Caution!
Depress gently on the adapter and ***first*** *tighten both 3 mm hex screws on the top-rear edge (middle) of the adapter.*
Then tighten the four remaining screws. When removing the adapter, also unscrew the middle screws ***first*** *– see fig. 1/8 on page 27.*

Studio –Magazine Adapter mounting fig.2/19

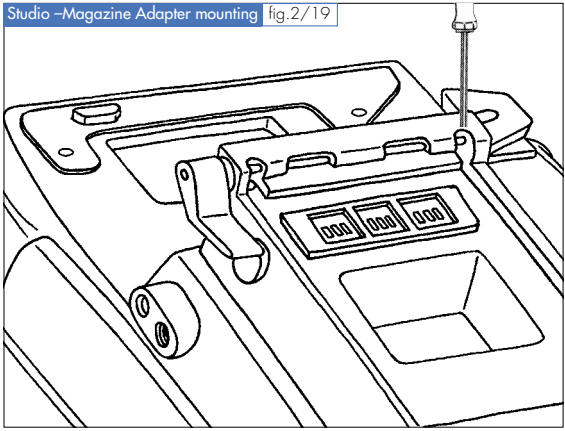

Studio – Dual Port Adapter mounting fig.2/20

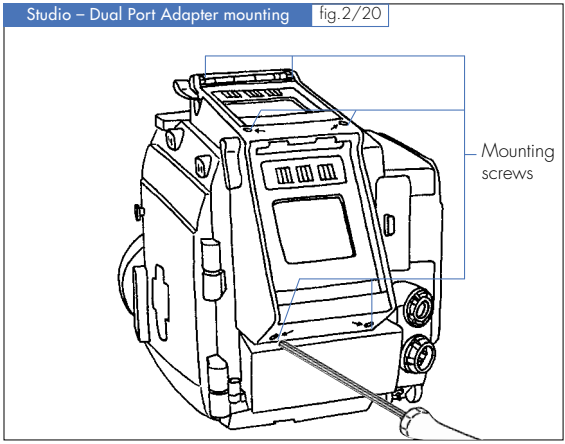

MOUNTING STUDIO MAGAZINES ON ADAPTERS

Position the back part of the magazine's roller assembly on the rear/lower dovetail of the magazine adapter. Pull the film loop with your left hand through the adapter opening into the camera. Push the magazine carefully into the adapter until it engages in the magazine latch.

Caution!

When attaching the magazine, be careful that the film does not get caught between the magazine and the dovetail on the adapter opening! Because the lock mechanism is very quiet, make sure that the magazine is mounted firmly before releasing it. To double check that the magazine is properly seated and locked, briefly pull the magazine away from the camera.

Caution!

To prevent the powered camera automatically pulling the film into the magazine when mounting it, either switch the power OFF or open one of the film guides first – see chapter 3, fig. 3/7.

REMOVING STUDIO MAGAZINES FROM ADAPTERS

Before removing a magazine, be sure that no film is threaded in the movement. To remove the magazine, hold the safety button depressed when moving the release lever clockwise while holding the magazine firmly!

Studio – Top Load Adapter, release button fig.2/21

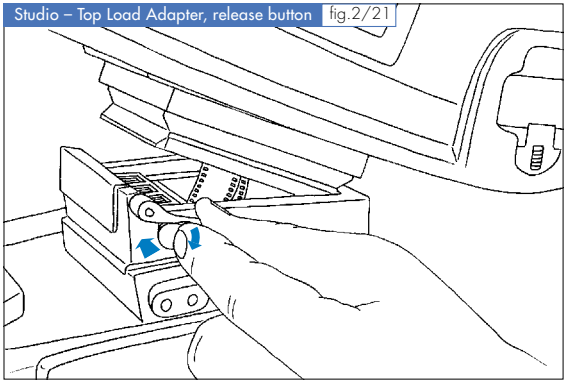

Studio – Back Load Adapter, release button fig.2/22

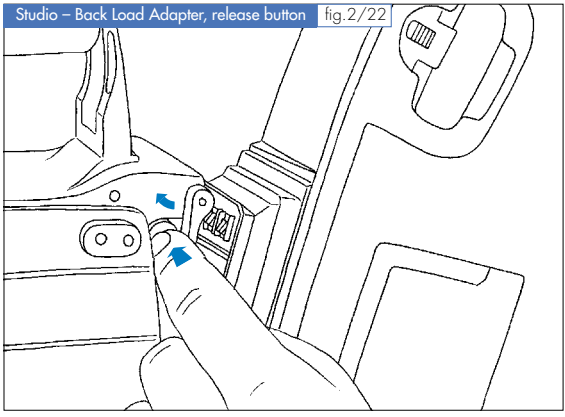

CAMERA COVER CAP

If no magazine is mounted on the camera, you should always fit a Camera Cover Cap to the adapter. The engraving 'ARRICAM' should cover the electrical contacts.

Studio – Back Load Adapter, Camera Cover Cap fig.2/23

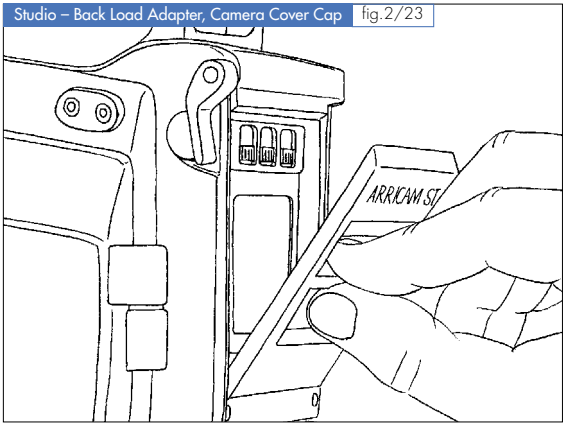

Notice

- *While shooting with the Dual Port Adapter, its Cover Cap, complete with handgrip, obviously must be installed to avoid light entering the camera. In order to be safe, the warning* Covr *will appear on the FPS displays to remind you to cover the cavity.*
- *The Dual Port Adapter Cover Cap with detachable handgrip is not compatible with the one of the other magazine adapters.*

Studio – Dual Port Adapter, Cover Cap and Handgrip fig.2/24

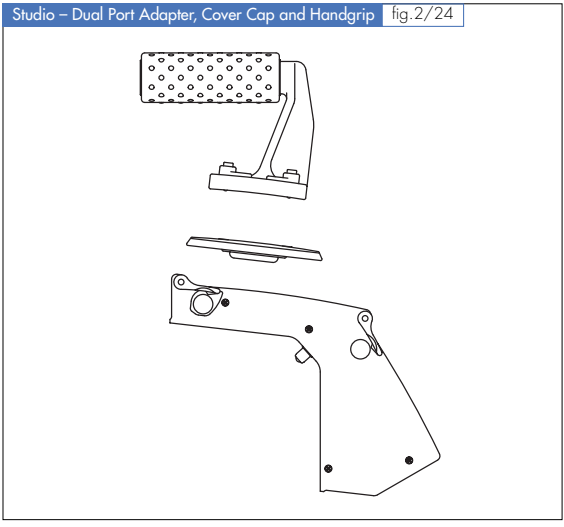

ADAPTERS' CARRYING HANDLES

Each Studio Magazine Adapter is equipped with a handle.

Notice

When using a Lite Viewfinder or the Lite 100% Video Top on the ARRICAM Studio, you must first remove the handgrip from the Back Load Adapter before you can install the Lite Video Assist.

To do so, unscrew the four 3 mm hex screws by using a 3 mm metric hex wrench and remove the Carrying Handle. (The two rear screws are concealed in the uprights of the rear handle riser). Now unscrew the two 3 mm screws out of the bottom part of the previously removed Carrying Handle and fix them in the two threaded sockets on the adapter's front. Do not forget to replace these screws when remounting the Carrying Handle!
To carry the camera in this configuration, replace the removed Handle with the Studio Centre Carrying Handle.



Caution!

On the Dual Port Adapter, the handgrip is part of the removable Cover Cap. Therefore you must be sure that the cover is mounted firmly to the adapter before carrying the camera.

Studio – Back Load Adapter, Handgrip mounting fig.2/25

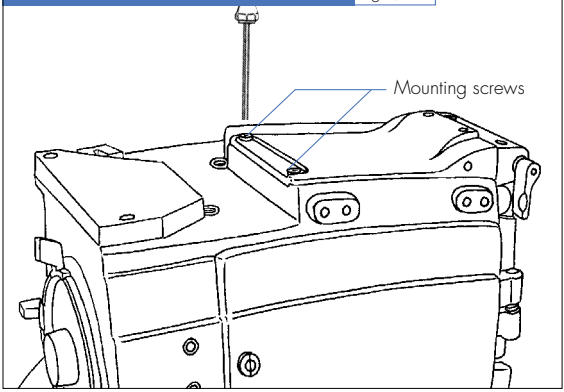

Studio – Back Load Adapter, Handgrip mounting fig.2/26

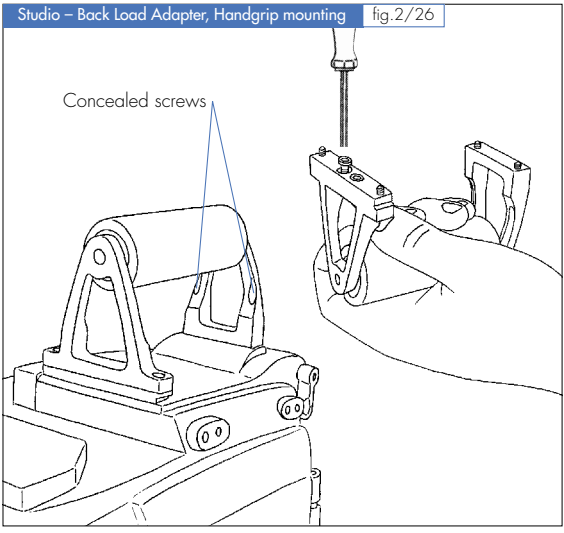

MOUNTING LITE MAGAZINES ON THE ARRICAM LITE

Before being able to install a magazine, the ARRICAM Lite Camera Cover Cap must be removed. Press the Lite Magazine release button and slide the cover out of the camera body. Now carefully slide the Lite Magazine onto the rails until you hear a gentle click. When closing the camera door, the magazine will automatically be held in the correct position.

Lite – Magazine attachment fig.2/27

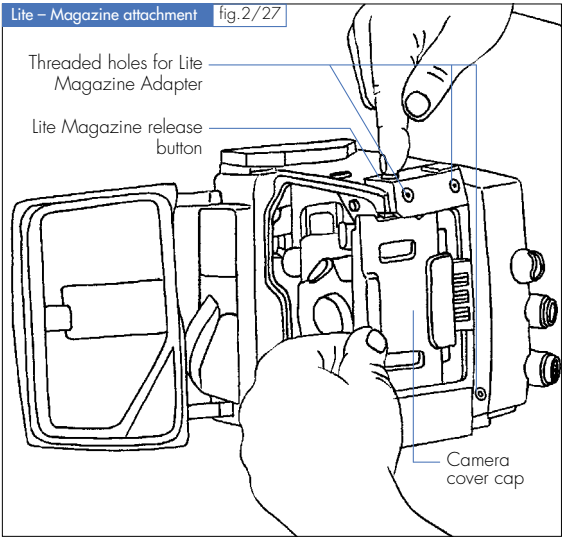

THE STUDIO MAG TO LITE CAMERA ADAPTER

In order to mount the Studio Magazines on the Lite, there is an adapter for the LIte that replicates the receptacle of the ARRICAM Studio Magazine Adapters. The adapter door located at the left side of the Studio Mag to Lite Camera Adapter can be swung towards you to facilitate the threading of the film.

Lite – Studio Mag to Lite Camera Adapter fig.2/28

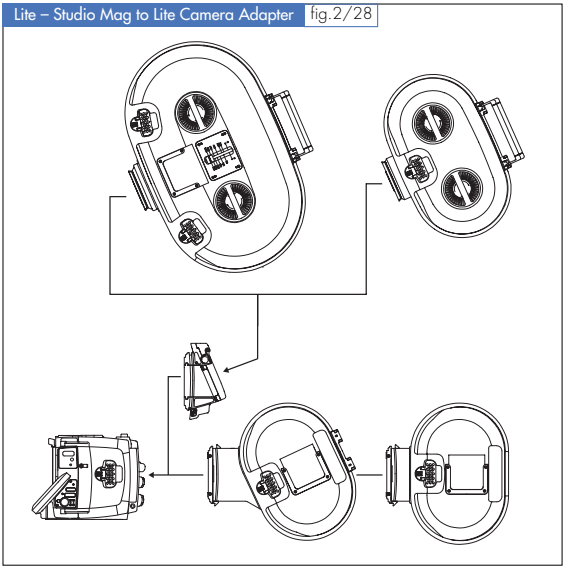

MOUNTING THE STUDIO MAG TO LITE CAMERA ADAPTER ON THE ARRICAM LITE

Instead of a Lite Magazine, the Studio Mag to Lite Camera Adapter can be mounted on the ARRICAM Lite. As soon as the adapter sits tightly in place, secure it by tightening the three hex screws with a 3 mm metric hex wrench.

Lite – Studio Mag to Lite Camera Adapter fig.2/29

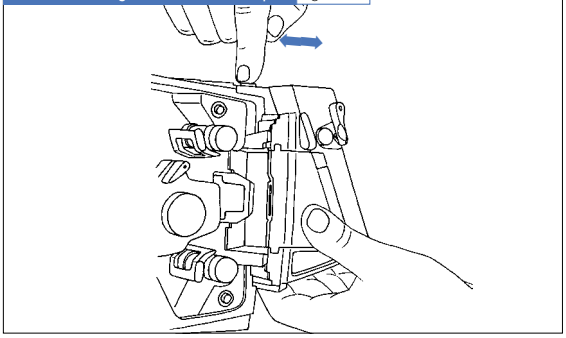

MOUNTING AND REMOVING STUDIO MAGAZINES ON/FROM THE LITE

Because the Studio Mag to Lite Camera Adapter has the same mechanism as the one of the Studio Magazine Adapters, please see previous instructions for that section.

Caution!
Before closing the camera door, be sure that the adapter door is closed first.



LOADING THE MAGAZINES, THREADING THE CAMERAS

Loading The Magazines

Preliminary remark

The Lite Shoulder and Steadicam Magazine are loaded in the same way as the Studio Magazines.
The main differences between the Studio and Lite Magazines are:

- *the magazines' throats (roller assemblies)*
- *that before loading an active displacement type Lite Magazine, you have to move the coreholders to the right in order to be able to feed a120m/400ft roll of film.*

1. Clean darkroom/changing tent.

2. Remove the loop protector.

3. Lift the magazine's cover. Check and clean magazine.

4. Lay the magazine down carefully in the darkroom or changing tent onto footage counter side; roller assembly is facing you.

5. Insert core on the take up side.

Lite Magazine fig.3/1

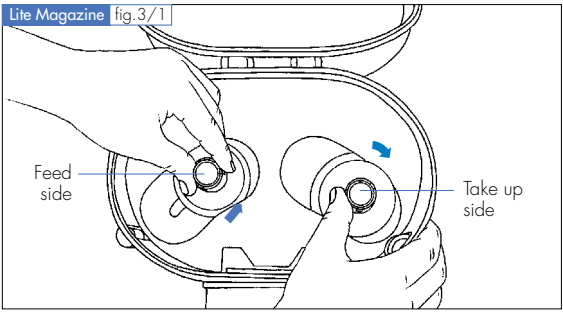

From now on in total darkness!

6. Put film roll on the empty can and place it to the magazine's left side.

7. Wind off just enough film to insert it into the roller assembly to the left of the main roller. Push the film gently into the slot until it emerges from the other side.

Studio Magazine fig.3/2

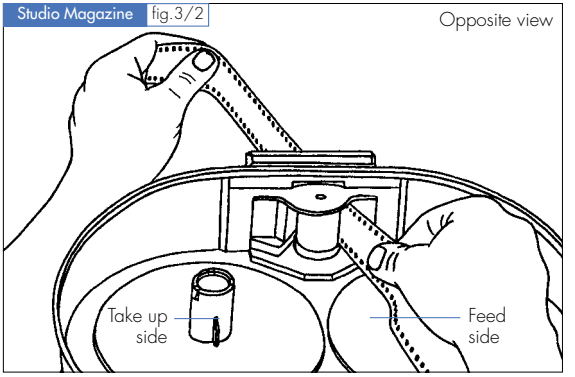

8. Pull approx. 30cm/1ft film towards you.
   Unlock the left coreholder by depressing the core release knob.
   Place film roll onto the coreholder – caution: do not press, film might be scratched! – the roll should slide towards magazine bottom smoothly until you hear a first "click".
   Hold the plate or the coreholder – but without pushing the core release knob and – simultaneously – turn the roll gently clockwise until you hear a second "click". Only now the roll is properly seated. If you don't hear a second "click", lift the roll from the coreholder and repeat the operation.

9. From outside insert film into the roller assembly between central and right roller.

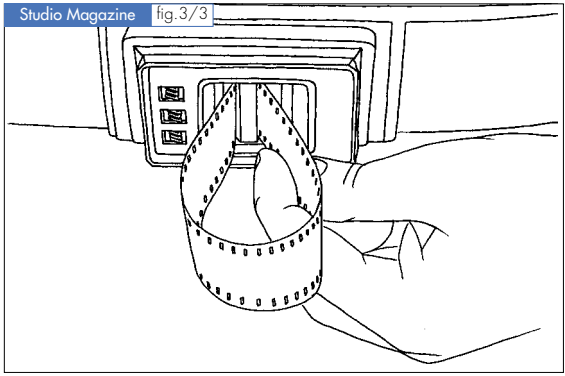

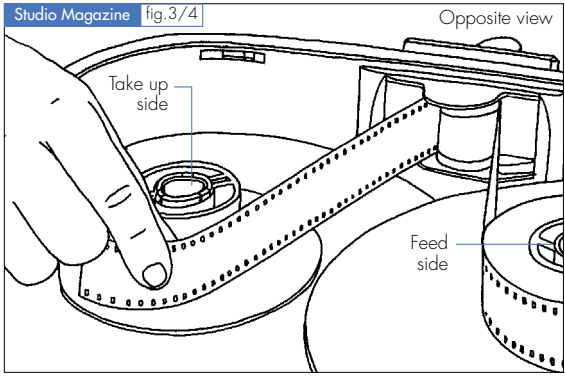

10. Attach to take up core. Feed film into core slot so that no acute angle forms when turning the core clockwise. Wind just enough film around take up core to make sure it will not accidentally slide out again. Wound up film has to be flush with the core and lie flat on take up plate or coreholder disk.

Tighten the two rolls by holding the left one and turning the right one clockwise.

Core – film inserting fig.3/5

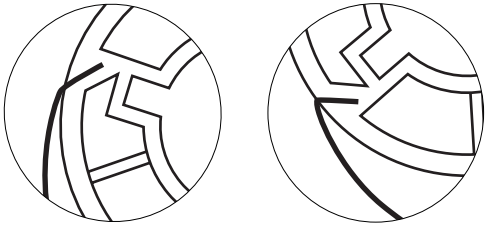

Do not tighten the film too much because it will be scratched!

The film windings on the feed side must not protrude below the plate; film might touch the magazine bottom.

11. Close and latch magazine after checking that film is properly seated and nothing is caught between magazine bottom and cover! Before turning light on or open the changing bag, check that the door is closed properly.

Caution!
When closing the magazine, care should be taken that nothing (e.g. changing tent, film bag, etc.) is caught between magazine cover and magazine base.
Especially with the Studio Magazine 300/1000, closing the lid too forcibly might lead to light leakage! Furthermore, the rubber light seal might

become damaged!
Gently pull at the door to make sure that the magazine is safely closed.

From now on in the light

12. Attach a loop protector.

13. Input length and ASA rate of unexposed film into footage counter – see page 79, fig 2/8 and 2/9 and insert a label into the dedicated holder.

Mounting A Magazine And Threading The Cameras

Preliminary remark

Despite small differences – the release mechanism of the film guides and the buckle switch – both cameras are threaded in the same way.

Caution!

- *Because no tightening wheels are provided on the Lite Magazines, it is imperative to control the adequate winding before shooting. To do so, check the film to ensure the magazine motors provide the correct tension. When RUNNING UP and then DOWN, no free film loop should remain in the chamber.*
- *If a short end remains in an Lite Magazine that has to be removed from the camera, it is recommended to separate the rolls because it will not be possible to tension the film manually before re-mounting the Lite Magazine on the camera again (reloading). By pushing a film loop in the magazine manually, a risk of jam is given.*

1. Open the camera door and remove the Camera Cover Cap.

On the ARRICAM Studio

Remove the cover from the Magazine Adapter.

While pushing the silver magazine release safety button, push down the release lever to remove either the cover or a magazine.

Notice

- *Be sure to put the cover in a safe place in order to find it easily when you will remove the magazine.*
- *When using the Dual Port Adapter, place and secure firmly the special cover on the opening you will not use to mount the magazine.*

On the ARRICAM Lite

Open the camera door.
Push the silver release button down to slide out the Camera Cover Cap.

Lite Magazine fig.3/6

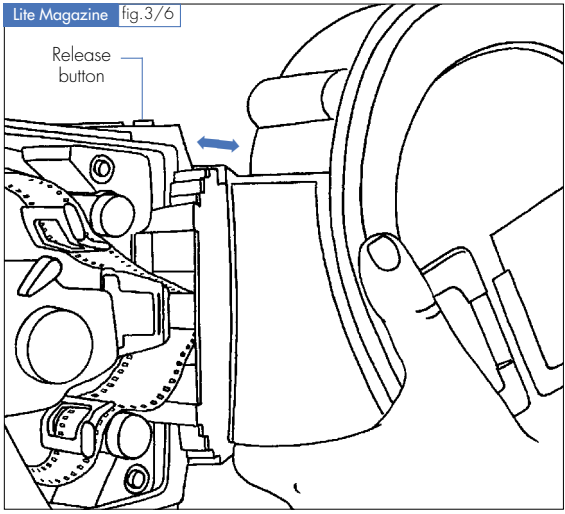

On both cameras

2. Swing away the rear film guides by pushing the upper and lower release buttons.

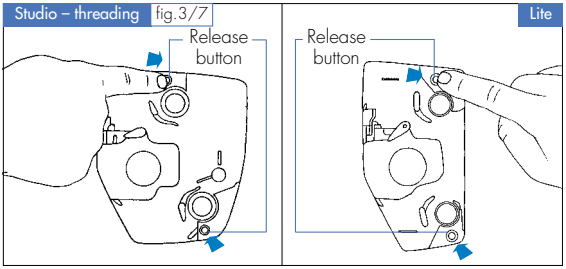

3. Slide the movement to its rear position by rotating the lever clockwise.

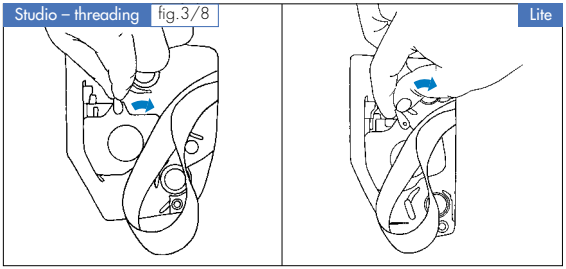

4. Pull some film out of the magazine until the loop is about one hand width long.

Caution!

For the following steps, make sure

- *that the film will not get caught between the magazine and the adapter!*
- *that the magazine is firmly attached to the magazine adapter*

On the ARRICAM with a Studio Magazine Adapter:

5. Carefully place the magazine onto the adapter. Pull some more film out of the magazine feed side and lay the film into the proper path. Swing magazine towards camera body until it engages in the latch. Double check that the magazine is secured firmly.

Studio – threading fig.3/9

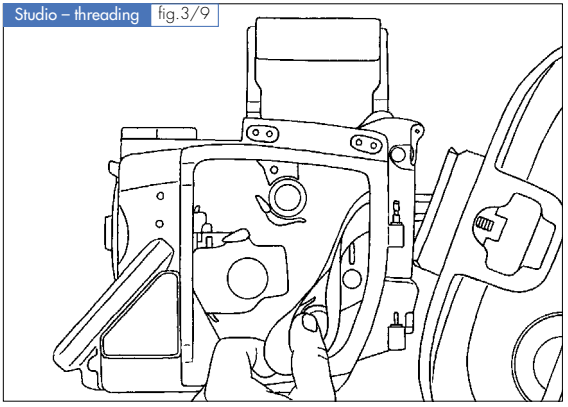

Studio – threading fig.3/10

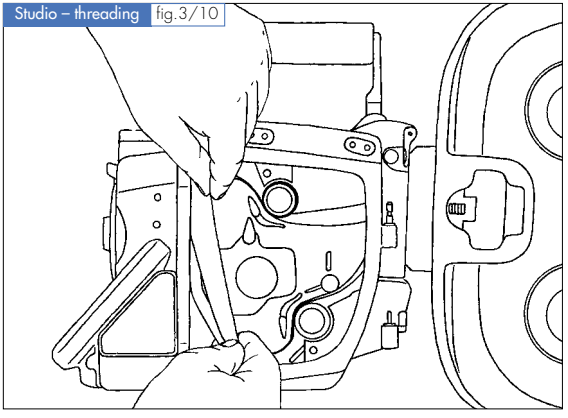

On the ARRICAM Lite:

5. From the side, push the magazine halfway into the dovetail guide on the camera.
   Place the film in the movement so that it lies between the sprocket guides and the sprocket rollers, and between the movement and the film gate.
   Now push the magazine fully into the camera.

On the ARRICAM Lite with Studio Mag to Lite Camera Adapter:

5. Open the adapter door.
   Place the magazine carefully onto the Studio Mag to Lite Camera Adapter.
   Pull some more film out of the magazine feed side and lay the film into the proper path.

Lite – threading Studio Magazine fig.3/11

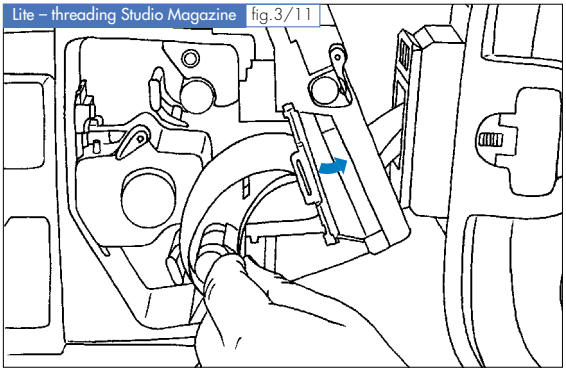

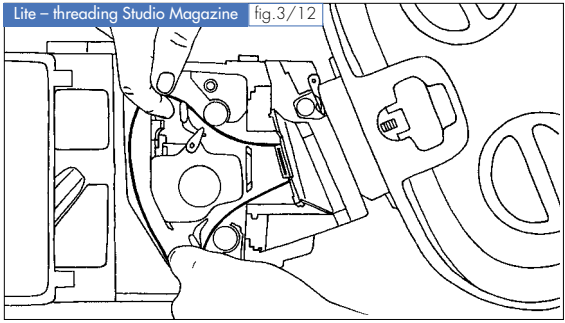

On both cameras

6. Position the film on the lower sprockets so that the teeth engage the film perforations. Close the lower film guide by pushing it towards the sprocket. Repeat for the upper sprocket.

Notice

The sprocket teeth must engage properly in film perforations! If you cannot close a film guide easily, the teeth probably are not engaged in the film perforations properly. Open the film guide and reposition the film. Never force a film guide!

7. Rotate the INCHING knob so the index point is at 12 o'clock.
   Thread film between Aperture Plates and movement block in a generous loop.

8. Turn the movement locking lever with one hand gently counter-clockwise to move the movement block into its front position. At the same time, twist the INCHING knob with the other hand to the left and right (as in the drawing below) to engage the pull-down claws gently and properly in the film perforations. Only then lock the movement block by further turning the lever counter-clockwise until it engages in its front position with a slight click.

Studio – twisting fig.3/13 Lite

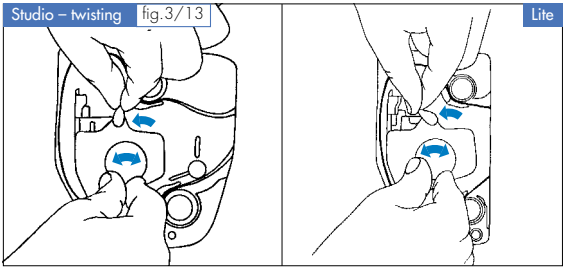

9. To adjust loop length, turn INCHING knob to the position (dot) labelled "LOOP".

Studio – Loop adjustment fig.3/14 Lite

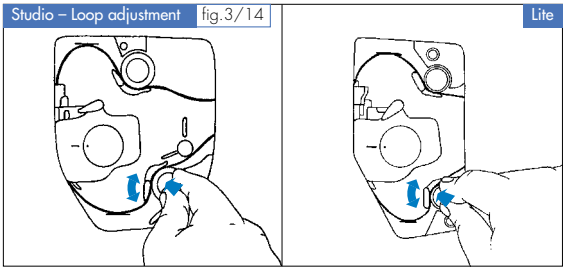

10. Form upper film loop by depressing and turning the sprocket roller. It should follow the "LOOP" mark engraved on the rear of the camera interior.

11. Repeat this procedure with the lower film loop.

On the ARRICAM Studio only

12. Move the buckle switch to its centre position and check film transport by turning the INCHING knob clockwise. Now film should be tensioned by the winders. If not, check that the locking levers and the buckle switches are in the shooting position.

    Then push the PHASE button. The camera will start to *INCH* over at 1 fps which allows you to check the correct threading.

Notice

While the PHASE button is pushed, the actual voltage of the power supply will show up in the FPS displays.

Studio – buckle switch fig.3/15

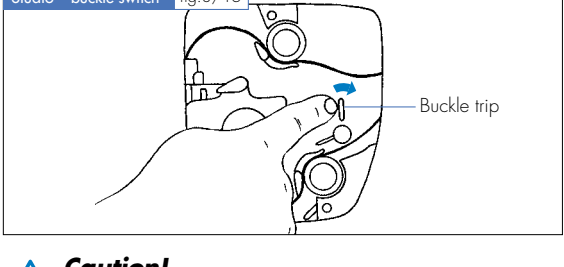

Caution!

As soon as you switch the camera power ON, the magazine motors are activated to tighten the film. To prevent this when mounting a magazine or loading film, just open a film guide by pushing a sprocket guide release button or set the camera MAIN switch to OFF.

RUN the camera briefly at 24 or 25 fps to check for proper threading. With a little practice you will be able to hear if there is any problem by the sound of film *RUNNING* through the camera at 24 or 25 fps.

To improve the noise level with the film stock you will use, turn the PITCH Adjustment screw with a 3 mm metric hex wrench while the camera is *RUNNING* at 24 or 25 fps until you find the quietest position.

When the camera is set to *RUN REVERSE*, the best image steadiness can be achieved by setting the FWD/REV Adjustment screw to REV.

When closing the camera door, care should be taken that the camera interior is clean and the door lock is flush with the door.

Studio – Top Load Adapter fig.3/16

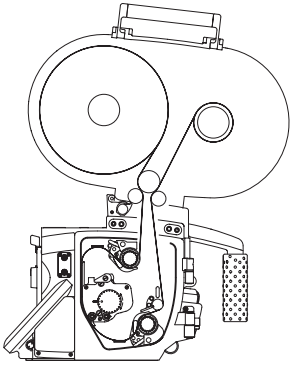

Studio – Back Load Adapter fig.3/17

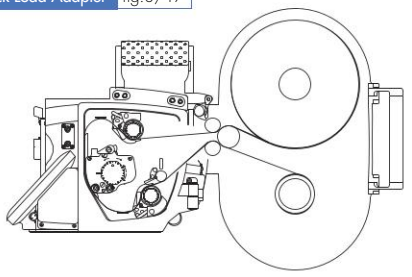

Studio – Dual Port Adapter (rear) fig.3/18

(Will also top mount: see fig 3/16)

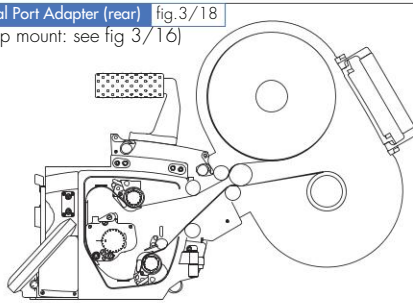

Studio – Lite Mag to Studio Camera Adapter fig.3/19

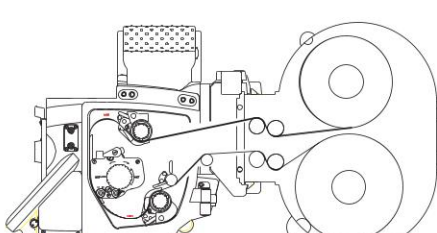

Lite – Shoulder Mag fig.3/20

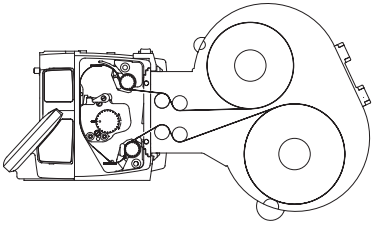

Lite – Steadicam Mag fig.3/21

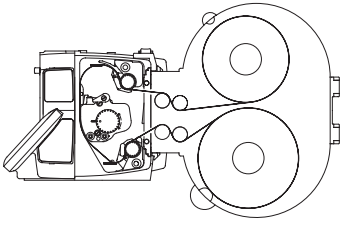

Lite – Studio Mag to Lite Camera Adapter fig.3/22

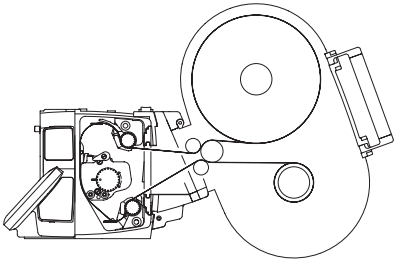



THE ARRICAM OPTICAL VIEWFINDERS

Studio Viewfinder fig.4/1a

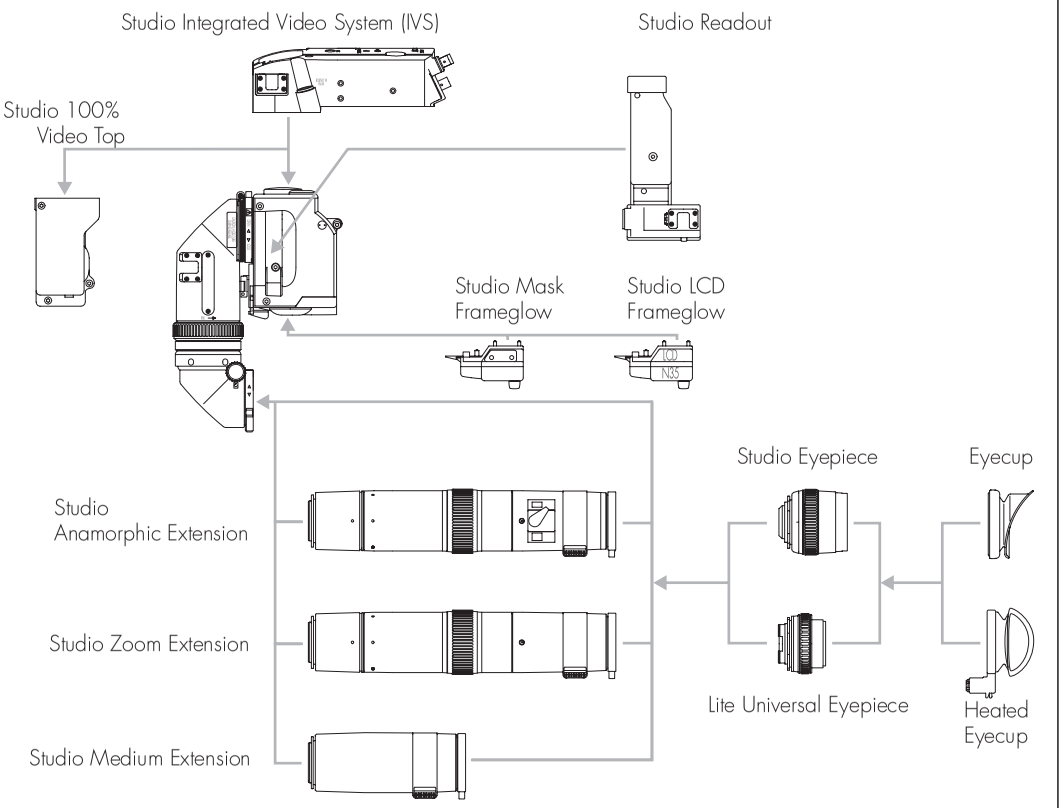

Studio Universal Viewfinder fig.4/1b

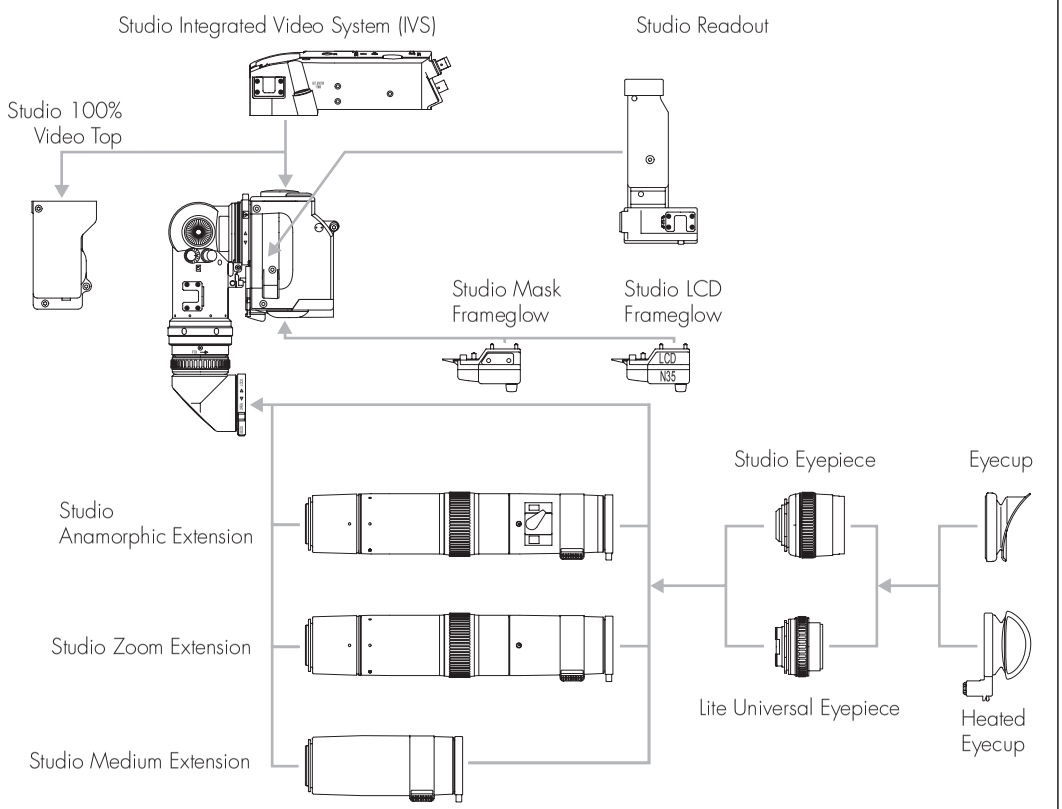

Lite Viewfinder fig.4/1c

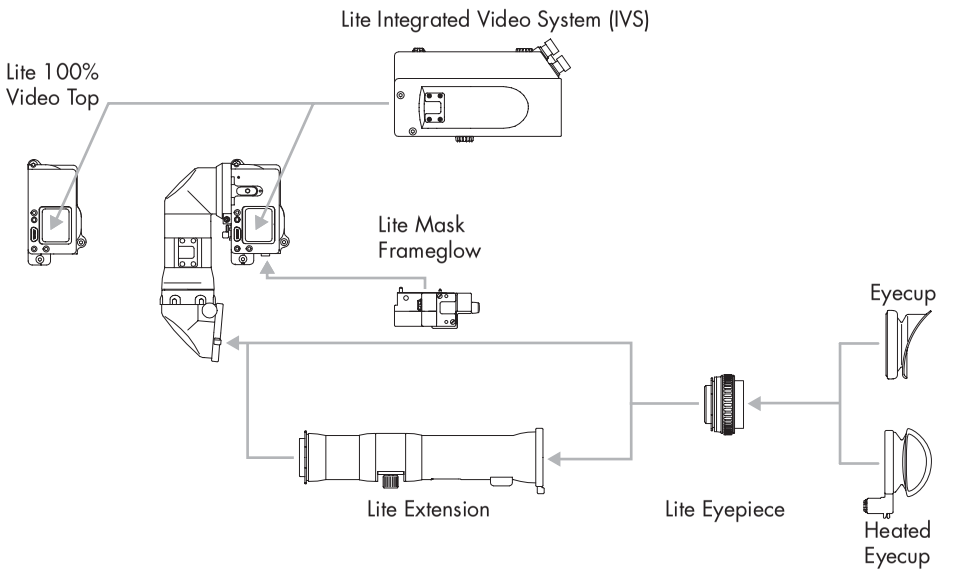

Lite Universal Viewfinder fig.4/1d

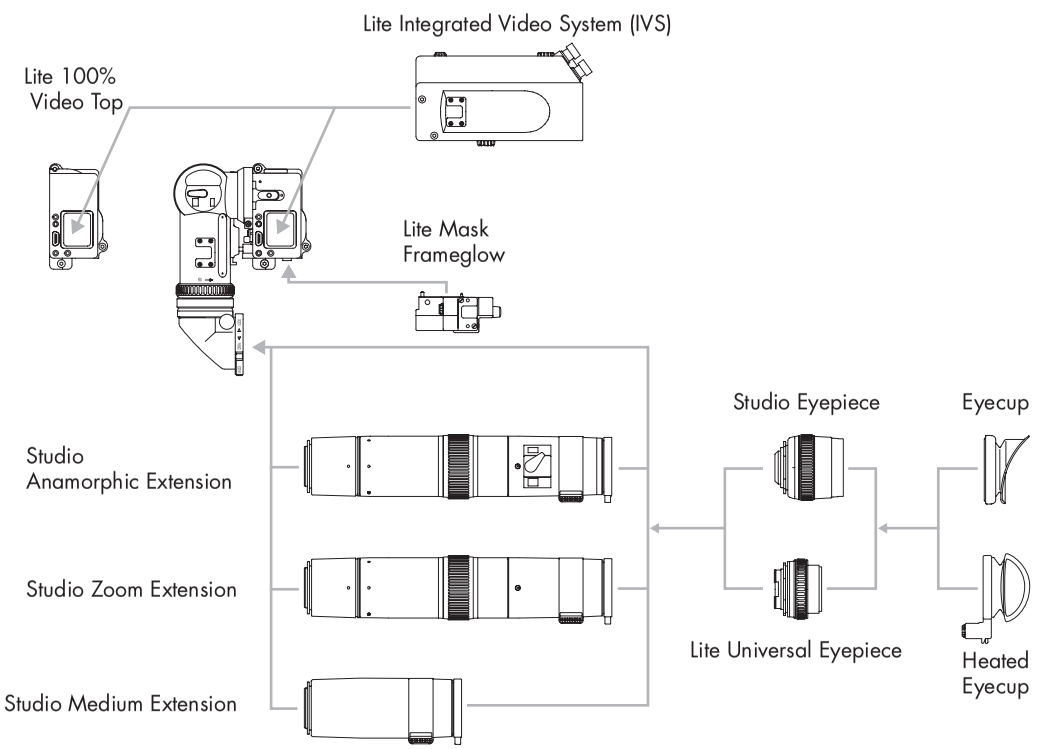

The Optical Viewfinder System Components

INTRODUCTION

ARRI offers a versatile modular ARRICAM Viewfinder System. All Viewfinders are usable without the need of adapters on both cameras, the ARRICAM Studio and the ARRICAM Lite.

THE ARRICAM VIEWFINDERS

The user may choose between four Optical Viewfinders:

The Studio Viewfinders for spherical and anamorphic cinematography.
It offers an exceptional viewing quality favoured by a large optical design. Special care has been taken to avoid the unpleasant vignette effect that could occur by moving the eye. Two types of Studio Viewfinder are available. The attachment of the Arms to the Viewfinder Block makes the difference between the two types.

1. The "Hinge type" has a permanently hinge mounting of the Viewfinder Arm that can be swivelled to both sides of the camera. Even though a Long Zoom Anamorphic Extension Tube with a swing-away desqueezer is attachable on this Viewfinder, it is mainly foreseen for spherical cinematography.

2. The "Bayonet type" has an exchangeable Viewfinder Arm. A mini PL bayonet port allows not only the exchange of the Viewfinder Arm but also its swivelling to both sides of the camera. Two different Arms are provided, the regular Studio Viewfinder Arm for

spherical cinematography and the Universal Studio Viewfinder Arm with an integrated swing-in de-squeezer.

The Lite Viewfinders for spherical and anamorphic cinematography.
Even though the Lite Viewfinders are smaller and lighter than the Studio Viewfinders, they offer versatile possibilities and an excellent viewing quality. Two types of Lite Viewfinders are available.

3. The Lite Viewfinder for spherical cinematography only. It has been specially conceived for handheld operation.

Lite Viewfinder fig.4/2

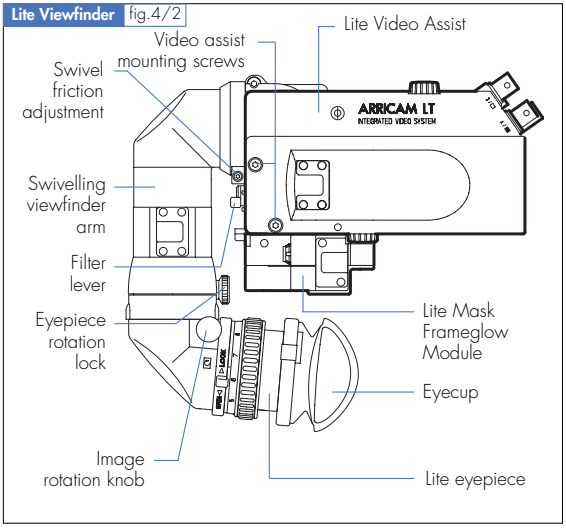

4. The Lite Universal Viewfinder for spherical and anamorphic cinematography. This viewfinder contains a swing-in anamorphic de-squeezer lens.

All four Viewfinders permit the use of an Eyepiece and a Video Assist at the same time. A beam splitter with a ratio of 80% for the Eyepiece and 20% for the Video Assist allows a very bright viewfinder image.

Studio Viewfinder fig.4/3

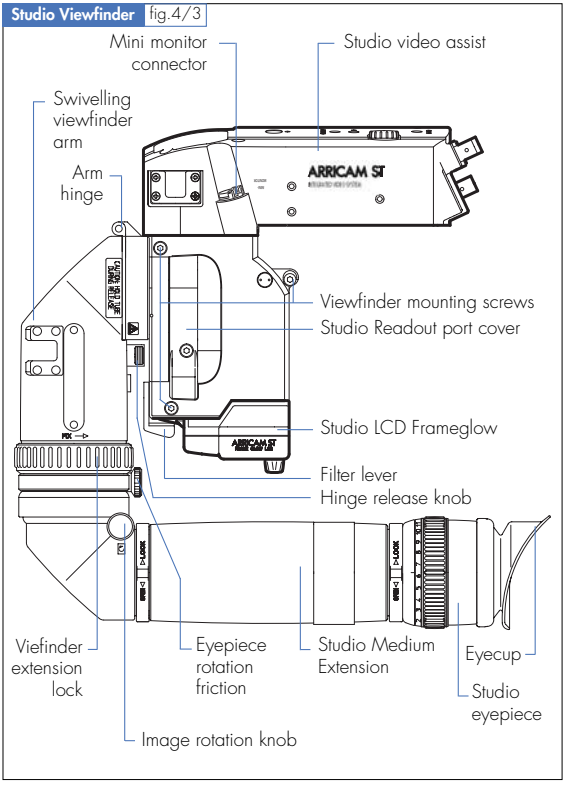

Bottom View

Lite Viewfinder fig.4/4

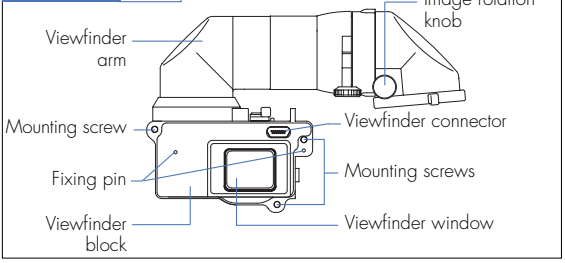

Lite Universal Viewfinder fig.4/5

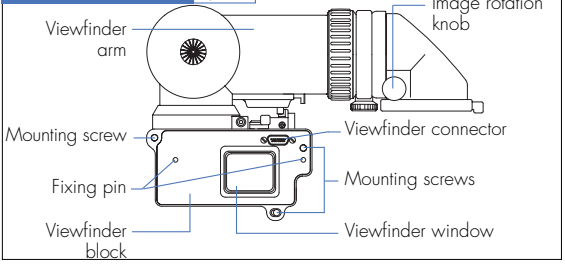

Studio Viewfinder (bayonet) fig.4/6

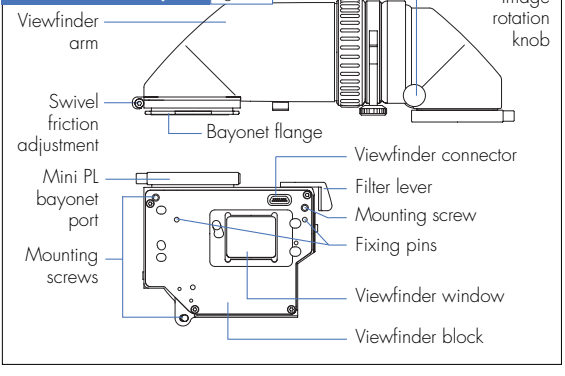

Top View

Lite Viewfinder fig.4/7

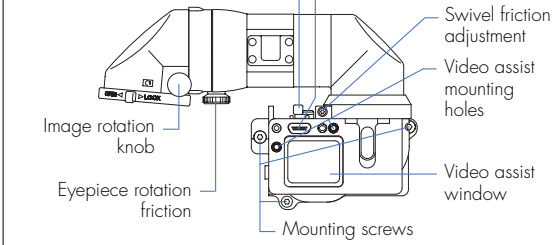

Lite Universal Viewfinder fig.4/8

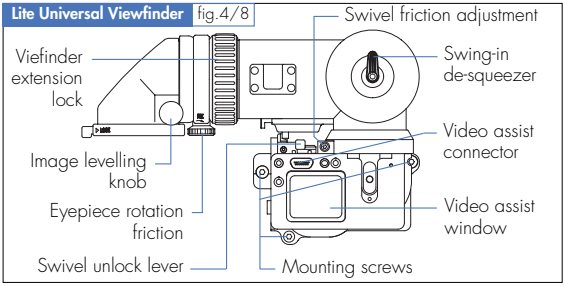

Studio Universal Viewfinder fig.4/9

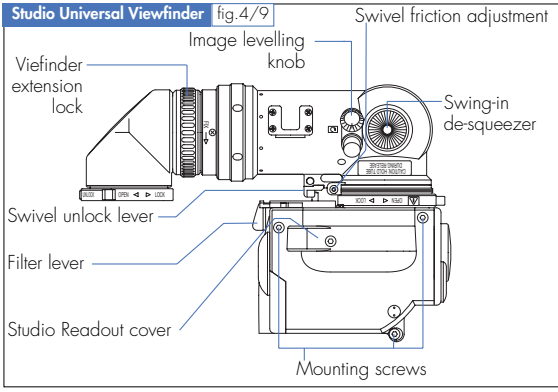

THE ARRICAM 100% VIDEO TOPS

As well as the four Optical Viewfinders, ARRICAM also offers the option of framing pictures by means of a Video Viewfinder. This gives the operator the choice between the possibility of using the optical image as well as the video image or only to use the video image alone. The latter option would be chosen when looking through the Viewfinder is not possible or not desirable – e.g. Steadicam or remote head operation. To work with the "flexibility of a mini-DV camera", the operator can use one of the On Board Monitors instead of looking through an Eyepiece.

When no Optical Viewfinder is needed, the Video Assists can be mounted directly to the ARRICAM Studio or to the ARRICAM Lite by means of the lightweight 100% Video Tops.

Depending on the type of Video Assist used, either the Studio 100% Video Top or the Lite 100% Video Top will be used. Both Video Tops can be mounted on either camera body.

On the base of all Viewfinders and of the two 100% Video Tops, the Viewfinder's window, the connector, the fixing pins and retaining screws are protected by a cover. Unscrew the hex screws with an 3 mm metric hex wrench to remove the cover and mount the Viewfinder or the 100% Video Top to the camera.

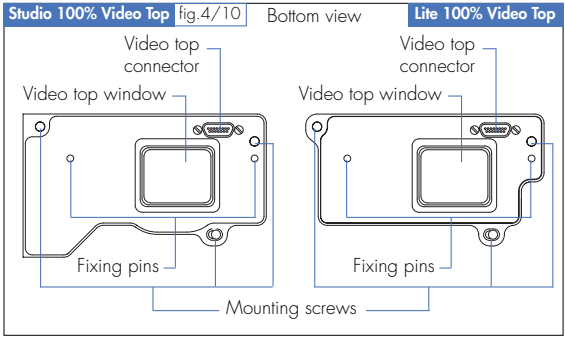

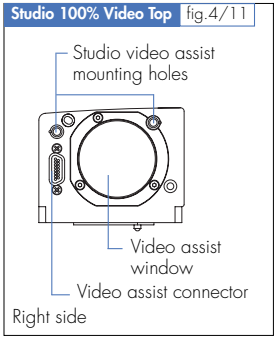

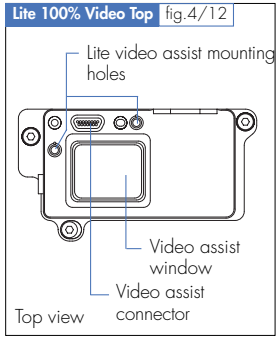

THE ARRICAM VIDEO ASSISTS

ARRI offers two technically similar Video Assists – for description see chapter 5 – to be installed on the appropriate Optical Viewfinder or 100% Video Top.

MOUNTING THE OPTICAL VIEWFINDERS OR THE 100 % VIDEO TOPS

Notice

Because all the components are quite similar, the following description is valid for all four Viewfinders and both 100% Video Tops. Differences between the components are described separately.

After removing the protection cover (fixed with two 3 mm hex screws) and checking that both parts (connectors, glass surfaces) are absolutely free of dust and fingerprints, mount the Viewfinder or 100% Video Top on the camera. The pins must engage easily in the gauged holes. While tightening the three 3 mm hex screws, the connectors will fit together automatically. Therefore be sure that the Viewfinder or 100% Video Top sits securely on the camera.

Because ARRICAM offers the possibility to shoot in STANDARD 35 or in SUPER 35, the Viewfinder must be mounted to fit these formats.

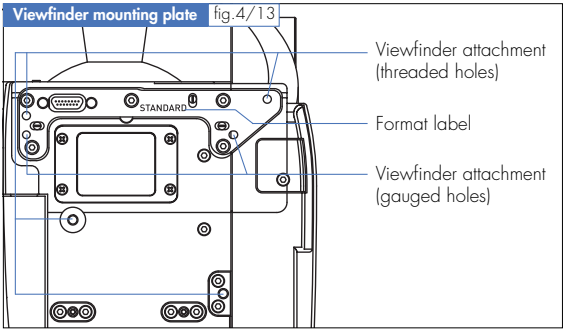

Studio Viewfinder fig.4/14

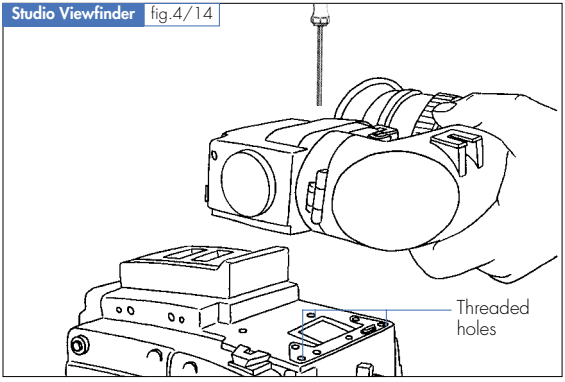

Lite Viewfinder fig.4/15

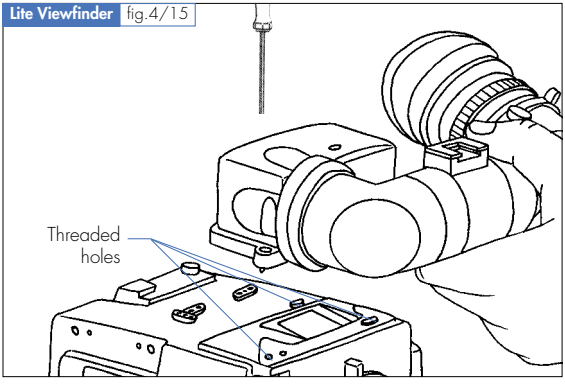

Studio 100% Video fig.4/16

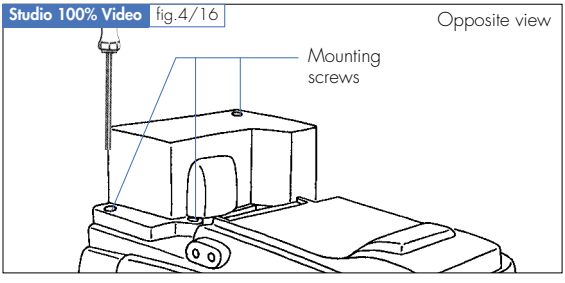

Notice

The change between formats should be carried out in the rental house. In addition to the lens port, the desired Viewfinder Mounting Plate will also be installed. In ARRICAM Maintenance Centre, skilled technicians are not only trained to adapt the ARRICAM to the production needs, but also have all the control instruments to check e.g. the flange focal distance. Nevertheless, if you would like to change the format yourself, please see the instruction in chapter 11 – Miscellaneous. The engraving on the Mounting Plate top shows the format.

THE VIEWFINDER'S HOUSING

The four Viewfinder's housing have similar characteristics.

On the left side of all Viewfinders a Frameglow module attachment is covered by a removable cover plate. Unscrew the hex screws with an 3 mm metric hex wrench to remove the cover plate and to mount the Frameglow module – see fig. 4/43.

Studio Frameglow attachment fig.4/17

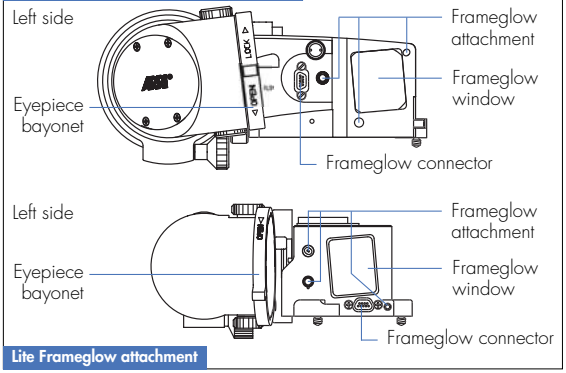

Lite Frameglow attachment

On the right side of the Studio Viewfinders and on the top of all Lite Viewfinders, a Video Assist attachment is covered by a removable cover plate. Unscrew the two hex screws with an 3 mm metric hex wrench to remove the cover plate to mount the corresponding Video Assist – see chapter 5 – Video Assist.

Studio Video Assist attachment fig.4/18

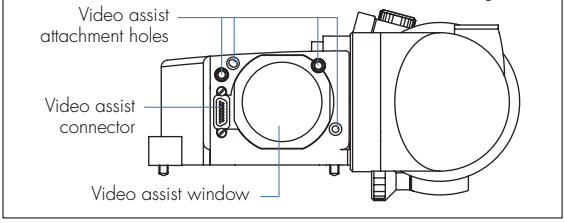

VIEWING FILTER LEVER

On the front of all Viewfinders, a viewing filter lever is located next to the Viewfinder Arm attachment.

When depressing the filter lever, an ND 0.6 filter will be swung into the Viewfinder optical beam path.

Lite Viewfinder Filter lever fig.4/19

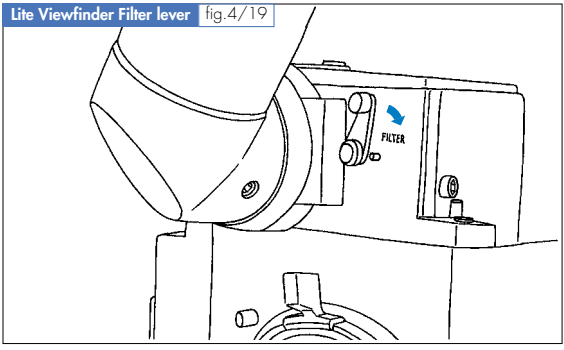

Studio Viewfinder arm (bayonet) fig.4/20

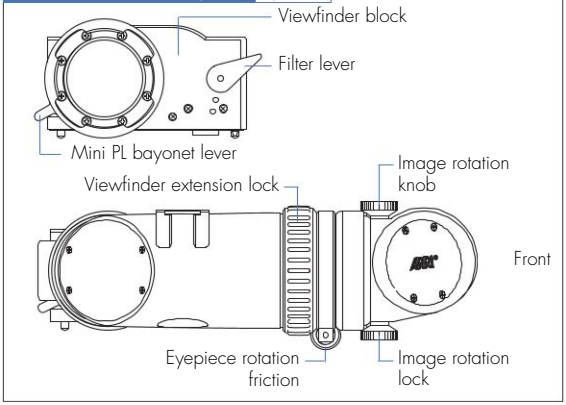

Studio Universal Viewfinder arm fig.4/21

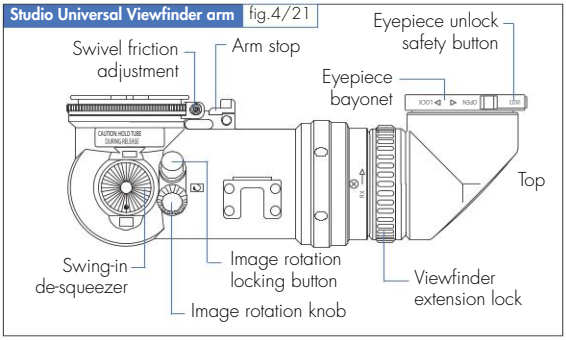

Studio Viewfinder arm (hinge type) fig.4/22

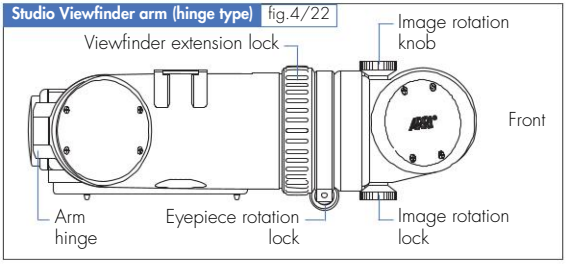

THE VIEWFINDER ARMS

The Viewfinder Arms can easily be swivelled to both sides of the camera. On the Lite Viewfinders as well as the hinge type Studio Viewfinder, the swivelling arms are mounted on the Viewfinder but they are only removable, e.g. for servicing in ARRICAM Maintenance Centres. On the bayonet type Studio Viewfinders, the Arm mount itself is rotatable. If necessary, e.g. for placing the Eyepiece on the camera right side while a Studio Magazine 300/1000 is mounted on top of the Studio, remove the Arm from the Viewfinder housing and remount it in the desired position.

SWIVELLING THE VIEWFINDER ARM

Only with the hinge type Studio Viewfinder and only when a Studio Magazine 300/1000 is mounted on top of the camera, the orientable Viewfinder Arm must be tilted forward in order to be able to swing the Arm over to the other side of the camera. To do so, loosen the Eyepiece rotation friction knob first. Then turn the Eyepiece upwards in its vertical position. Now press the hinge release knob and swing the Arm carefully forward. After pivoting the Arm to the other side of the camera, close the Viewfinder again. It locks automatically when a fixing pin entered one of the gauged holes.
Two optional Brackets, that can be attached with a 3 mm hex screw on the Viewfinder Block, enable the Viewfinder Arms to rest on the camera right side. The Lite Universal Viewfinder Bracket is dedicated to the Lite Universal Viewfinder. The Studio Viewfinder Bracket is dedicated to the Studio and Studio Universal Viewfinders.

Notice

If using either of the Lite Viewfinders on a Studio and you want to swing the arm over to the right side when a Studio Magazine 300/1000 is mounted on top, you must remove the magazine first in order to swivel the Viewfinder Arm to the right side of the camera.

ADJUSTMENT OF THE SWIVEL FRICTION

Preliminary remark:
Because this operation is quite sensitive, Maintenance personnel will carry out the adjustment before the equipment leaves the rental house.The friction of the swivel mechanism can be adjusted by means of a 2 mm metric hex wrench and a special ARRI tool (A 16SR 3) with the part number K5.26129.0 – it is a twin-pronged driver. To increase or decrease the tension, first loosen the locking sleeve by turning it counter-clockwise one turn. Once it has been loosened, turn the 2 mm metric hex wrench clockwise to increase – or counter-clockwise to decrease the tension. After that, do not forget to lock again the locking sleeve by turning clockwise the twin-pronged driver! Do not turn it more than one turn – its sufficient for a safe operation!

Swivel Friction Adjustment fig.4/23

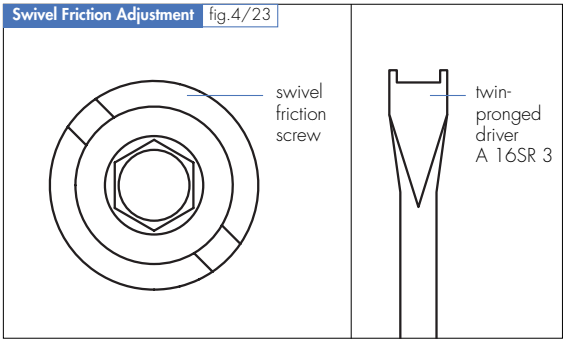

Lite Universal Viewfinder Arm Bracket fig.4/24

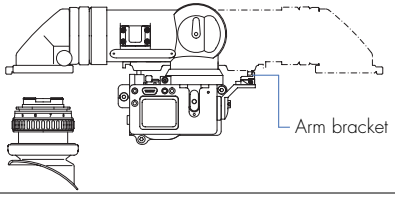

Caution!

1. *No dirt must get into the open Viewfinder System!*
2. *With well maintained cameras, pivoting is easily possible without having to apply force.*

Studio Viewfinder (hinge type) fig.4/25

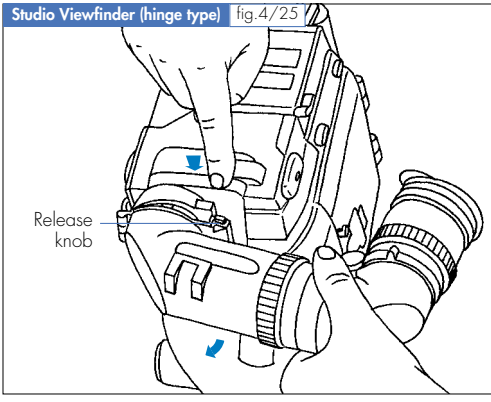

Studio Viewfinder (bayonet) fig.4/26

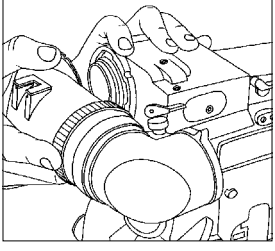

Studio Viewfinder (bayonet) fig.4/27

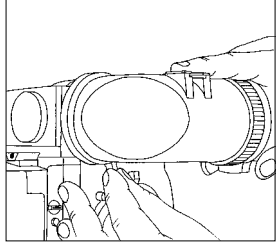

ERGONOMY

On all Studio and the Lite Universal Viewfinders, an extending feature allows the Eyepiece to move in and out from the camera body to facilitate left or right eye viewing. The Arms can be telescoped up to approximately 40 mm. Shifting does not change size, sharpness or quality of the viewfinder image. To extend or reduce the Viewfinder Arm length, turn the knurled ring towards the position labelled loose, then pull or push the Arm elbow to the desired length and retighten the knurled ring.

Studio Viewfinder extension arm fig.4/28

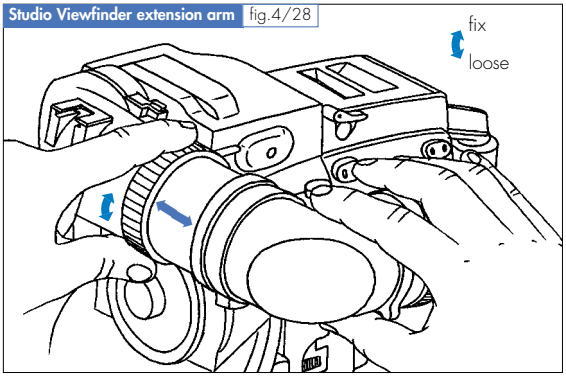

The other end of the Viewfinder Arm provides a mini PL bayonet mount to attach the Eyepiece. In order to adjust the Eyepiece position for a comfortable viewing, loose the eyepiece rotation friction knob located on the bottom side of the Viewfinder Arm.

FRICTION ADJUSTMENT OF THE PIVOTING EYEPIECE

The Eyepiece mounted to the Viewfinder's Arm rotates vertically through 360°. To turn an Eyepiece, loosen the eyepiece rotation friction knob below the Eyepiece mount, turn the Eyepiece and tighten the knob again. To loosen tension, turn counter-clockwise. To tighten tension, turn clockwise. Although this rotation friction adjustment can hold the weight of an Eyepiece Extension, we recommend to use the Levelling Rod – see fig.4/39.

Caution!
The tension has to be loosen when using the Levelling Rod!

Eyepiece rotation friction adjustment fig.4/29

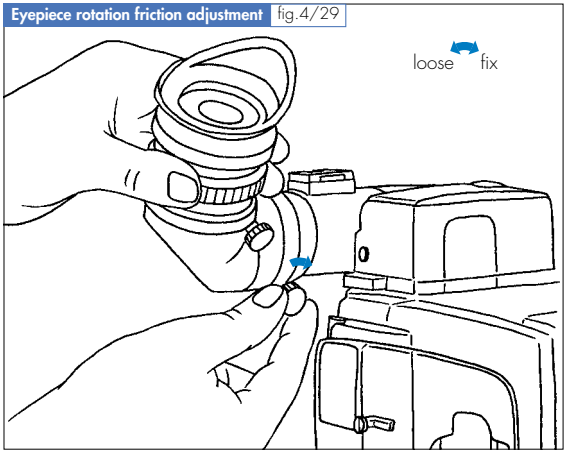

LEVELLING OF THE VIEWFINDER IMAGE

While rotating and/or swivelling the Viewfinder Arm, all Viewfinders automatically give an upright erect and correct left-to-right image, regardless of the angle of view. When mounting or removing an Extension Tube between Viewfinder Arm and Eyepiece, however, the image orientation has to be adjusted manually by turning the prism assembly 180°. In case a different image orientation is desired, you can turn it as you like. Except on the Studio Universal Viewfinder Arm, all other Viewfinder Arms have knurled image levelling adjustment knobs located at the bottom as well as on top. Loosen the knob at the bottom while holding the one on top; then turn the upper knob until you get the desired image. To fix the new position, tighten the knob at the bottom again while holding the one on top.

Image levelling adjustment fig.4/30

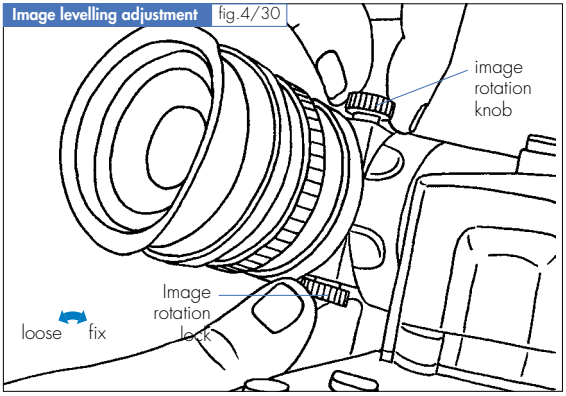

When using the Studio Universal Viewfinder Arm, hold the locking button pressed down and turn the image rotation knob until the image is levelled as you wish. To re-activate the automatic image levelling, turn the image levelling knob until it locks in one of the four locking positions. If the image is inverted, depress again the locking button and turn the levelling knob, while releasing the locking button, until it stops in the opposite locking position.

Studio Universal Viewfinder – image rotation fig.4/31

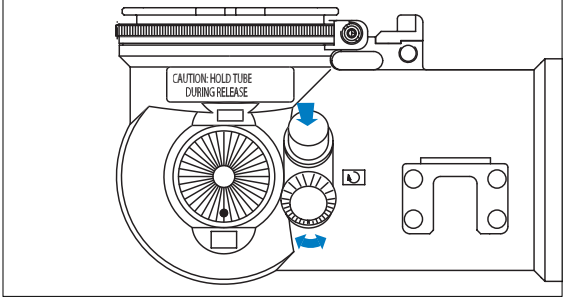

THE SWING-IN DE-SQUEEZER

The Studio and Lite Universal Viewfinders enable the switching between a regular and a de-squeezed viewfinder image. The de-squeezed viewfinder image will always stay levelled when the Viewfinder Arm rests in the "normal" horizontal position, regardless if the Eyepiece is on the left or on the right side of the camera or even when the Eyepiece is rotated. Only when the Viewfinder Arm is swivelled, the de-squeezed viewfinder image is not usable in the "in-between" position. Therefore, if the Eyepiece must be placed e.g. on the top rear of the camera, the use of the Studio Anamorphic Extension Tube is recommended.

THE EYEPIECES

Three Eyepieces are provided for the ARRICAM Viewfinders. A large Studio Eyepiece can be mounted on all Viewfinder Arms except on the Lite Viewfinder. Specially conceived for handheld operations, the Lite Universal Eyepiece can be mounted on the Lite Universal Viewfinder, but also can be used with the Studio Viewfinders. The Lite Viewfinder has its own smaller and lightweight optimised Eyepiece. The three Eyepieces may be focused by turning the knurled barrel. With the help of a scale labelled from 1 to 12, the assistant can easily adjust the lens to the eyesight of different operators. Corrections may be made in a range from approx. -5.5 to +5.5 dioptres; exception: when the Lite Universal Eyepiece is mounted on a Studio Viewfinder only -2 to +5.5 dioptres adjustment is possible.

Eyepieces fig.4/32

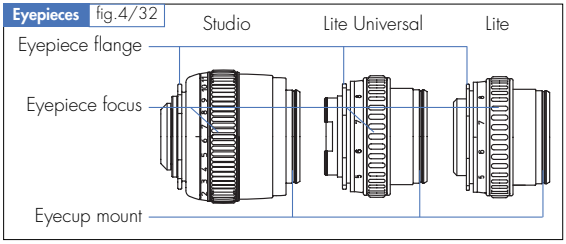

Caution!
Because of the different mounts, the Lite Eyepiece is not interchangeable with the other Eyepieces.

MOUNTING THE EYEPIECE

By means of bayonet mounts, the Eyepieces and Extension Tubes can be mounted and removed effortlessly from the Viewfinder Arms. To mount the Eyepiece, remove the protection cap by rotating the bayonet counter-clockwise. After checking that both parts are immaculately clean, gently insert the Eyepiece or Extension tube into the port and lock it by rotating the retaining bayonet clockwise until it is correctly seated. In order to prevent the Eyepiece or Extension Tube from falling out when it is not held firmly during its removal, an additional UNLOCK safety button has been incorporated into most Eyepiece bayonets. So, after rotating the bayonet lever, push the little button to release the Eyepiece or Extension Tube.

Eyepiece mini PL bayonet mount fig.4/33

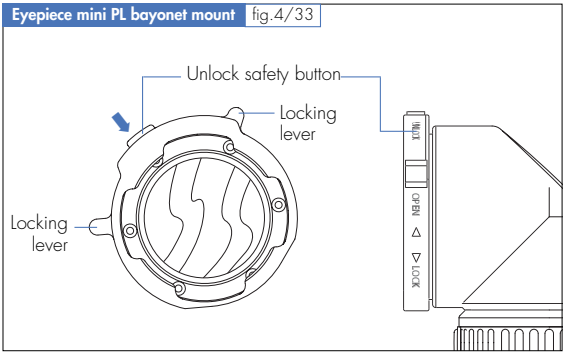

Eyepiece mounting fig.4/34

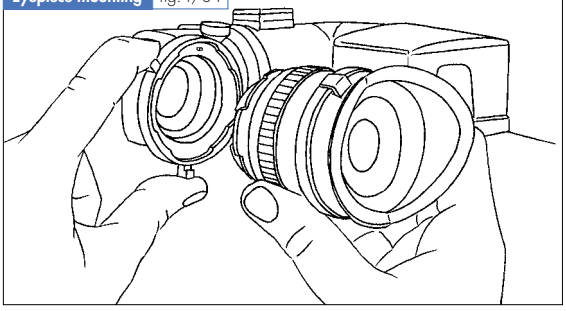

THE EYECUPS

ARRI provides two rubber cushionable Eyecups that can be mounted on all ARRICAM Eyepieces.
The rubber Eyecup is mounted on a holder which integrates a shutter mechanism. By moving the lever the Viewfinder can be opened or closed.

Eyecup fig.4/35

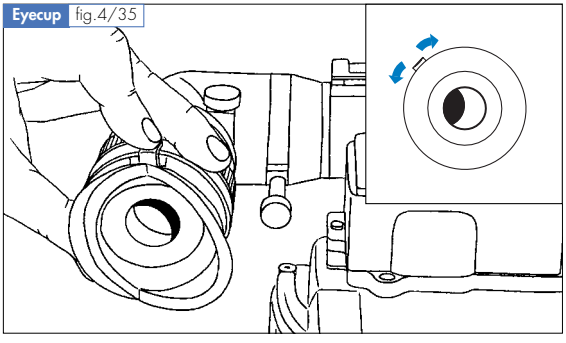

The difference between both Eyecups is that one is equipped with a heater that prevents the entry pupil from fogging in low temperatures, e.g. when filming outdoors in winter.

Heated Eyecup fig.4/36

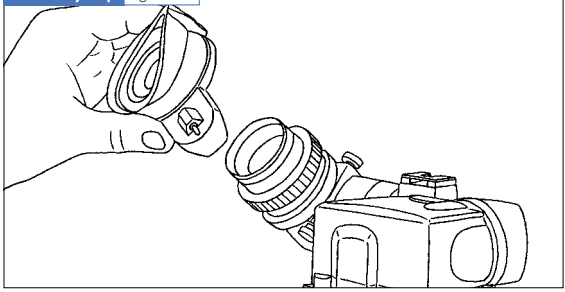

To mount the Heated Eyecup, pull the Regular Eyecup off the Eyepiece retaining ring and replace it with the Heated one by pushing it into the Eyecup attachment of the Eyepiece. In order to activate the heater, switch *OFF* the camera, plug one end of the short coiled cable into the Eyecup connector, the other end into one of the power outlets on the camera – see fig. 1/4 and 4/37. On the ARRICAM Studio, two connectors are located on the camera left side on top of the Camera Control Panel; on the ARRICAM Lite, the connectors are located on top of the camera front, left and right of the lens port. Set the heating level with the toggle switch to LO for lower heat output or to HI for higher heat output.

Heated Eyecup Cable – KC 63-SP-S fig.4/37

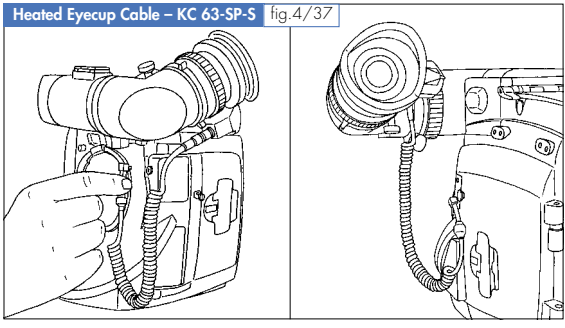

Caution!
If the camera is powered by battery, it is recommended to switch OFF the Eyecup heating during extended breaks in filming.

To clean the entry pupil, remove the Eyecup by simply pulling it straight out.
Eye friendly covers, such as chamois or cotton cloth, can be easily attached with a rubber band. Another useful cover are the terry cloth "wrist bands", well-known from tennis, as they are sweat absorbing, reusable and easy to attach.

THE EYEPIECE EXTENSIONS

ARRICAM supplies four different bayonet-mount extension tubes – three for the Studio and Lite Universal Viewfinders, and a lightweight one for the Lite Viewfinder – which can be mounted between the Viewfinders and the Eyepieces. The extension tubes, fitted with a receptacle for the ARRICAM Eyepiece Levelling Rod, are:

1. The Studio Medium Extension that brings the entry pupil of the Eyepiece about 15 cm/5.9" behind the film plane.

2. The Studio Zoom Extension with variable image magnifier (2x) brings the entry pupil of the Eyepiece about 30 cm/11.8" behind the film plane.

3. The Studio Anamorphic Extention with variable image magnifier and flip-in de-squeezer lens brings the entry pupil of the Eyepiece about 30 cm/11.8" behind the film plane.

Notice

Both the Zoom and Anamorphic Extensions have built-in magnifiers that allow even more critical eye-focusing. Turn the zoom ring to magnify the image of the Ground Glass in a continuous range. A mark on the ring indicates the standard image size.

4. The Lite Extension brings the entry pupil of the Eyepiece about 25 cm/9.8" behind the film plane. It has a built-in image magnifier that allows even more critical eye-focusing. Turning the knob switches the image of the Ground Glass from normal size to 2x magnification.

Eyepiece Extensions fig.4/38

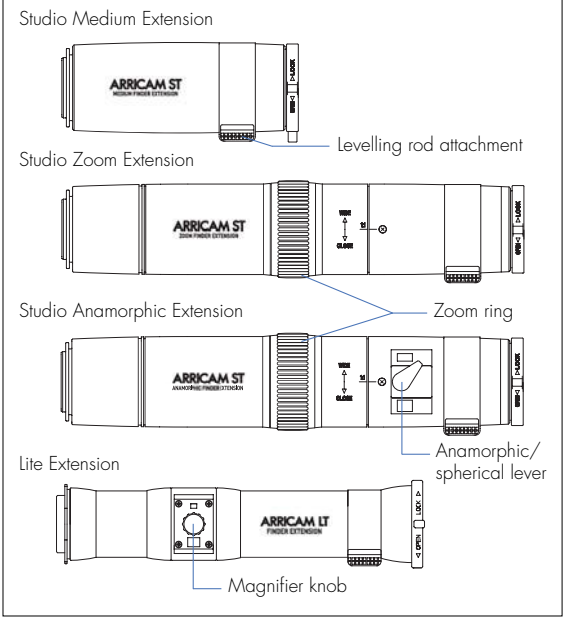

Notice

It is recommended to use the zoom or magnifier only when checking and not when shooting because only the centre part of the image appears in the Eyepiece.

VIEWFINDER LEVELLING ROD

A Viewfinder Support Levelling Rod may be attached to the Viewfinder Extensions. This rod is attached by sliding the sprung loaded dovetail into the holder. To remove it press the spring. The support is clamped to the head and its lenghts is adjustable.

Levelling rod fig.4/39

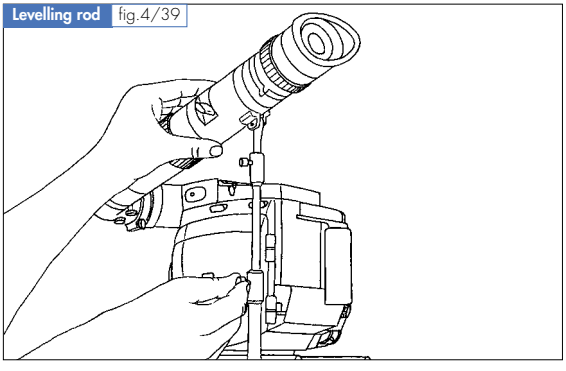

Levelling rod attachment fig.4/40

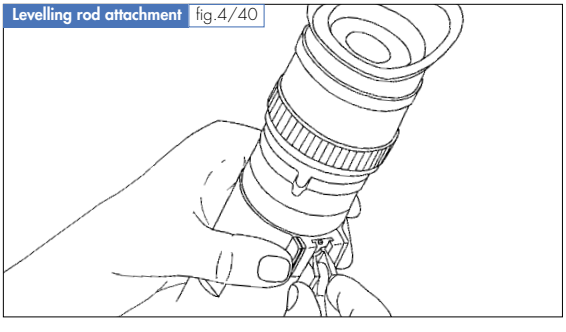

Caution!
The Eyepiece rotation friction adjustment has to be loosen when using the Levelling Rod!

FURTHER VIEWFINDER COMPONENTS

ARRI also offers several Ground Glasses as well as three Frameglow Modules and a Readout Unit.

THE ARRICAM FIELDLENS AND GROUND GLASS

The Fieldlens is located on top of the interchangeable Ground Glass.
All Ground Glasses of the ARRICAM Cameras are mechanically identical and may be used with the ARRICAM Studio as well as with the ARRICAM Lite.

Ground Glass & Fieldlens fig.4/41

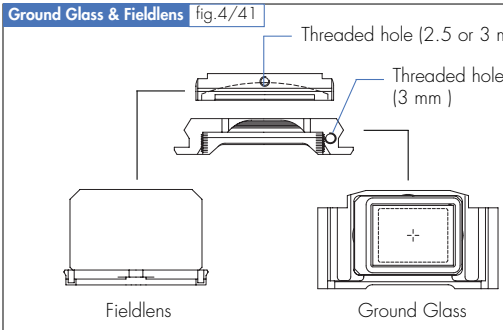

Caution!
- *The Fieldlens should only be removed by ARRICAM Maintenance Personnel, e.g. for cleaning purposes.*
- *The ARRICAM Ground Glasses are not compatible with any other ARRI or MOVIECAM Ground Glasses.*

The ARRICAM Ground Glass lies flat above the mirror shutter and has a metal holder with a thread in the right front corner.

HANDLING THE GROUND GLASS

Use the ARRICAM Combi Tool to remove or install a Ground Glass as follows:

Ground Glass mounting fig.4/42

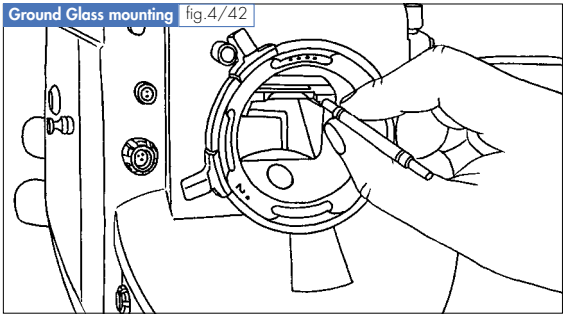

1. Push the DUST CHECK button in order to move the mirror out of the lens port cavity.
2. **Switch the Camera MAIN switch *OFF*!**
3. Screw the Combi Tool into the metal holder of the Ground Glass.
4. When the Combi Tool is screwed fully home, pull out the Ground Glass gently.
5. Clean the Ground Glass gently with a lens brush or small vacuum cleaner. Using an aerosol spray may be dangerous because of the pressure and the possibility for chemicals to drop on the glass.
6. When screwing the Combi Tool in or out, hold the Ground Glass holder only.
7. Push the Ground Glass frame gently all the way in until it rests against the stop and then unscrew the Combi Tool.

Notice

Do not touch with fingers or a solid object!
Do not moisten or wipe!
Never place the Ground Glass on its edges.
Do not use force!

THE FRAMEGLOWS

In order to make the frame lines of the Ground Glass visible while shooting dark scenes, ARRI provides small attachments for all Viewfinders called a Frameglow. Three different Frameglows, one for all Lite Viewfinders and two for the Studio Viewfinders, are available. The differences between the Frameglows are not only in the design but also in the technology employed. The difference in design is marked by the engraved letters LT and ST which show on which Viewfinder they can be attached.

The difference in technology is marked by the words LCD or MASK. The Studio LCD Frameglow, is usable only for shooting in Standard 35 format (not for Super 35!), and can only be mounted on a Studio Viewfinder.
With the Studio LCD Frameglow, beside two preset frame outlines, also a reticule can be faded in and out the viewfinder image by pushing the CROSSHAIR button. With the Mask Frameglows, a crosshair is permanently visible if it is marked on the exchangeable Mask. Last but not least, the brightness of all displayed lines on all three Frameglows can be continuously adjusted by turning the DIMMER knob. When turning the knob counter-clockwise, the brightness will diminish until it is no longer visible in the Viewfinder. Turning the knob all the way clockwise will set the Frameglow outlines and the crosshair of their maximum brightness.

The brightness of the frame line illumination is independent from the brightness adjustment of the camera displays.

Notice

1. *Frameglows cannot be mounted on the 100% Video Tops.*
2. *If a Magazine is attached on top of the ARRICAM Studio, the Lite Frameglow will not fit on the Lite Viewfinder.*
3. *On top of the Lite Frameglow, a shoe for accessories as well as a connector for the Lens Data Display are provided.*

MOUNTING THE FRAMEGLOWS

After removing both protection covers, attach the appropriate Frameglow to the Viewfinder with one 3 mm hex screw.

Lite Mask Frameglow fig.4/43

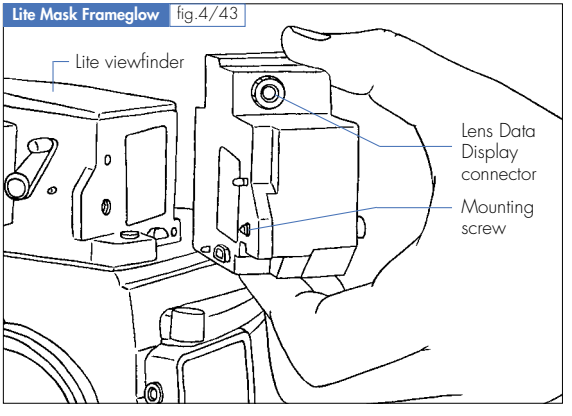

Notice

Care should be taken that:

1. *the camera is switched OFF by camera MAIN switch (also important when removing the Frameglow),*
2. *the Frameglow sits correctly on the Viewfinder,*
3. *the pins engage easily in the gauged holes and the connectors are properly seated,*
4. *both glass surfaces are absolutely clean.*

Frameglow Dimmer fig.4/44

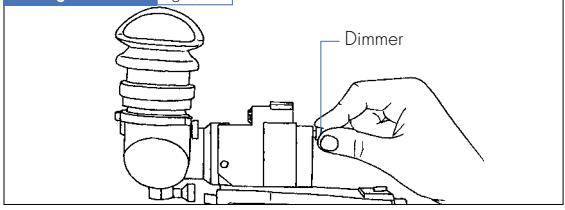

ADJUSTING THE ALIGNMENT OF THE MASK

This operation should be done by the ARRICAM Maintenance Centre before delivering equipment. In the case of a change of shooting format or when the luminous frames are not correctly aligned with the Ground Glass marking, the focus puller can improve the positioning of the frames. All adjustments can be made with a 1.5 mm metric hex wrench. Three adjusting screws allow the fine adjustment to the positioning of the Frameglow Mask.

Caution! *Never use force.*

Notice

On the Lite Mask Frameglow, a small cover must first be slid away by moving the button in order to access to the adjusting screws.

Frameglow Adjustment fig.4/45

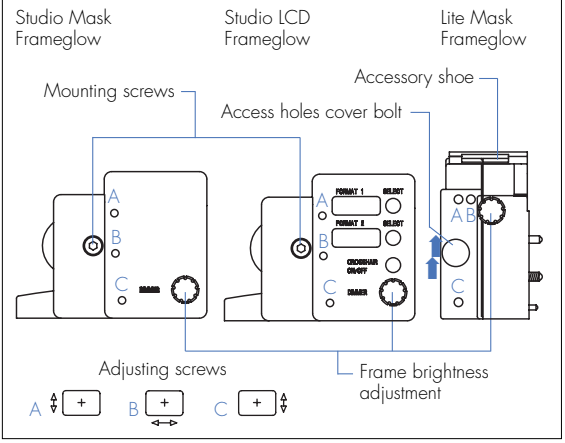

THE STUDIO LCD FRAMEGLOW

(for Studio Viewfinder only)

Studio LCD Frameglow fig.4/46

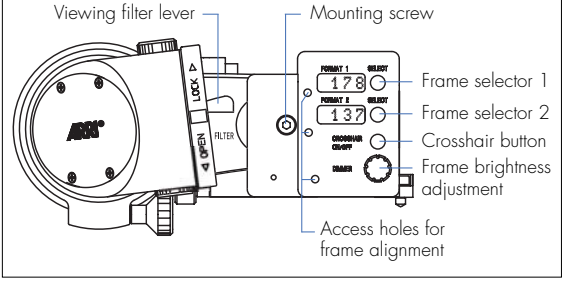

By means of a sophisticated electronic design, the Studio LCD Frameglow fades in one or – simultaneously – two luminous frames. Four frame outlines with the following aspect ratios are provided in the Studio LCD Frameglow:

1 : 1.33 (TV)
1 : 1.375 (Academy)
1 : 1.78 (16/9 or HDTV)
1 : 1.85 (US/UK Wide Screen)

HANDLING THE STUDIO LCD FRAMEGLOW

While the camera is powered and no figure is displayed on the Frameglow, just push one of the buttons, so the Studio LCD Frameglow shows the preselected aspect ratio(s). Accordingly, the frame outlines will glow red in the Viewfinder. By pressing either the SELECT 1 or SELECT 2 button, you may step through the aspect ratios preset in the factory. After having displayed four different aspect ratios, the display will extinguish, showing that no aspect ratio has been selected. After five button pushes, the list will repeat. If figures are visible in FORMAT 1 and FORMAT 2 displays, two aspect ratios are set simultaneously.
The Frameglow memory stores the latest options chosen, even when the camera is disconnected from its power supply.

Notice

In order to save power, the figures displayed on the Frameglow Module will fade out if no control has been used in the last 5 sec. To reactivate the display, just push one of the buttons.

THE STUDIO & LITE MASK FRAMEGLOWS

Instead of using LCD technology, thE Mask Frameglow inserts the luminous frame outlines of a single or combined aspect ratio(s) into the viewfinder image. A set of Masks with different aspect ratios and/or aspect ratio combinations is provided by ARRICAM.

To exchange the Mask, first remove the cover (unscrew the retaining 2 mm screws), then take the Mask out of the receptacle by means of the ARRICAM Combi Tool and slide carefully the requested one into the Mask Frameglow. Except for three Masks, the same physical Masks can be used with the Studio or Lite Mask Frameglows.

Studio & Lite Mask Frameglows fig.4/47

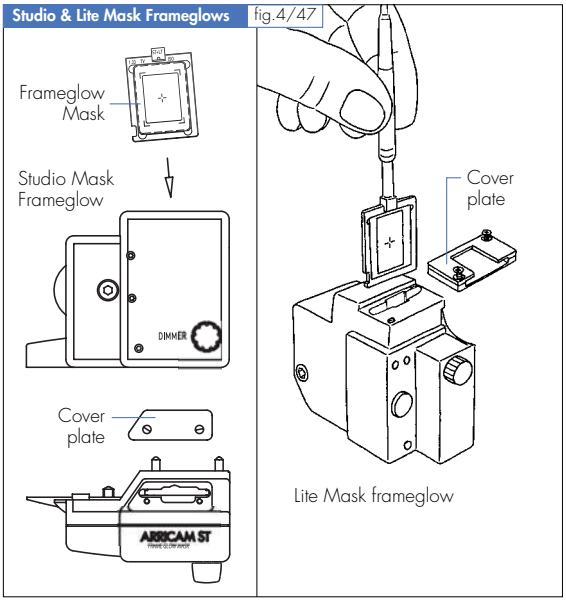








THE INTEGRATED VIDEO SYSTEM COMPONENTS

The Video Assist System Components

Important notes and safety specifications



- Turn *OFF* the Video Assist immediately in case of malfunction!
- Do not use in the presence of flammable gas!
- Do not disassemble!
- Use only ARRI cables!
- Use ARRICAM Video Assist components only with ARRICAM Cameras and only as described in this manual!
- Assembly and initial installation should be carried out only by persons who are familiar with the equipment!
- Remove all cables before transport or servicing!
- Repairs should be carried out only by authorized ARRICAM Maintenance Centres!
- Use only original ARRI replacement parts and accessories!
- Check all operations on the corresponding monitor!
- In wet weather the normal safety precautions for handling electrical equipment should be taken!
- Keep the equipment dry and free of salt, sand or dust!
- Keep optical surfaces clean!
- Do not remove or turn any screws which are secured with paint!
- Turn the camera MAIN switch *OFF* before mounting or removing electric components or when connecting or removing the power supply!
- Keep equipment away from strong magnetic fields!
- Avoid sudden changes in temperature!
- Never feed power onto sync or video lines!

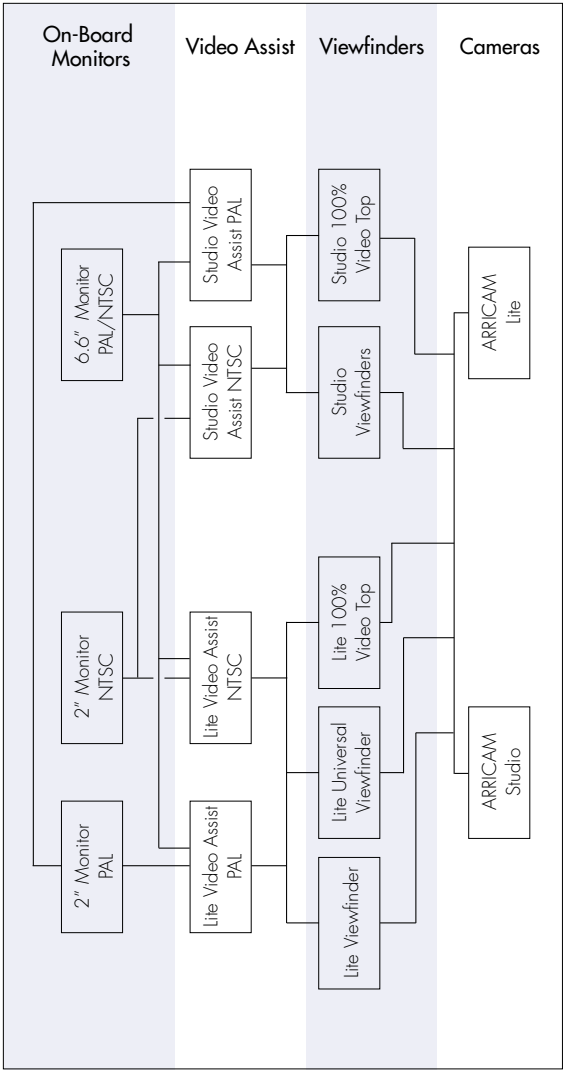
On-Board Monitors
Video Assist
Viewfinders
Cameras
2" Monitor PAL
2" Monitor NTSC
6.6" Monitor PAL/NTSC
Lite Video Assist PAL
Lite Video Assist NTSC
Studio Video Assist PAL
Studio Video Assist NTSC
Lite Viewfinder
Lite Universal Viewfinder
Lite 100% Video Top
Studio Viewfinders
Studio 100% Video Top
ARRICAM Studio
ARRICAM Lite

The ARRICAM Video Assist System offers more than just a video tap picture. As well as the viewfinder picture, most of the camera status and LDS Lens information can be displayed on the monitor and/or recorded on tape or hard disc. This information, together with the identification of the shot, e.g. provided by the In-camera Slate Box (ISB), will be useful for further steps in production and post-production. By means of a sophisticated, but intuitive and user-friendly menu, several options can be selected. For example, a flicker compensation, a picture storage capability, a frame line generator and the ability to insert a man and/or machine readable information in the picture are provided.
To access all the different options, only a single dial needs to be operated. However, the main parameters can be changed straightaway by pushing dedicated buttons.

THE ARRICAM VIDEO ASSISTS' COMPONENTS

Both Studio and Lite Viewfinders have dedicated Video Assist systems: The Studio Video Assist for Studio Viewfinders and the Lite Video Assist for Lite Viewfinders. ARRI also provides two small, colour on-board video monitors (2" and 6.6") which can be mounted on the ARRICAM Cameras, by means of articulated arms.

THE VIDEO ASSIST

Apart from the different housings, both ARRICAM Video Assists are identical in their video characteristics and almost similar in handling. Only the position of the Video Assist iris and the positioning and focusing of the CCD sensor are different.
Both Video Assists are equipped with lenses that cover the Super 35 acquisition format.

Therefore no mechanical change to the Video Assist needs to be done when changing the format from Standard 35 to Super 35.Depending on the video standard used, each Video Assist component is labelled either PAL or NTSC. Please be aware that only components working on the same standard are compatible (except the dual-standard 6.6" on-board monitor).

Studio Video Assist – front fig.5/1

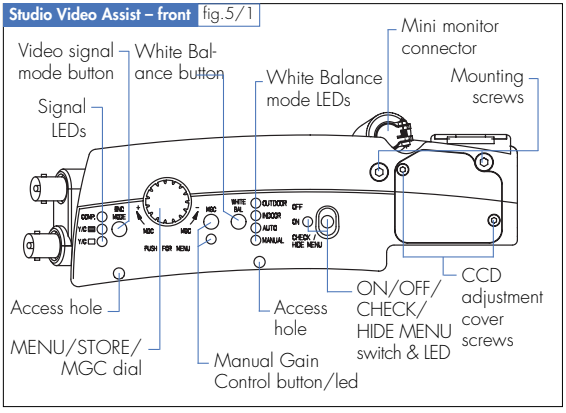

Lite Video Assist – front fig.5/2

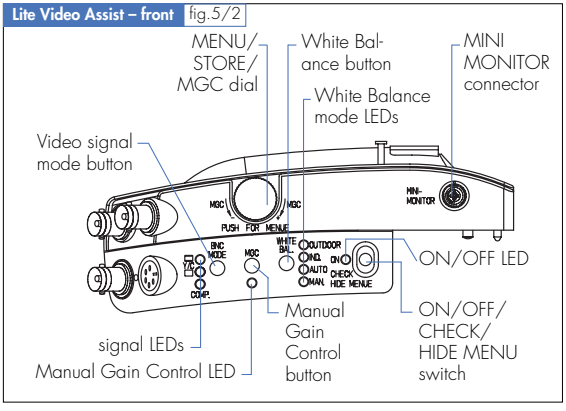

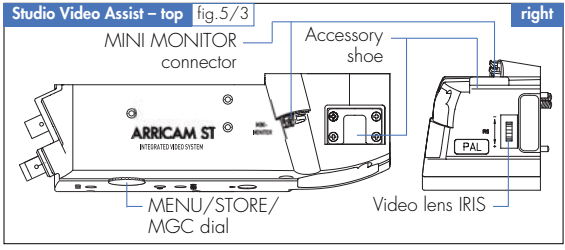

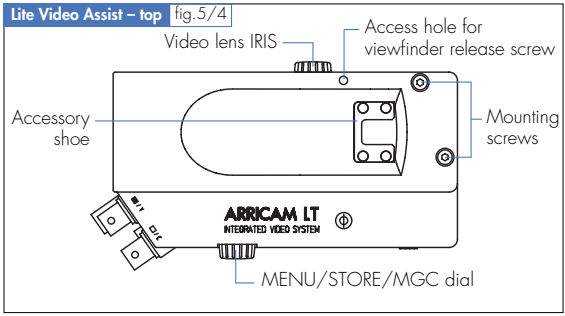

THE 100% VIDEO TOPS

If an Optical Viewfinder is not required, e. g. when the camera is mounted on a Steadicam or a remote head, both Video Assists can be mounted on the ARRICAM Cameras by means of 100% Video Top. ARRI provides one 100% top for each Video Assist. These 100% Video Tops are mounted on the camera bodies in the same way as the Viewfinders. Both 100% Video Tops may be used on the STUDIO as well as on the LITE but only with its respective Video Assist.

MOUNTING THE VIDEO ASSISTS

On the two Studio Viewfinders and the Studio 100% Video Top, the Studio Video Assist is mounted on the right hand side. The Lite Video Assist, specially designed for the two Lite Viewfinders and the Lite 100% Video Top is be mounted on the top.

Studio Video Assist: mounting fig.5/5

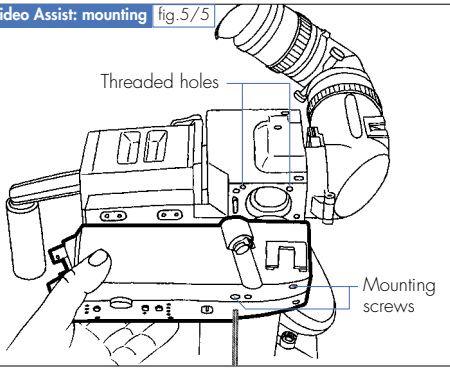

Lite Video Assist: mounting fig.5/6

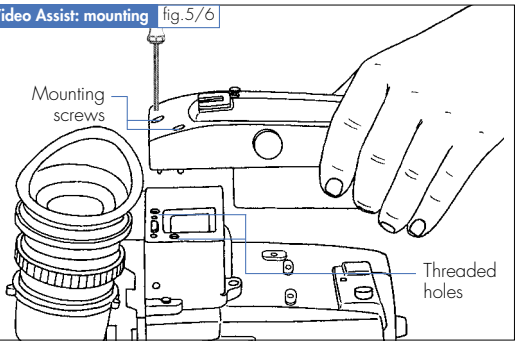

Studio 100% Video Top mounting fig.5/7

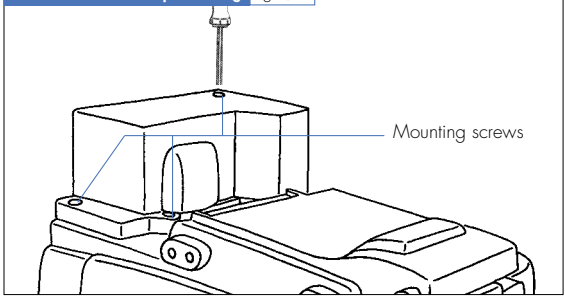

Studio Video Assist mounting on 100% Video Top fig.5/8

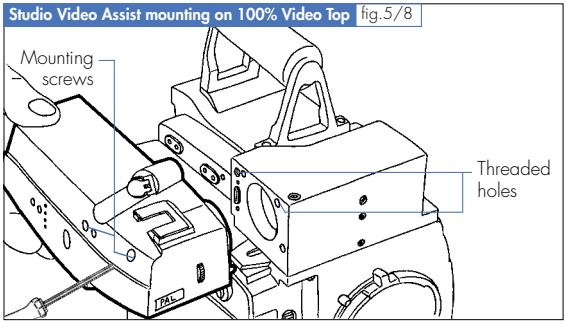

After removing the protection cover (two 3 mm hex screws) and checking that both parts (connectors, glass surfaces) are absolutely free of dust and fingerprints, mount the Video Assist to the Viewfinder or 100% Video Top. While tightening the screws, the connectors will fit together automatically. Therefore be sure that the Video Assist sits securely on the Viewfinder or Video Top.

Caution!

Be sure that the camera is not powered during mounting or removing a Video Assist.
Do not slant the Video Assist while mounting it on a Viewfinder or on a 100% Video Top Adaptor!

THE CONNECTORS AND THE LED INDICATOR

On top of the Studio Video Assist housing, a 4 pin Fischer connector is covered by a aluminium cap. By lifting this cap, you will be able to connect one of the two ARRICAM On Board Monitors. On the Lite Video Assist, this Mini Monitor connector is located on the right side of the housing.

Video Assist connector for Mini Monitor fig.5/9

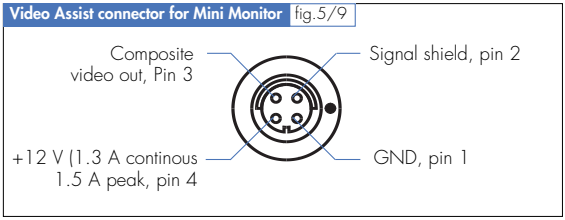

On the left side of the Video Assists, four connectors and one LED are located:
The LED lights up green when an external video sync signal is successfully fed to the Video Assist – see fig. 5/10 and 5/11.

Notice

When attaching a cable to one of the connectors, be sure not to bend it. Providing a strain relief will do fine.

In order to avoid interference, be sure not to install the video cable close to electric drives, e.g. lens motors.

Be sure the cable has enough slack to accomodate the full range of camera movements, either if it is operated manually or by a remote head! We recommend the use of Y/C cables, which are delivered with the units, for even better image quality.

Studio Video Assist – rear fig.5/10

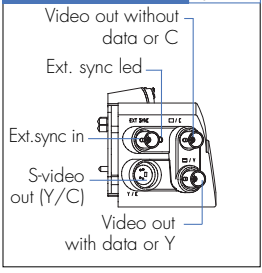

Lite Video Assist – rear fig.5/11

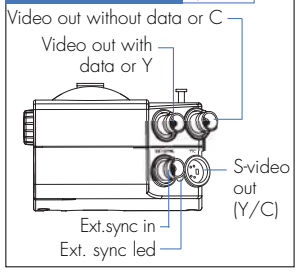

THE VIDEO OUT SIGNAL (BNC CONNECTORS)

By means of the (video signal) BNC MODE button – see fig. 5/1 and 5/2 – you may select the kind of video signal you would like to output. Three options are available and the selected choice will be indicated by an LED.

Studio BNC connectors fig.5/12

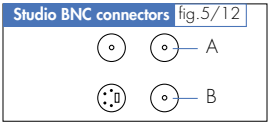

Lite BNC connectors fig.5/13

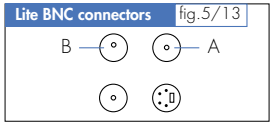

video with data on screen
video without data

Y= luminance signal
C= chrominance signal

COMP.	composite video with on-screen data	A
	composite video without on-screen data	B
Y/C.	Y portion of the video, with on-screen data	A
	C portion of the video signal, with on-screen data	B
Y/C.	Y portion of the video, without on-screen data	A
	C portion of the video signal, without on-screen data	B

Notice

If you would like the video picture in Black & White, please select either Y/C or and connect the video cable to "A" output – see fig. 5/12 and 5/13.

Standard BNC connection:

Video Cable Connections fig.5/14

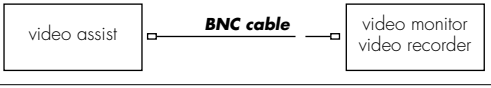

THE S-VIDEO SIGNAL

Provided that the monitor has an S-Video connector, using the S-Video signal instead of the composite one will provide an even better video picture. S-Video cables allow connection up to about 3 m/10 ft.

Video Cable Connections fig.5/15



For longer distances a pair of more durable BNC cables can be used.

Another possibility is to use two BNC cables and an S-Video adapter cable: Red = C, White = Y

Video Cable Connections fig.5/16

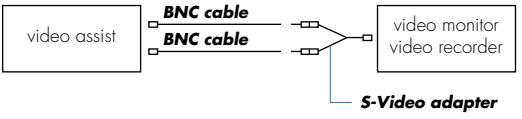

This configuration will provide the best possible result when the distance between the ARRICAM and the monitor(s) is longer than 10 m/33 ft.

Caution!
The length of the two BNC cables should be roughly the same.

Notice
If video pictures with and without inserted data are needed simultaneously, e.g. viewing on monitor without data while recording on hard disc with the data inserted, two separate connections must be installed.

Video Cable Connections fig.5/17

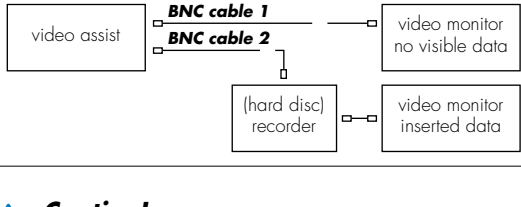

Caution!
A standard S-Video connector has no retaining fixture similar to a BNC one. Therefore, the S-Video connected cable must be secured in order not to slip accidentally out of the connector.

THE EXT. SYNC SIGNAL

When video images are provided from several ARRICAM Video Assists, e.g. when cameras are used in a multiple camera application and the video images must be mixed together, they should be synchronized. To do so, a BNC cable must connect the Video Assist e.g. of the camera A with the one of the camera B. The cable will be plugged in a VIDEO OUT connector on camera A and connected to the EXT SYNC IN connector on Camera B. In the Video Config. menu, EXT SYNC (not TC) has to be selected.

Video Cable Connections fig.5/18

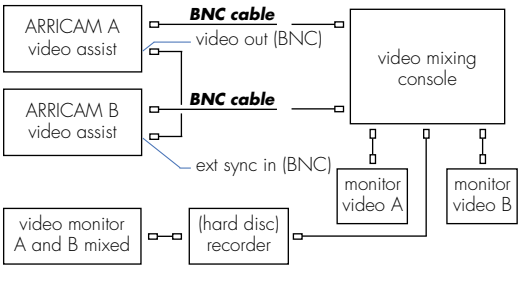

Notice

The synchronization provided by connecting a VIDEO OUT connector to a EXT SYNC IN connector will only affect the video signal. If a synchronization of the ARRICAM Cameras itself is required, please see the dedicated explanations later in this chapter under On Screen Display menu (Sub-menu CAMERA SYNCED), page 189 or consult chapter 7 – Camera Control Boxes (synchronization with the Speed Control Box), page 299.

THE MECHANICAL ADJUSTMENTS OF THE CCD

Notice

This operation should be done by the rental house before delivering equipment. Once set, these adjustments should not move, but if adjustment does become neccessary, the focus puller can improve the alignment and the focus of the video image. Adjustments are made with a 1.5 mm metric hex wrench.

Caution!
Never use force.

CCD ADJUSTMENTS ON THE STUDIO VIDEO ASSIST

In order to access to the controls, first the cover must be removed from the Video Assist by unscrewing two screws with a 1.5 mm metric hex wrench.

Studio Video Assist CCD adjustment fig.5/19

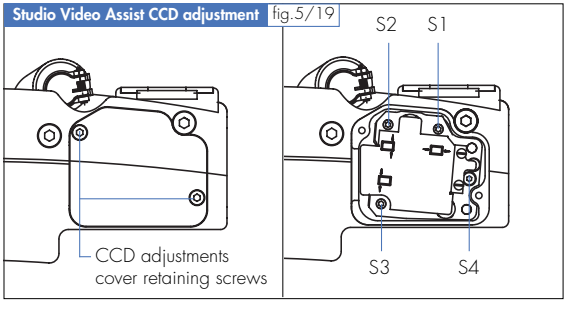

Three screws allow the fine positioning of the CCD and one screw (S4) moves it in and out to obtain the best possible focus.

Screw S1 moves the video image on the monitor horizontally.
Screw S2 and S3 rotate the image around a point which is located in the middle of the left side respectively right side of the image. To shift the image vertically, you will have to alternate the adjustments of both screws S2 and S3 to obtain the desired position.

Studio Video Assist image adjustment fig.5/20

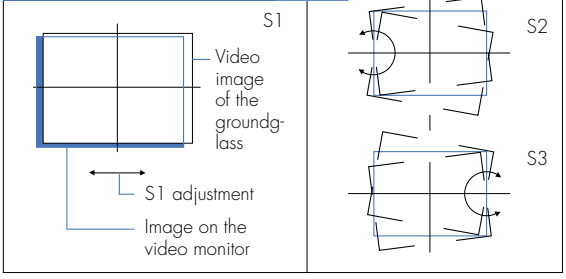

CCD ADJUSTMENT ON THE LITE VIDEO ASSIST

Four 1.5 mm screws to be turned with an metric hex wrench allow the CCD adjustment on the Lite Video Assist.

Lite Video Assist image adjustment fig.5/21

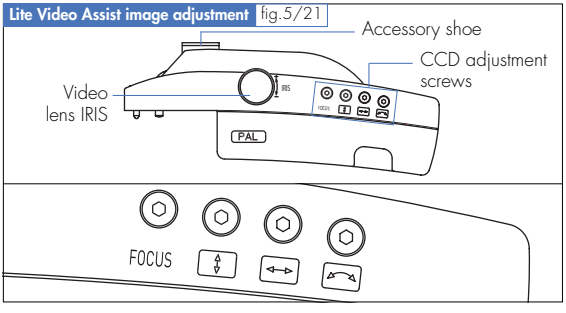

THE BNC MODE BUTTON AND THE THREE LEDS

See page 169 for explanations.

THE WHITE BALANCE BUTTON AND THE FOUR LEDS

By pushing the WHITE BAL button several times, you cycle through the four options to adapt the Video Assists' CCD to the lighting conditions (colour temperature) and the photographic conditions (use of compensation or coloured filter).

1. When shooting in daylight condition (about 5.600°K natural daylight, HMI or blue filtered tungsten luminaries) and when no compensation filter is used, you may obtain a good result in selecting OUTDOOR. If a Wratten 85 or similar filter is used to compensate daylight because the film used is balanced for 3.200°K, selecting INDOOR will offer a good result.

2. When shooting in interior conditions (about 3.200°K electrical light or studio halogen luminaries) and when no coloured filter is used, you should obtain a good result in selecting INDOOR.

3. By selecting AUTO, the electronics will adapt automatically the CCD in order to obtain a "natural" rendition of the scene.

Notice

When using the AUTO mode for adjusting the white balance, one should be aware that the colour of the Frameglow will affect the result. So, the more "red light" that surrounds the frame, the more cyan the video picture will appear.

4. A better result, specially when shooting in mixed lighting situation, will be obtained by using the MANUAL white balance adaptation. By using this option, you are able to change the white balance settings in the menu. For more details see the WB/ GAIN description on page 183.

THE VIDEO LENS IRIS CONTROL

To control the brightness of the video image, two parameters can be changed on the Video Assist: the video gain setting and the video lens iris adjustment.
The lens of each Video Assist is equipped with an iris to control the amount of light falling on the CCD. However, because of the very effective AGC (Automatic Gain Control), which works over many f stops, it is suggested to normally leave the Video iris fully open.

THE MGC (MANUAL GAIN CONTROL) BUTTON AND THE LED

The gain is the electronic amplification of the video signal. Higher gain provides a brighter image but the video picture quality deteriorates with increased video 'noise'. That may bother the Director and other on the set. Beacause of this it is preferable to first set the iris of the Video Assist lens wide open before increasing the gain manually.
Since the Automatic Gain Control (AGC) averages the image brightness, in some lighting situations (strong backlight, for instance) Manual Gain Control (MGC) will yield a better video image. Push the MGC button to toggle between Manual Gain Control (MGC LED *ON*) and Automatic Gain Control (MGC LED *OFF*). When MGC is *ON*, rotate (do not push it) the dial clockwise to increase or counter-clockwise to decrease the video gain.

Notice

If the video image looks too dark or if there is too much electronic noise,

- *first check the iris setting of the lens on the camera; it should be set for the correct film exposure.*
- *secondly check the iris setting of the Video Assist; it must be wide open.*
- *now check if the gain control is set on AGC.*

If the video image is still too dark,

- *it is possible that the video exposure time is set to FILM (see submenu VIDEO CONFIG/EXPOS.TIME on page 185), the shutter opening is very small (e.g. 22.5°) or a high frame rate (e.g. 50 fps) is selected.*
- *it is possible that a strong light is coming directly into the lens (e.g. strong backlight from a window or from the sun during sunset).*

In these cases, switch to MGC (Manual Gain Control) and raise the gain a bit.

ON/OFF/CHECK/HIDE MENU SWITCH AND LED

Before switching *ON* the video system, first make sure that the camera is powerded *ON*. Now move the ON/OFF/CHECK/HIDE MENU switch on the Video Assist to the *ON* position. The ON LED will light up.

CHECK OR HIDE THE MENU

To display a summary of all options chosen from the menu while the OSD (On Screen Display) is not visible, push the ON/OFF/CHECK/HIDE MENU switch all the way down to CHECK/HIDE MENU. The OSD will automatically fade out after a few sec. To hide the OSD menu, push the ON/OFF/CHECK/HIDE MENU switch

all the way down to CHECK/HIDE MENU. This is useful if the image needs to be checked while selecting options or making adjustments in the On Screen menu. See the configuration summary on page 208.

THE MENU/STORE DIAL

In order to navigate through the elaborate menu of the Video Assist functions, only handling one single user-friendly dial is needed. The dial can be pushed briefly or longer (about 3 sec.) and turned to the left and to the right. By means of these four operations, each one of the video functions can be selected, activated, and stored.

Video Assist – menu/store dial fig.5/22

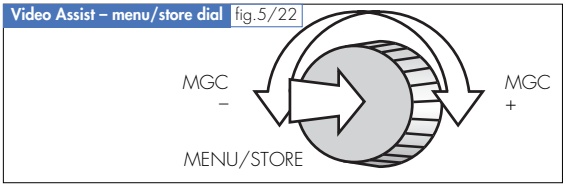

Notice

1. When the navigation function has not been activated and the Manual Gain Control (MGC) is *ON*, the dial serves to increase (by turning it clockwise) or decrease (by turning it counter-clockwise) the gain level.
2. As soon as the On Screen Display (OSD) is activated (by having pushed the dial for about 3 sec.), there will always be data to all outputs in order to be able to use the menu.

Caution!

By pushing the dial while the OSD is not visible, the actual image will be stored in the Video Assist memory, deleting the previous stored image.

While the OSD menu is *ON*, no changes of the settings by means of the buttons are possible. The data in the inserted windows are not updated.

THE VIDEO ASSIST ON SCREEN DISPLAY (OSD)

Beside the "normal video tap" function of the ARRICAM Video Assist System, many features are offered to the users in order to facilitate not only the work on the set, but also the processes in post production houses.
In order to adjust the various settings, first you have to make yourself familiar with the easy to use navigation system. To navigate, only the MENU/STORE dial is used; it is either pushed or turned.

Notice

No OSD is available while the camera is *RUNNING*.



By pushing the dial briefly while the OSD is visible, you will activate the function or option marked by the menu-cursor **->**.
By pushing the dial for about 3 sec. – this can be done at any time – you will either open or close the On Screen Menu. While closing the OSD, the latest displayed options are automatically activated.



By turning the dial, you will either:

- move the menu-cursor **->**,
- move the character-cursor **X**,
- change the option between e.g. **ON**, and **OFF**, **SMALL**, and **LARGE**, etc.
- adjust a value, e.g. from **48** to **12** or to **54**,
- position a line, a frame or a window on the display.

THE MENU STRUCTURE

The menu is structured dynamically. This means that the various related levels (Sub-menus) will appear automatically when a higher menu level is selected. The first level – the Main Menu list (A) – will appear when the dial is pushed for about 3 sec.
The cursor **->** will face one of the Sub-menu titles. By turning the dial, the cursor will scroll up and down.
Each of the Sub-menus offers different options. By pushing the dial, the selected Sub-menu will show its list of options (B). Each option offers the possibility of selecting one of several settings (C) listed on the third level.
On each displayed level, the option EXIT, is provided. By selecting exit and pushing the dial shortly, you will climb the program to the next superior level (D). When you push more than 3 sec., the latest changes will be activated and the OSD will fade out.

(A)

```
-> MENU 1
   MENU 2
   MENU 3
   MENU 4
   MENU 5

   EXIT
```

(B)

```
   OPTION 1
   OPTION 2
-> OPTION 3
   OPTION 4

   EXIT
```

(C)

```
   SET 1 = OFF
-> SET 2 = HIGH
   SET 3 = 48

   EXIT
```

(D)

```
SET 1 = ON
        OFF
SET 2 = LOW
        HIGH
SET 3 = XX

EXIT
```

(xx = 0 to 99)

THE CURSOR

While turning the dial, the cursor **->** will move from line to line. As soon as the desired option is reached,

a short push on the dial will select it. Remember, if the dial is pushed longer than 3 sec., the OSD will fade out. When an option is selected, all its functions and settings will appear in a list. Now a function or a setting can be selected by turning the dial.

When the cursor **->** shows a function, a push on the dial will activate this function and the setting can be chosen again by turning the dial. While pushing the dial briefly, the selected setting is confirmed.
The navigation in the menu is very simple and, because of its logical structure, can be learned in a few minutes.

THE SETTINGS

By turning the dial, the following changes can be made:
Changing of options: e.g. ON > OFF; LIGHT > DARK
Cycling several preset settings: e.g. SMALL > MEDIUM > LARGE; DEFAULT > CONFIG USER1 > CONFIG USER 2 > etc.
Changing of position: e.g. vertical shift, horizontal shift
Entering text: while turning the dial, the character-cursor **X** will mutate to letters and numbers. As soon as the desired character is On Screen, it will be saved and the cursor will move left to the next possible place by pushing the dial briefly.
Leaving the OSD menu: There are two ways to exit the menu:

1. To leave the actual menu level and to return to one menu level higher, move the cursor to EXIT and push the dial.
2. To close all menus and to leave the On Screen Display, push the dial for about 3 sec.

Notice

The menu can be left at any time.

Caution!

The following menu description is related to the Software Version V2.04 Dec. 2002. To be sure that the latest software is installed, please check it by selecting the Sub-menu *CONFIG SET. See page 207.*

THE FIRST LEVEL – THE MAIN MENU

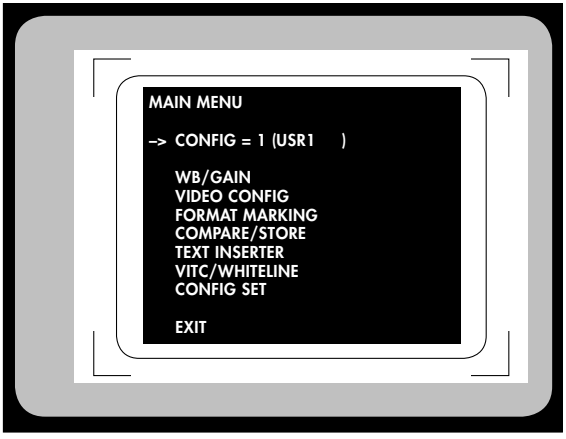

THE SECOND AND FURTHER LEVELS – THE SUB-MENUS

MAIN MENU *CONFIG*

-> CONFIG = 1 (USR1)

By pushing the MENU/STORE dial for about 3 sec., the first menu level will appear. On top of the menu window, the name of the actual displayed level (here MAIN MENU) is indicated.
In the first line the cursor shows **CONFIG = 1 (USR1)** . Beside the possibility to use the default configuration

= 0, the MAIN MENU offers the possibility of selecting between six customised configurations available in the Video Assist memory.
The settings of these six configurations (WB/GAIN, VIDEO CONFIG, FORMAT MARKING, COMPARE/ STORE, TEXT INSERTER and VITC/WHITE LINE) will be done with the Sub-menu CONFIG SET – see pages 182–209. There, the six individually preset configurations will automatically be numbered from 1 to 6 and you may also add a name for them in the brackets. The memory will save the configurations even when the camera is not powered.

Notice

To check a summary of the settings saved in the memory (see page 209) of the selected configuration, close the OSD by pushing the dial for 3 sec. and push the ON/OFF/CHECK/HIDE MENU switch all the way down to CHECK/HIDE MENU position.

MAIN MENU *WB/GAIN*

–> WB/GAIN

While activating the WB/GAIN Sub-menu, you will be able to manually adjust the colour balance and the gain of the Video Assist. For "normal use", the selection of the colour balance as well as the gain can be made using the WHITE BAL button as well as the MGC button. The OSD menu allows fine adjustments of all preset settings besides the default one. By selecting e.g. IND. RED in the WB=INDOOR Sub-menu, you will be able to alter the factory presetting by reducing or raising the value in a range of 0 to 99.
If the individual factory setting of the colour saturation is e.g. 52, you will be able to change it from 52 to 0 (–52 steps) or 52 to 99 (+47 steps).

In AUTOMATIC, the electronics will analyse the light entering the camera and offer a neutral rendering of the colours, e.g.

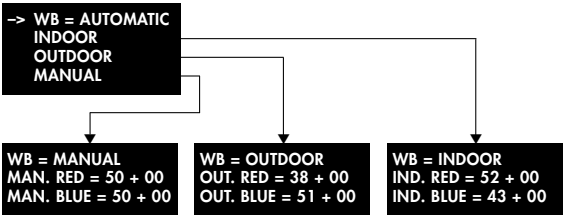

In the same way, the MANUAL GAIN can be adjusted in a range from 0 to 99.



MAIN MENU VIDEO CONFIG



The VIDEO CONFIG Sub-menu allows the selection of several options related either to the video image rendering, the signal provided by the Video Assist or the synchronization of the camera.



MAIN MENU *VIDEO CONFIG* *FLICKERFREE*

```
–> FLICKERFREE = ON
                 = OFF
```

The flicker effect on video monitor results from the difference between the frame rate of the film camera and that of the Video Assist. In selecting the option *ON*, the flicker will be fully eliminated. This is achieved by storing the digital image into a video frame storage while the mirror is in the viewing position and then displaying this picture in the correct timing of the video system. The FLICKERFREE option works when the frame rate of the camera is set faster than 1 fps.

Notice

The storage of the digital image causes a slight delay, which is not desirable in some crucial time conditions, e.g. motion control or shooting singers or musicians with play-back sound. Therefore it is possible to select the FLICKERFREE = OFF option.This will eliminate the delay at expense of the return of flicker.

Caution!

The time-code information such as time-code, user bits, VITC and WHITELINE is not valid if FLICKERFREE = OFF is selected.

MAIN MENU *VIDEO CONFIG* *EXPOS. TIME*

```
–> EXPOS. TIME  = FIXED
                  = FILM
```

When the mode FIXED is selected, the exposure time of the CCD will automatically be calculated accordingly to the formula 1/(fps x 2) regardless whether the

video standard is PAL or NTSC. The shutter opening is considered 180° fixed. Example: the fps rate is 24; the exposure time will be 1/(24 x 2) = 1/48 Sec.

In selecting the option FILM, the Video Assist electronics calculates the film exposure time while the film camera is in *Standby* status, by calculating to the preset frame rate and the preset shutter aperture. So for example, if 30 fps and 90° shutter angle are selected, the resulting exposure time will be 1/120 sec. In toggling between FIXED and FILM exposure time, you will see a difference in the image brightness.
A practical use of the option FILM is the "video visualization" of motion blur and stroboscopic effect that will be recorded on film.

HOW TO PREVIEW MOTION BLUR OR STROBOSCOPIC EFFECT

When a fast moving object is filmed with a slow frame rate and a wide open shutter angle, the object will appear blurred on film. This is called motion blur. The more motion blur will affect the picture, the less the stroboscopic effect will be perceptible. The amount of motion blur or stroboscopic effect generated by the combination of fps, shutter angle, camera movement and object movement can be previewed with the ARRICAM Video Assist System.

- Remove the magazine from the camera to save film.
- In the VIDEO CONFIG Sub-menu, set FLICKERFREE to ON.
- In the VIDEO CONFIG Sub-menu, set EXPOS. TIME to FILM.
- Exit the On Screen menu.
- *RUN* the camera.

Now you see a close approximation of the motion blur or the stroboscopic effect that will be exposed on film. Varying degrees of motion blur can be achieved by changing camera speed, shutter angle, lighting contrast and the speed with which objects move through the image. Motion blur is most visible at slow camera speeds and at wide open shutter angles (try for instance 6 fps and 180°). Stroboscopic effect is most visible when the shutter angle is narrow (between 45° and 11,25°) and the object and/or the camera is/are moving fast.

MAIN MENU VIDEO CONFIG LINE INTERP.

```
–> LINE INTERP.  = ON
                 = OFF
```

In order to enhance the quality of the Video Assist picture, you may virtually double the vertical resolution in adding so called interpolated lines.

MAIN MENU VIDEO CONFIG Y/C (SVHS) DATA

```
–> Y/C (SVHS) DATA  = ON
                    = OFF
```

By selecting ON, the video image supplied by the Y/C (S-VHS) connector will include the data information.

MAIN MENU VIDEO CONFIG MINI MON. DATA

```
–> MINI MON. DATA  = ON
                   = OFF
```

By selecting ON, the video image supplied by the On Board Monitor connector will include the data information.

MAIN MENU *VIDEO CONFIG* *VID SYNC*

```
–> VID SYNC  = EXT (NOT TC)
             = TC
```

With this menu, the reference used to synchronize the Video Assist can be selected.

Notice

Without selecting CAMERA SYNCED ON (VID, TC), this synchronization is only related to the Video Assist, not to that of the camera! Therefore, the external sync signal must be fed in the Video Assist connector and not into the Speed Control Box.

While selecting EXT, the Video Assist will be synchronized to an external signal e.g. video or clock fed in the EXT. SYNC IN BNC connector. The green LED located next to the connector will light up to indicate that the incoming synchronization signal is OK.
If EXT is selected, either a standard video composite or a TTL (0 and 5 V) signal should be fed in the EXT SYNC IN connector.
The range of frequencies is 25 or 50 Hz for the PAL standard and 30 or 60 Hz for the NTSC standard.
A divergence smaller than ± 0.1% is tolerated. The input impedance will automatically switch between 10 K Ω for TTL and 75 Ω for video signals.
If TC is selected, the reference used to synchronize the Video Assist is generated by the In-camera Slate Box (ISB). Therefore this box must be mounted on the camera and the switch set to *ON* (TC mode). If no ISB is mounted or if the switch is not set to TC mode, this option will not appear on the OSD.



Caution!

If no usable external signal is fed to the EXT. SYNC IN connector, the Video Assist will run on its own internal oscillator.

The LED next to the connector will show by lighting green if the signal is suitable. The use of the ARRI Pick-up Unit in connection with the Video Assist connector is not possible.

MAIN MENU VIDEO CONFIG CAMERA SYNCED

```
–> CAMERA SYNCED  = OFF
                  = VID
                  = TC
```

With this Sub-menu, the synchronization reference of the film camera can be selected.
OFF means that the reference signal is provided by the film camera's own quartz crystal generator.
VID means that the film camera will use the video signal for synchronization.
By selecting TC, the film camera will be synchronized with the time-code generated in the In-camera Slate Box.



Caution!

TC selection is only possible when an In-camera Slate Box is connected.

Whenever the Video Assist is switched ON, the CAMERA SYNCED function is always set to OFF in order to avoid wrong speed.

MAIN MENU VIDEO CONFIG PHASE 0 – 356

–> PHASE 0 – 356 = 0.0

When VID is selected in the CAMERA SYNCED Sub-menu, the next menu level PHASE 0 – 356 allows to adjust the phase between the external sync signal and the film camera. By turning the dial, the phase can be adjusted with increments of 3.6° in a range 0° to 356.4°.

MAIN MENU FORMAT MARKING

–> FORMAT MARKING

The FORMAT MARKING Sub-menu allows to design and insert one or two sets of frame lines – either individually or simultaneously – into the Video Assist image. As well as the following already programmed and named aspect ratios, the Sub-menu allows the design of a further twelve frames which can be labelled individually.

FORMAT No.	NAME	ASPECT RATIO
1	TV 4:3	1:1.333
2	TV 16:9	1:1.*777*
3	1.85	1:1.85
4	2.35	1:2.35

Even with the four listed frames, their sizes, their brightness and their positions on the TV screen can be adjusted. The positioning allows precise lining up the electronic frames with the Ground Glass Format Markings.

Notice

If the electronic Format Markings are not parallel to the Ground Glass Format Markings, readjust the CCD chip with the Adjusting screws as explained on

page 173. Be aware that first the Ground Glass Format Markings must be positioned on the TV monitor by means of the CCD chip adjustment before positioning the generated frame lines. It is recommended to point the film camera towards a plain, bright surface and to turn OFF the Frameglow so that the Format Markings on the Ground Glass are clearly visible.

Furthermore, the appearance of the surrounding area of one of the selected frames can be adjusted accordingly to the users needs.

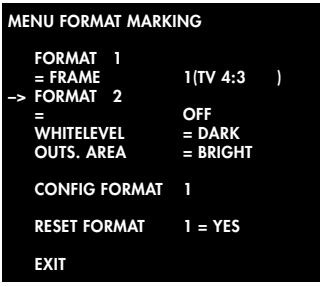

The following explanations are valid for both FORMATs and for all FRAMEs

MAIN MENU *MENU FORMAT MARKING*



While FRAME is activated and the dial turned, all the preset configurations related to this selected FORMAT will appear cyclical.
OFF will appear at the end of the list; it can be activated if no frame saved under the selected FORMAT is to be inserted.

MAIN MENU *MENU FORMAT MARKING*

```
–> WHITELEVEL = DARK
               = MEDIUM
               = BRIGHT
```

While WHITELEVEL is activated, the brightness of the frame lines can be adjusted.

MAIN MENU
MENU FORMAT MARKING

```
–> OUTS. AREA = BLACK
               = DARK
               = BRIGHT
               = VIDEO
```

While OUTS. AREA is activated, the brightness of the surrounding of the selected frame can be adjusted. While selecting VIDEO, the video image will appear accordingly to the settings bright or dark. If BLACK is selected, the surrounding will show no video images but only a neutral black surface.

Notice

This function is only available if only FORMAT 1 or FORMAT 2 is activated. No darkening function is available if there is no FORMAT Marking or if two FORMAT Markings are switched ON.

MAIN MENU
MENU FORMAT MARKING
CONFIG FORMAT

```
MENU CONFIG FORMAT 1

   NAME  =  1(TV 4:3     )

   MOVE LINES
            ALL
   ->       HORIZONTAL
            VERTICAL
            LEFT
            RIGHT
            TOP
            BOTTOM

   EXIT
```

The Sub-menu CONFIG FORMAT 1 (or 2) allows the design and labelling of a frame.
While NAME is activated, it is possible to select the already displayed name, to clear it and to set a new one. A cursor will indicate where characters can be placed.
While ALL is activated, turning the dial will either increase or decrease the size of the frame.
While HORIZONTAL or VERTICAL is activated, the whole frame can be positioned.

MAIN MENU
MENU FORMAT MARKING
CONFIG FORMAT

```
   FORMAT 1
-> = FRAME 1       (TV 4:3     )
```

Beside the possibility to change the size and position of a frame, each line (LEFT, RIGHT, TOP, BOTTOM) can be positioned individually. How to write a CONFIG NAME is described on page 207.

MAIN MENU
MENU FORMAT MARKING
CONFIG FORMAT



While RESET FORMAT is activated, the actual frame design can be reset to the factory default setting. While selecting UNDO, the last changes will be deleted and the previous setting activated.
UNDO is only available when the OSD has not been left before.

MAIN MENU *COMPARE/STORE*



The Video Assist allows the storage of one image in its own memory (the stored image) and to compare it with the image currently displayed (the live image). The stored image will remain in the memory as long as the Video Assist is powered and obviously as long as it is not replaced by a new image.



Three options are provided in the VIEW MODE:

LIVE	the live image is shown on the video monitor
STORED	the stored image is shown on the video monitor
COMPARE	the live and the stored image are shown in rapid alternation on the video monitor.

Notice

- *Whenever the Video Assist is turned ON, the "live" image is displayed.*
- *It is always possible, the dial by pushing for 1 sec., to store an image, even though the OSD is not activated. Therefore it is not necessary to enter the menu for storring an image.*
- *When showing the two images simultaneously, the Video Assist will interlace the pictures. This option offers the possibility to compare both images but a moiré effect can occur in certain situations.*

MAIN MENU  *COMPARE/STORE*

–> STORE IMAGE – STORE
DONE

While the menu-cursor points towards STORE, pushing the dial briefly will store the actual image and DONE will appear.

MAIN MENU  *COMPARE/STORE*

–> CLEAR IMAGE

While the menu-cursor points towards CLEAR, pushing the dial briefly will delete the stored image.

MAIN MENU *TEXT INSERTER*

```
–> TEXT INSERTER
```

The Video Assist enables the display of a number of windows containing assorted data on the video monitor. In each window, the size and appearance of the data can be set. The position of each window can also be individually adjusted.

```
MENU TEXT INSERTER

–> SYSTEM/LDS/STATUS
   TIME CODE
   TC USER BITS
   USER TEXT LINE
   PULL DOWN

   WHITELEVEL        =
    BRIGHT
   INVERS            =
    OFF
   SET TO DEF.       =
    NO
```

While VERT: FINE POSITION is activated, all visible data can be precisely positioned vertically.

MAIN MENU *TEXT INSERTER* *SYSTEM/LDS/STATUS*

```
SYSTEM LINE    =   OFF
               =   ON
LDS LINE       =   OFF
               =   ON
STATUS LINE    =   OFF
               =   ON

VERTICAL POSITION

BACKGRD.       =   BLACK/WHITE
               =   VIDEO

FILM COUNTER   =   REMAIN
               =   FOOTAGE
               =   TAKE
               =   OFF
EXIT
```

While one of the three options has been activated, you may, by turning and pushing the dial, choose if the selected line should be inserted on the video screen or not. Within the three windows, the following data will appear:

Examples of displayed data

SYSTEM LINE - filter in the gate
- movement open

LDS LINE - actual iris
- actual focal
- actual focus
- near (depth of field)
- far (depth of field)
or "no lens"

STATUS LINE - actual voltage of the power supply
- camera status
(RUN, STAND BY, NOT READY)
- shooting direction *(FWD, REV)*
- actual/preset fps
- actual shutter opening
- film length (remain, exposed, take)

While all three lines are selected and an In-camera Slate Box is activated, the slate data will appear for a few seconds in these lines at the beginning and end of each take. Time-code and userbits have their own individual windows.

The three lines labelled SYSTEM, LDS and STATUS are parts of one block. While one of the lines is activated, the entire block will be moved by turning the dial at once.

Video Assist data – markings display fig.5/23

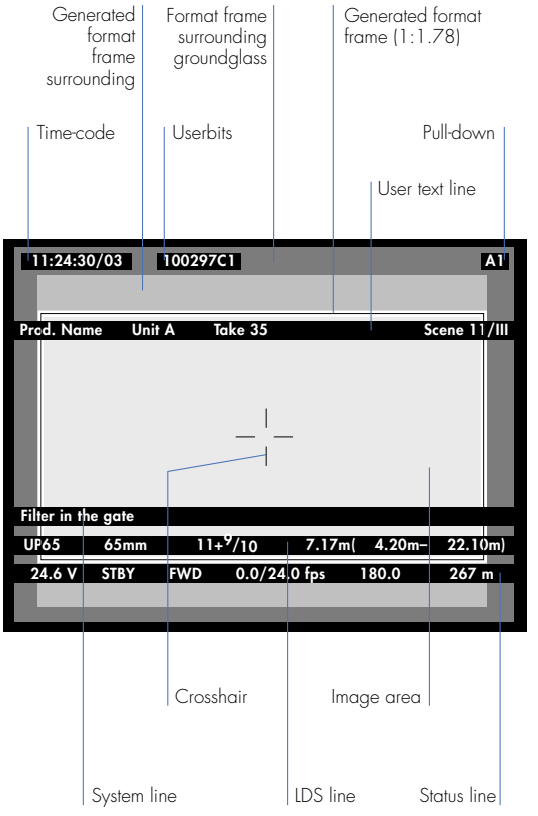

While BACKGRD is activated, either the video image or a box can be selected. The background box will be black or white depending if the INVERSE option has been selected *OFF* or *ON*.
While one of the windows is activated, e.g. the SYSTEM LINE, its background colour can be switched between black or white.
In the STATUS LINE, a FILM COUNTER will display either REMAIN (raw stock length), FOOTAGE (exposed film length), TAKE (length of the last take) or OFF (no data are shown). Depending on the preset unit on the magazine, either "meters" or "feet" will be shown. If the counter is set to TAKE, also the amount of frames can be displayed.

MAIN MENU → *TEXT INSERTER*



TIME CODE

The time-code (TC) is the identification of a video image in relation to the time of its generation. To create a time-code, the In-camera Slate Box electronics must be set with a clock.
If no In-camera Slate Box is connected to the camera, or if the ISB switch is not set to TC, this option will not be shown on the OSD.

Caution!
It is recommended to check the requirements of all facilities involved in post-production prior to shooting.

The ARRICAM Video Assist can insert the film camera's time-code into the video image to create a direct link to the post-production. It is possible to insert the time-code, which is related to the film camera speed e.g. 24 fps or to a time-code which counts according to the type of Video Assist used: 25 full video frames per sec. with PAL or 30 full video frames per sec. with NTSC.

Several Video Assists can be either synchronized or individually set by means of the same clock. If a number of Video Assists are synchronized, one will be called the master and the other ones slaves. So, e.g., one of the ARRICAM Cameras or the sound recorder can be the master – the other cameras will be slaved. If the ARRICAM Cameras are equipped with In-camera Slate Boxes, no permanent cable connection is necessary (to maintain synchronization) after having set the internal clocks – see page 319, chapter 8 – In-camera Slate System. The time-code identification numbers contain two digits for the hours, two digits for the minutes, two digits for the seconds and two digits for the frames. The last two numbers are provided by a counter.

THE FRAME COUNTER

This counter can be set to count either the FILM or the VIDEO frames. Depending on the preset fps, the FILM counter will count from 0 to the maximal frame rate; e.g. if the camera is set to 35 fps, it will count from 0 to 34. When it is set to VIDEO, the counter will display the amount of video fields.

Very often the camera is set to *RUN* at a different frame rate than the video system. In areas with NTSC video standard for example, the film camera would *RUN* at 24 fps whereas the video system works with 30 full

video frames per sec. In order to adapt it to the specific needs, there are two different time-code formats possible. To have the time-code related to the film camera, select the mode FRAME COUNTER FILM, which is often referred to as "film related time-code". In this mode, the frame counter of the time-code (the last two digits of the TC display) is increased by 1 if the film is advanced by one frame e.g. 24 times in a sec. at 24 fps. By this, it is easy to identify one particular film frame by looking at the video image. On the other hand, this mode will create an unusual time-code count because some video images are duplicated to cope with the different frame rates of the video and the film camera. These repeated images will get duplicated time-code words which will create error messages on some time-code readers.
To relate the time-code count to the video system, select mode FRAME COUNTER VIDEO. This is often referred to as "video related time-code". Every full video frame will advance the time-code by e.g. 25 times a sec. in PAL or 30 times a sec. in NTSC. By this the ARRICAM Video Assist creates a standard time-code. On the other hand, it is more difficult to get the link back to the time-code, whose "start cue" and "end cue" was exposed on film by the ISB. To get a reliable relation, it is necessary to utilize the Pull-down – see page 202 – or White-line flag information – see page 205.

At every full sec., both time-code counts are identical!

Notice

The FRAME COUNTER FILM is identified with a slash: **11:24:30/03**

The FRAME COUNTER VIDEO is identified with a colon: **11:24:30:03**

While the camera is not *RUNNING* or when the time-code Generator built into the connected ISB

is not working properly, two symbols will appear instead of the frame counter. **11:24:30/**

Caution!

- *When no In-camera Slate Box is installed on the camera, no TC window is available.*
- Time-code is only valid when the option FLICKERFREE is set to ON! – see page 185.

THE USERBITS

As well as the eight digits of the time-code, a further eight digits can be used for additional information. These eight digits are called userbits (UB) because the user can define the kind of displayed information. Userbits can be entered in the system either with a handheld PC/laptop or by means of a time-code generator. Userbits can contain the numbers 0–9 and the letters A–F.

Example:

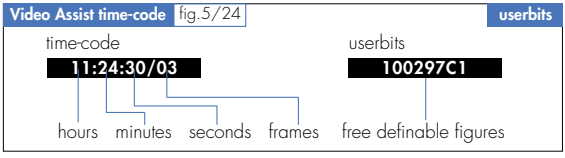

THE PULL-DOWN

The Video Assist can generate information on whether the current video image corresponds with a new film frame or it is a repeated video image. The pull-down information displays it in man readable form.
All Video Assists are based either on PAL or NTSC video standard, with a fixed video frequency of either 25 full video frames per second with PAL or

29.97 full video frames per sec. with NTSC. The frame rate of the film camera on the other hand can be selected over a wide range. At every film frame rate which is different from the video frequency, the Video Assist has to add repeated video fields (1 field is 1/2 video frame) to compensate for the different frame rate. In practice the most important case is a film camera frame rate of 23.976 fps and a NTSC Video Assist. This creates a situation described in the fig 5/25.
From the first film frame, two video fields are derived, the second film frame, three video fields are derived, from the next film frame, two video fields and so on.
The pull-down information is created as follows:
Every time, the video field corresponds with a new film frame, the letter will change either from A to B to A and the number will be set to 1. As long as no new film frame is taken, the video fields are counted, beginning from 1. Consequently A2 is the first repetition of A1, B2 would be the first repetition of B1, B3 would be the second repetition. In spite of the fact that the name pull-down comes from the working practice in the NTSC system, where on a telecine the film is *RUNNING* on 23.976 fps and gets converted to 29.97 fps, the definition of pull-down information on the Video Assist can also be applied to PAL and to film frame rates other than 23.976 fps.
Like all man readable information, the data can be inserted as a window on the monitor.

Notice

Pull-down information is only inserted when time-code is actually exposed on film. If there is no time-code exposing, for example because the film camera is not RUNNING on a time-code speed, only A1 will be displayed.

Pull-down diagram fig.5/25

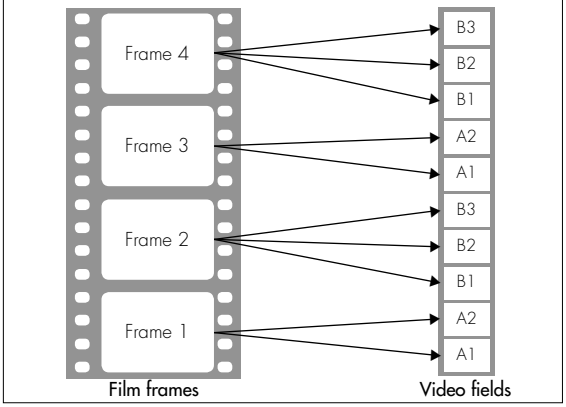

MAIN MENU *TEXT INSERTER*

–> USER TEXT LINE

While USER TEXT LINE is activated, a new line and a character-cursor **X** appear. The line has the width of the video screen.

–> EDIT TEXT

In activating EDIT TEXT, three short lines appear. By turning the dial, the cursor moves back and forward. By pushing the dial, a character appears on the position marked by the cursor. While turning the dial, you will be able to select a letter, a number or a symbol. By pushing the dial, the chosen character will be saved and the cursor will be activated again.

Notice

While writing the user text, briefly push the dial, otherwise the OSD menu will fade out.

WINDOWS ADJUSTMENTS

Following settings and adjustments can be done for most Sub-menu windows and characters:

- While one window is activated, you may select *ON* to display it or *OFF* to fade it out.
- While either HORIZONTAL or VERTICAL POSITION is activated, the position of the windows can be adjusted accordingly. By activating VERT. FINE POSITION a precisely vertical positioning of all windows is possible.
- Most characters or windows can be set SMALL, MEDIUM or LARGE when SIZE is activated.
- The characters or windows can be shown with either black on white background or reverse.
- The brightness of the white background or digits can be adjusted when WHITE LEVEL is activated.

MAIN MENU *VITC/WHITELINE*

–> VITC/WHITELINE

VITC

Time-code information can be man and machine readable – the first one is the TC window as described on page 199, the other takes the form of LTC. (Linear Time-code) or VITC. (Vertical Interval Time-code). The Video Assist can convert the visible TC into a VITC and place it in non active video lines.

WHITELINE

The Video Assist can generate information on whether the current video image corresponds with a new film frame or whether it is a repeated video image. The WHITELINE flag displays this in machine readable form.

Notice

The time-code that is used (film related TC or video related TC) depends on the settings of the line FRAME COUNTER in the Sub-menu TIME CODE – see page 200.

VITC and WHITELINE are only outputted if the time-code is actually exposed on film. This happens only when the camera is equipped with the In-camera Slate Box and the camera RUNS at a TC speed.

The WHITELINE has priority over the VITC lines. If the same line is selected for WHITELINE as well as for VITC, WHITELINE will appear.

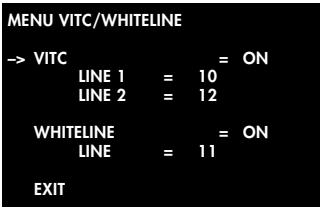

Both lines, the VITC and the WHITELINE, can be individually activated or deactivated by setting *ON* or *OFF* in the Sub-menu.
Both lines can be positioned vertically by turning the dial when the related LINE is activated.
The insertion of the VITC can be a single line or multiple lines between line 6 and 22. If the same position is selected for LINE 1 and LINE 2, the insertion will be a single line, otherwise multiple lines.
The insertion of the single WHITELINE must be chosen between line 6 and 22. Avoid placing the WHITELINE on the same position as the VITC line(s).

```
--> CONFIG SET
```

By pushing the dial, the option to (re)name a configuration is given. By turning the dial, you will cycle the six names already saved in the memory. As soon as a name appears that should be changed, you may edit it by activating EDIT NAME.

```
SET NAME INDIVIDUAL
NAME = 4 (TEST      )
         >  x    <
```

The name can be deleted (CLEAR NAME) and the selected configuration can be put to TO DEFAULT. Whilst activated, you will have three options to chose from: YES, NO or UNDO.
Furthermore, if you would like to erase a setting and replace it by the default setting, you will be asked if you are sure about it.
The TO DEFAULT configuration cannot be renamed.
In choosing SET LIKE, you can assign a previous setting to the actual configuration.

```
MENU CONFIG SET

  SW VERSION    =   1.11
  CONFIG        =   2(USR2     )

  EDIT NAME
  CLEAR NAME    =   UNDO

  SET LIKE      (NO            )

  TO DEFAULT    =   NO

  EXIT
```



–> EXIT

You may select EXIT at the bottom of each menu level (Main or Sub-menus) to leave the actual level and to access one menu level higher. While being in the Main Menu, you will close the OSD by activating EXIT.

CHECKING THE CONFIGURATION

While the OSD menu is OFF and the ON/OFF/CHECK/HIDE MENU switch is pressed all the way down, a summary of the actual configuration, of the VIDEO STATUS, will be screened.

EXP	Video exposure mode
FLCK	Flickerfree
FORMAT 1	Frame 1 aspect ratio
FORMAT 2	Frame 2 aspect ratio
GAIN	Manual CG or Automatic CG
LDS	LDS Line
LIP	Line Interpolation
MODE	Compare LIVE or STORE
PD	Pull-down
STATUS	Status Line
SYS. MSG	System Line
TC	Time-code
UB	Userbits
UT	User Text
VITC	Vertical Interval Time-code
WB	White Balance
WL	Whiteline

Example:

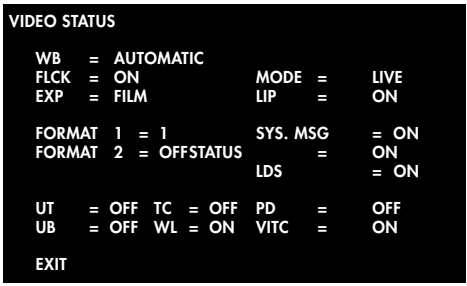

Caution!
The OSD will be switched OFF automatically when the camera starts UP.

THE ON BOARD VIDEO MONITORS

ARRI provides three ARRI LCD Colour Monitors which can be mounted on and connected to both Video Assists. The 2" On Board Monitor is available in either NTSC or PAL standard. Be sure to have the correct one before leaving the rental house. The 6.6" On Board Monitor operates both video standards.

Caution!
ARRICAM On Board Monitors are not compatible with the MOVIECAM Video Assist.

The 2" ON BOARD VIDEO MONITOR

The 2" On Board Monitor is mounted on a ball joint. This attachment, fixed on a small bracket, can be mounted on several Accessory shoes on both cameras where it is tightened by a screw. The tension of the ball joint can be regulated by turning the ring. Turn the On

Board Monitor *ON* and *OFF* with the ON/OFF switch. Colour saturation, colour hue (NTSC only), brightness and contrast can be adjusted with four rotary knobs.

2" On Board Monitor fig.5/26

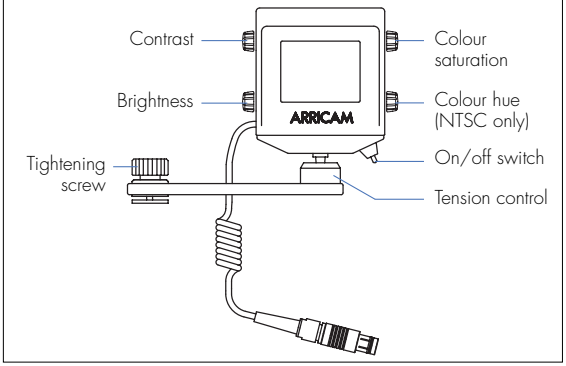

Caution!
This 2" Video Monitor is primarily concieved for shooting Standard 35 format. While shooting in a Super 35 format smalll portions of the image are not visible on the left and right.

The 6.6" VIDEO ON BOARD MONITOR

The 6.6" On Board Monitor is mounted on an extension arm. This fixture can be mounted on several Accessory shoes on both cameras and is capable of hanging the On Board Monitor upside down. In this case, push the UPSIDE DOWN button to flip the image.

Caution!
Because of the possible extension of the articulated arm, secure firmly the two tightening screws.

6.6" On Board Monitor fig.5/27

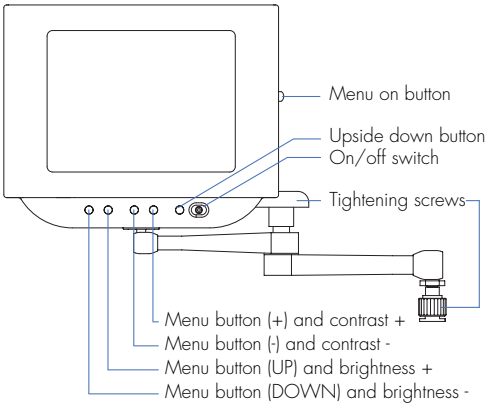

CONNECTING THE ON BOARD MONITORS

Be sure that the 2" On Board Monitor has the same standard (PAL, NTSC) as the Video Assist. The 6.6" On Board Monitor automatically detects and switches between PAL and NTSC standards.

2" On Board Monitor, mounting fig.5/28 **Studio Video Assist**

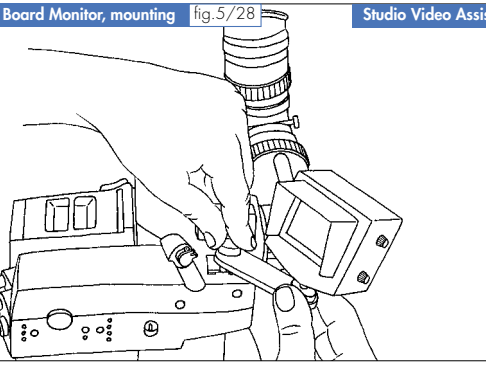

A collapsible Sunshade can be attached with velcro to the 6.6" Video Monitor.

6.6" On Board Monitor, connecting fig.5/29 **Studio Video Assist**

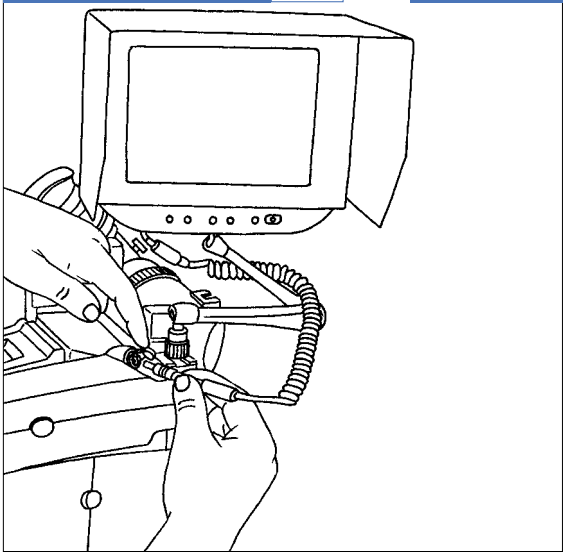

2" On Board Monitor, mounting fig.5/30 **Lite Video Assist**

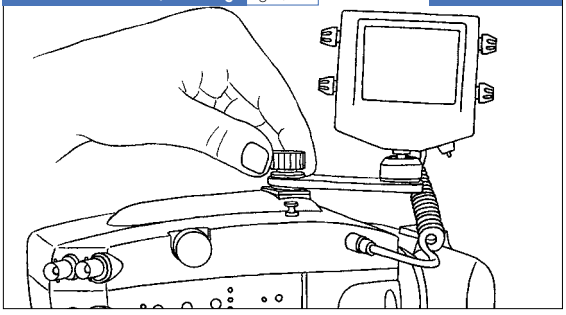

6.6" On Board Monitor, mounting fig.5/31 Lite Video Assist

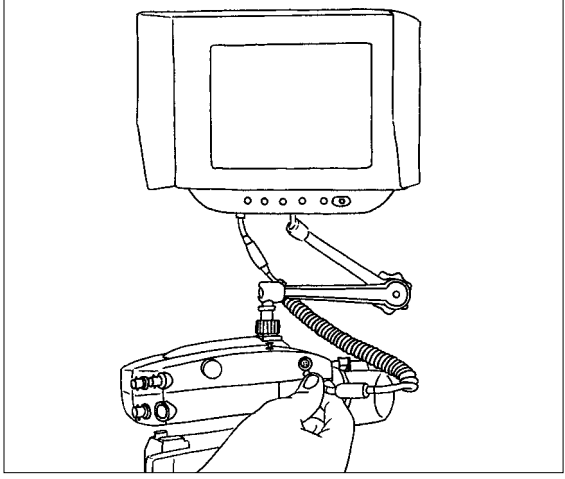

Caution!

Be sure that the camera is not powered when connecting or disconnecting a Video Monitor.

Notice

While powering up a On Board Monitor, the image on an external monitor might disappear briefly.

CONTROL MENU OF THE 6.6" ON BOARD MONITOR

Preliminary remark
Beside the menu of the ARRICAM Video Assist, the 6.6" On Board Monitor's adjustments can also be monitored by means of its own menu displayed on the screen (OSD).

After the On Board Monitor is powered up, push the **menu** button on the right side to open the On Screen Display (OSD).
To leave the OSD, wait for it to time out. The time can be set in the Menu **utilities**/OSD **time out**.
The OSD allows the configuration of the video image on the On Board Monitor. This local configuration will not influence the images on other video screens. The menu is structured in two levels: on the left side the Main Menu and on the right the Sub-menus.
Four buttons make it easy to navigate through the menu and to set all the parameters. The principle of navigation is very simple: first select and confirm one of the four options in the Main Menu by pushing the **contrast+** and **contrast-** buttons. To change into the related Sub–menu, press the **menu** button. After having selected and activated one of the parameters to be changed, the desired setting can be done by pushing the **brightness+** and **brightness-** buttons. The activated menu or parameter will be highlighted.
By leaving the Main Menu, a Sub-menu or the OSD, all changes will be saved and activated. This happens also when the OSD turns *OFF* automatically as programmed in **time out** in the Sub-menu **utilities**.

Notice

By means of the four buttons, the brightness and the contrast can also be adjusted directly – entering the OSD menu is therefore not necessary.

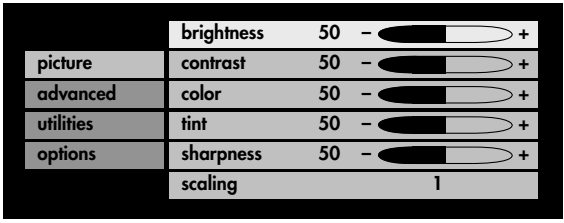

In the *picture* Main Menu:

Being in the Sub-menus ***brightness, contrast, color*** *(saturation),* ***tint*** *(colour hue)* and ***sharpness*** you may adjust the parameters in a range from 0 to 100%. The default is 50%.

The Sub-menu ***scaling*** enables the selection between several default aspect ratios: 1 = 1:1.333, 2 = 1:1.777



In the *advanced* menu:

The Sub-menu **gamma** allows following adjustments: In selecting **linear**, the rendition of the video picture will maintain the characteristics of the signal delivered by the Video Assist. The displayed option **crt** is not valid for this monitor.

The Sub-menu **color temp** enables the following adjustments: By selecting **5000**, the whites will look "warmer" than by selecting a higher colour temperature. When **user** is selected in the **color temp** Sub-menu, the amount of each primary colour can be set in a range from 0 to 100%.

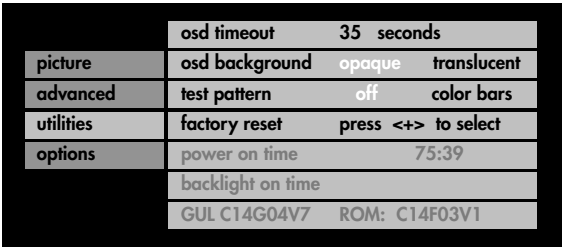

In the **utilities** menu

After the last change, the OSD will stay visible for the duration preset here. After the OSD times out, all changes will automatically be saved.

Depending on the **osd background** setting, the data will appear in a box or on the video image.

The Sub-menu **test pattern** switches on **color bar**s to calibrate the On Board Monitor.

By pressing "+" all settings will be replaced by factory default values.

In the Sub-menus **power on time** and **backlight on time** as well as in the last Sub-menu line, information for the Maintenance Personnel will be displayed.

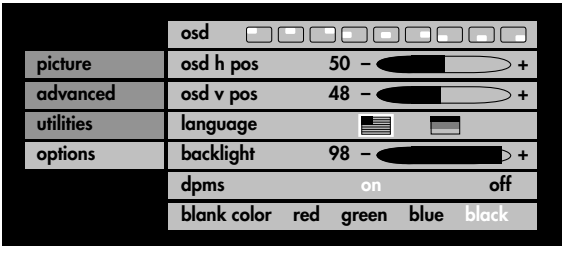

In the **option** menu

Select the position of the OSD by activating one of the icons.

The horizontal and vertical position of the OSD can

be precisely adjusted by means of these two settings.
Select the **language** of the OSD: either english or german.
Set the intensity of the screen **backlight**.
Sub-menu **dpms** is reserved for ARRICAM Maintenance Personnel.
Select the colour of the screen when no video signal is supplied to the On Board Monitor.



Caution!
*The default setting of the **backlight** is 50%. By increasing this setting, the video image will appear brighter but the power consumption will increase. Therefore you should first adjust the brightness of the image before altering the **backlight** setting.*







THE STUDIO READOUT, THE LENS DATA SYSTEM

THE LENS DATA DISPLAY

The LDD Screen – feet and inches

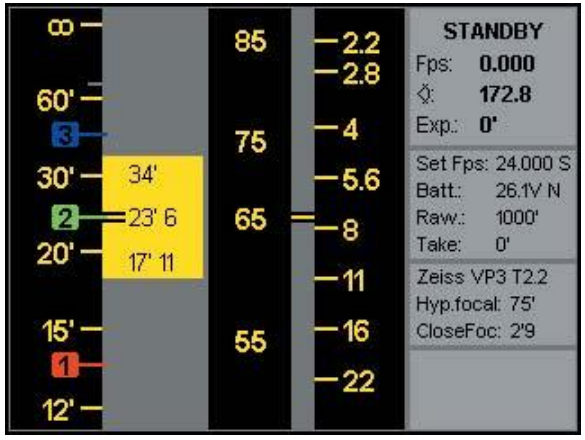

camera is stand by

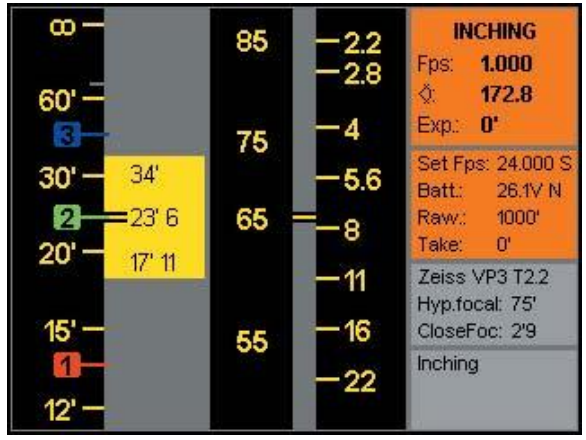

camera is inching

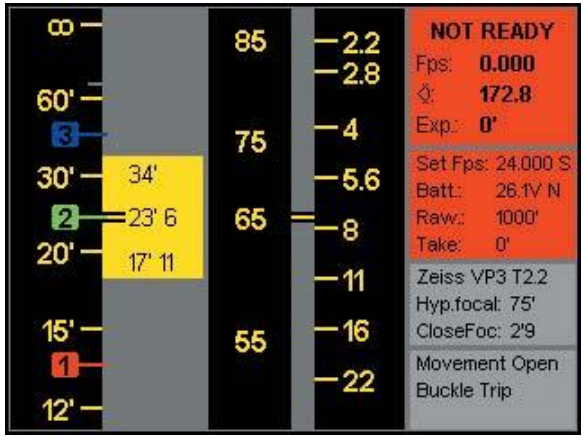

camera is not ready

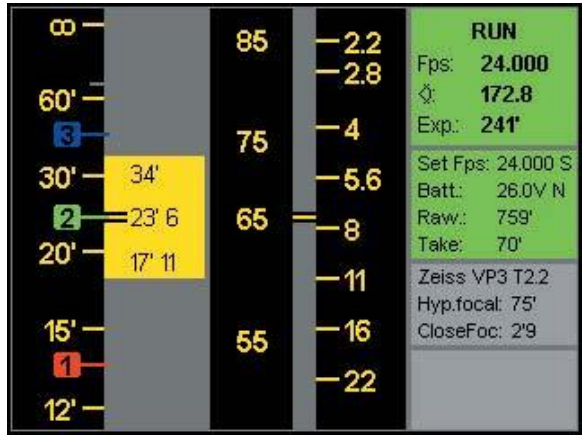

camera is running

The LDD Screen – metric

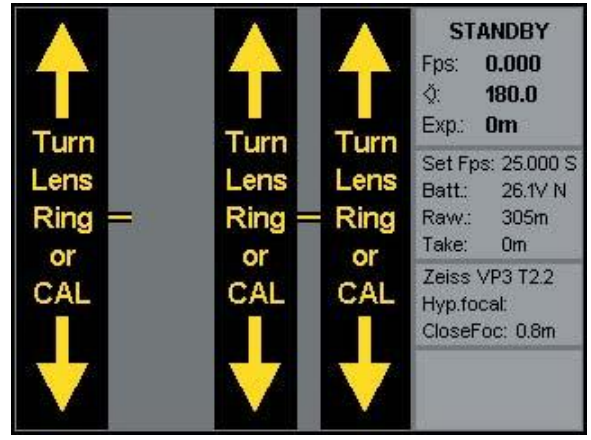

camera is stand by – Lens Data System not initiated

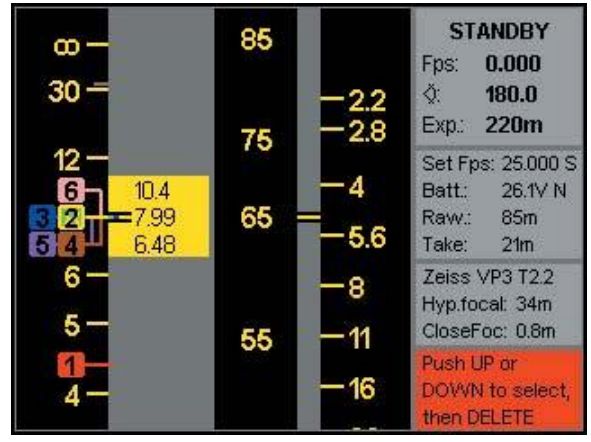

camera is stand by – focus marks setting

THE LENS DATA DISPLAY

The LDD-FP Lens/Status Screen – feet and inches

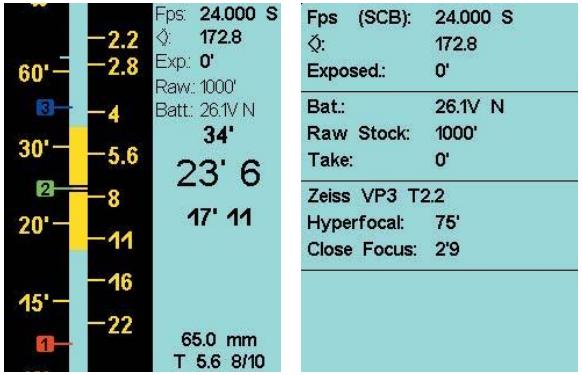

camera is stand by



camera is inching

The LDD-FP Lens/Status Screen – metric

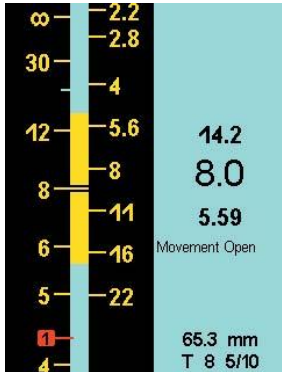

no cam status

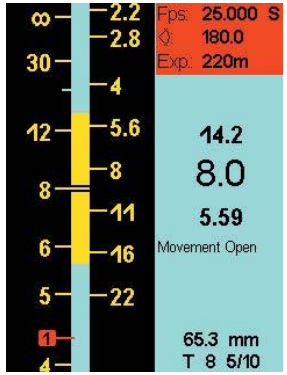

short cam status



camera is not ready



camera is running

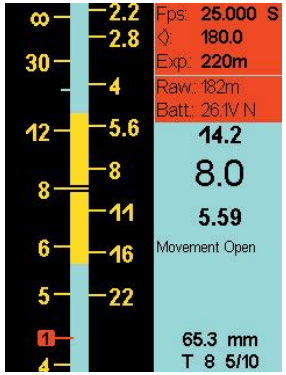

long cam status

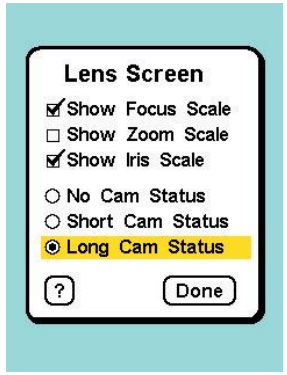

option menu

The Studio Readout

Although the Studio Readout is not a component of the viewfinder system but its mounting is only possible on top of a Studio Viewfinder.

MOUNTING THE STUDIO READOUT

After having removed – by unscrewing one 3 mm hex screw – the cover from the top of the Studio Viewfinder, place the Studio Readout on the Viewfinder and fix it firmly by tightening the screw. By placing the 3 mm metric hex wrench in the access holes, the Studio Viewfinder can be removed or fixed to the camera without having to remove the Studio Readout first.

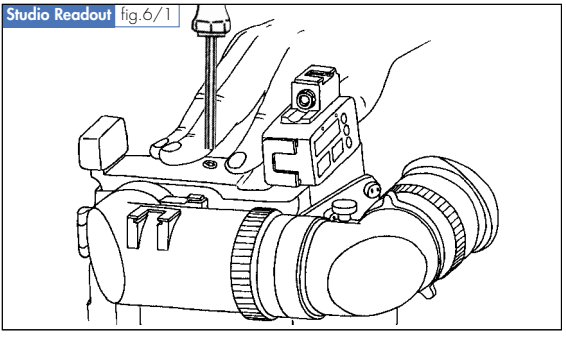

Studio Readout fig.6/1

FUNCTION OF THE STUDIO READOUT

On both sides of the Studio Readout, the FPS display as well as a RUN LED are provided. The FPS displays will either show the actual frame rate or other info – please consult the related list of messages in chapter 1 on page 44 dedicated to the FPS displays.

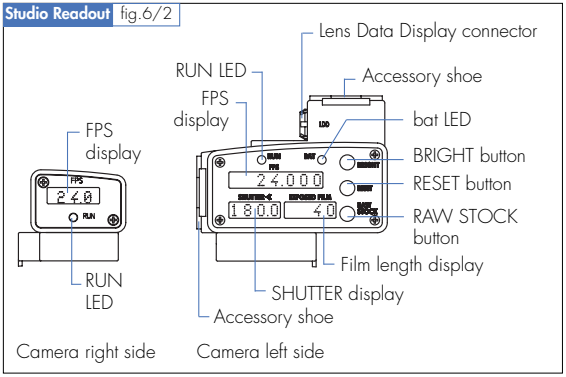

THE LEDS

G *glows green*	R *glows red*	● *off*

RUN LED

- ● while the camera is in *STAND BY* status or when the camera is not powered
- G camera is *RUNNING* at the preset frame rate
- R camera is *RUNNING UP* or *DOWN*, incl. the lap of time used for the In-camera Slate exposing, while the camera is *NOT READY*

BAT LED

- ● while the camera is in *STAND BY* status or when the camera is not powered
- R when the battery supplies less than e.g. 20.6 V

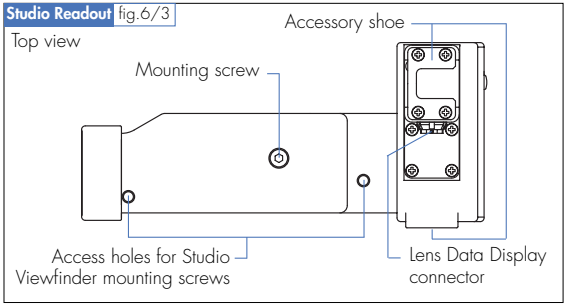

On the left side only, further displays also show the actual shutter opening angle and the exposed film length.
While the button RAW STOCK is pressed, the amount of raw stock will be displayed instead of the exposed film length. When pushing the RESET button (it has the identical function as the one located on the Camera Control Panels, except the Studio Standard Panel) for more than three seconds, the exposed film counter will be reset and the display will show **0000**.
By pushing the BRIGHT button the luminosity of all displays will be changed in the following order: dim brightness, medium brightness, maximum brightness.

Notice

The selected brightness level will be memorised in the camera and will be used if, at least, any of the following components is used: the Studio Readout, the Speed Control Box, the Manual Control Box or the Timing Shift Box. If none of these components is used, the brightness of the camera displays will automatically be set on the maximum level.

The Lens Data System (LDS)

Based on a concept by Fritz Gabriel Bauer, the Lens Data System was revealed to the industry at the Cinec exhibition 2000. Then it was considered to be an absolute technical novelty in the world of cinematography. The system is based on the transmission of parameters of the lens to the movie camera and vice versa.

FUNCTIONS OF THE LENS DATA SYSTEM

The main function of the Lens Data System is to show on one of the Lens Data Displays all actual parameters set on the lens as well as on the camera. The Lens Data Display – Focus Puller (LDD-FP) is smaller then the LDD in size but similar in function. Perfect replicas of the lens barrels – the focal length (fixed or variable), the iris aperture and the focus distance will accurately show the actual settings. Furthermore, not only does the LDS automatically calculate and display the actual depth of field graphically as well as with figures, it also allows the camera assistant to place and store focus marks on the focus scale. In addition to monitoring the lens settings, several camera parameters such as the frame rate, the shutter opening, the amount of exposed film and the raw stock as well as the camera and battery status (RUN, Standby, Voltage, etc.), the LDS will help the focus puller. By means of the buttons located on the left side of the Displays, several functions like setting the unit of measurement (meter/feet) or placing Marks on the focus scale can be done. Last but not least, a new Focus Tracking option allows the electronic measurement and display focus distances and also remote control the lens motors so the lens will automatically focus on the subject. (See Focus Tracking section at the end of this chapter).

Remark: this option is not intended to be an auto-focus and certainly does not replace the traditional focus puller's job. This option is just a new tool intended to help the professional camera assistant in certain situations.

LDD Screen fig.6/4

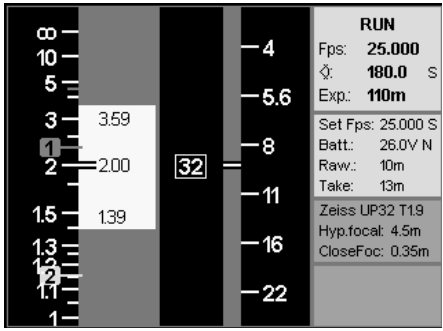

LDD-FP Lens Screen fig.6/5

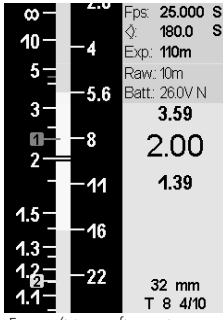

Focus/iris configuration

LDD-FP Status Screen fig.6/6

Fps (SCB):	25.000
(SCB):	180.0
Exposed.:	110m
Bat.:	26.0V N
Raw Stock:	10m
Take:	13m
Zeiss UP32 T1.9	
Hyperfocal:	4.5m
Close Focus:	0.35m

The modular Lens Data System is based on various components:

1. LDS Lens
2. Lens Data Box (Studio-LDB, LT-LDB)
3. Lens Data Display (LDD, LDD-FP)

1. LDS Lenses

LDS Lens fig.6/7

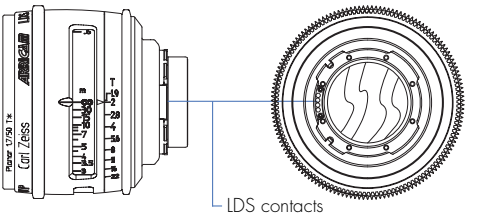

Some of the most renowned manufacturers, such as ZEISS and COOKE, produce prime and zoom lenses exclusively for the ARRICAM Cameras which allow electronic transmission of data such as the focal length, the iris aperture, the focus distance as well as other optical characteristics. In the mount of LDS labelled Objectives, a set of contacts is integrated. Because two sets of contacts are provided in the camera lens port, the LDS Lens can be mounted either in the 3 o'clock or 12 o'clock position. This enables the placement of the lens' index lines in the most convenient position for the camera crew. Suitable contacts are provided in the lens ports of all ARRICAM Cameras as well as in the ARRI 435 Advanced. Currently, the ZEISS Ultra Primes, the ZEISS Variable Primes and the COOKE S4 Lenses are available with the LDS function. More lenses, e.g. zooms from COOKE and ANGENIEUX, are in preparation.

Notice

In order to protect the LDS Lens mount – especially the sensitive contact pins – always place carefully the adequate cover on the mount, when ever the lens is not on the camera.

2. Lens Data Boxes (Studio & Lite)

The Lens Data Box is the central processing point for the signals from the Lens Control System (LCS) and from the Lens Data System (LDS). Specially designed to fit each ARRICAM body, two Lens Data Boxes are supplied. Different in size and shape but identical in function, both Boxes control lens motors, supply the Lens Data Display with information and manage the wireless connection to the ARRI LCS components, like the hand units for focus, zoom, iris and camera control. A cable connection to the hand units is possible with the ARRI WHA-2 & 3. Both ARRI CLM-1 and ARRI CLM-2 motors can be connected to the Lens Data Boxes. The CLM-1 motor must be linked to the LCS connectors and the CLM-2 motors to the three dedicated connectors labelled FOCUS, IRIS and ZOOM.

Notice

In order to use the In-camera Slate Box (ISB) with the Lite, the ISB must be fixed to the Lite Lens Data Box.

COMPATIBILITY

The Lens Data Boxes are not only equipped with connectors for using a wired remote control system, but also with a transmitter/receiver (transceiver) which enables wireless remote control function. All remote control units including the Wireless Main Unit (WMU-1) attached

with either the Wireless Remote Control (WRC-1) or with the Wireless Focus/Iris Control Unit (WFU-1) and/or the Wireless Zoom Control Unit (WZU-1) are compatible with both Lens Data Boxes. The Controlled Lens Motor (CLM-1 and CLM-2) but also most of the components of the wired Lens Control System (LCS) are also compatible.

Caution!

- *Because only one WHA-2 can be connected by cable to the Lens Data Box the simultaneous use of a second WHA-2 must be performed either wireless or via a cable connected to the Camera Accessory Connector (CAC).*
- *The ARRI LCS component Focus Iris Unit (FIU-1) is not compatible with the ARRICAM Lens Data System.*

Studio-Lens Data Box fig.6/8

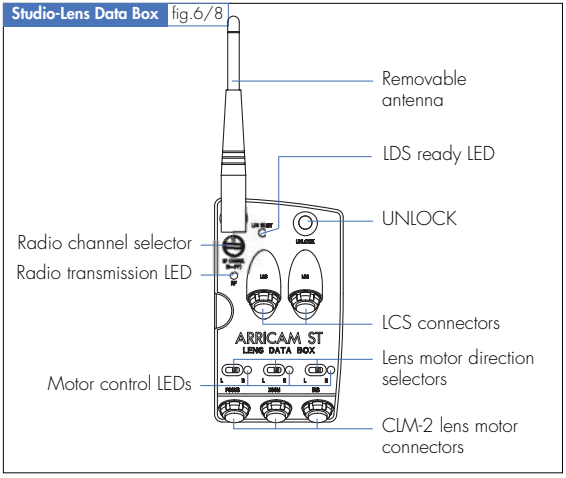

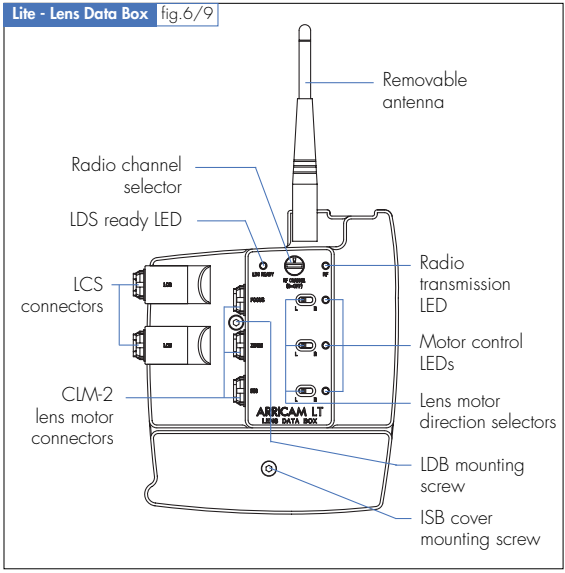

MOUNTING OF THE LENS DATA BOXES

Please note that the multiple-pin connectors on both Lens Data Boxes are mounted freely in order to facilitate the connection to the cameras.

Caution!
Like all other electronic components, be sure that the camera MAIN switch is OFF before connecting the Lens Data Box.

MOUNTING OF THE STUDIO LENS DATA BOX

To mount the Studio Lens Data B on the ARRICAM Studio, you have first to remove the protecting cover. To do this, push the release knob and slide the cover towards the front of the camera to remove it. Place the Studio Lens Data Box on the guiding assembly and slide it back until it sits firmly.

Studio Lens Data Box mounting fig.6/10

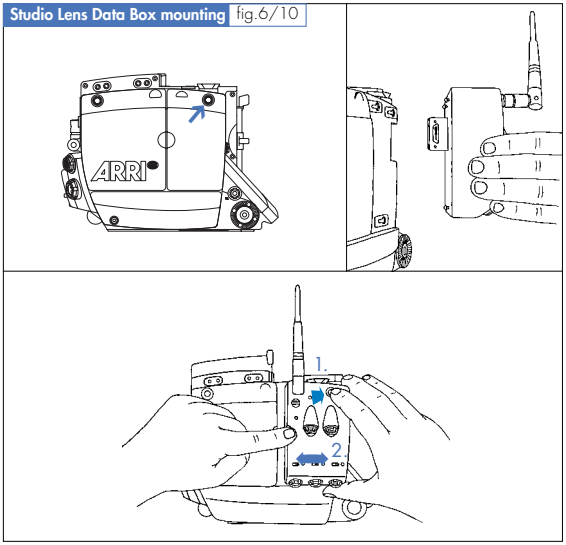

STUDIO LENS DATA BOX ADAPTER

Under some circumstances, it is preferable to mount the Studio Lens Data Box away from the Studio body. The Studio Lens Data Box Adapter enables its mounting on a support system like Sachtler Artemis or Steadicam.

The adapter consists of two mounting plates and a 1 m/3 ft Cable. The Studio Lens Data Box Camera Plate slides onto the camera instead of the Studio Lens Data Box itself. The Studio Lens Data Box Adapter Plate is connected to the Studio Lens Data Box. The cable connects the two Plates. An ARRI Dovetail Shoe can be attached to one of the three 3/8" threaded holes of the Studio Lens Data Box Adapter Plate – see chapter 9 – supports, page 351.

Studio Lens Data Box Adapter fig.6/11

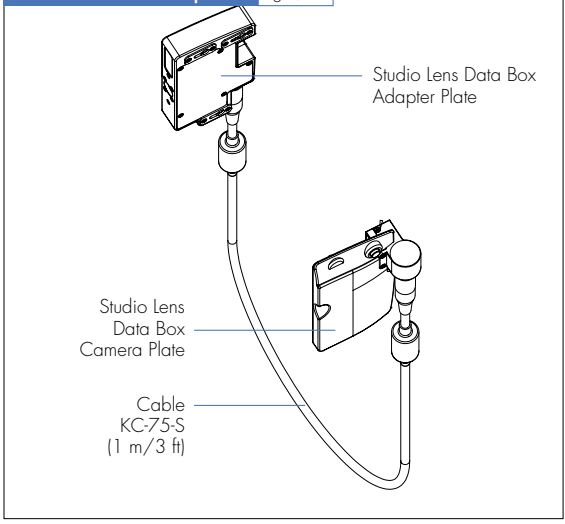

MOUNTING OF THE LITE LENS DATA BOX

Lite Lens Data Box mounting fig.6/12

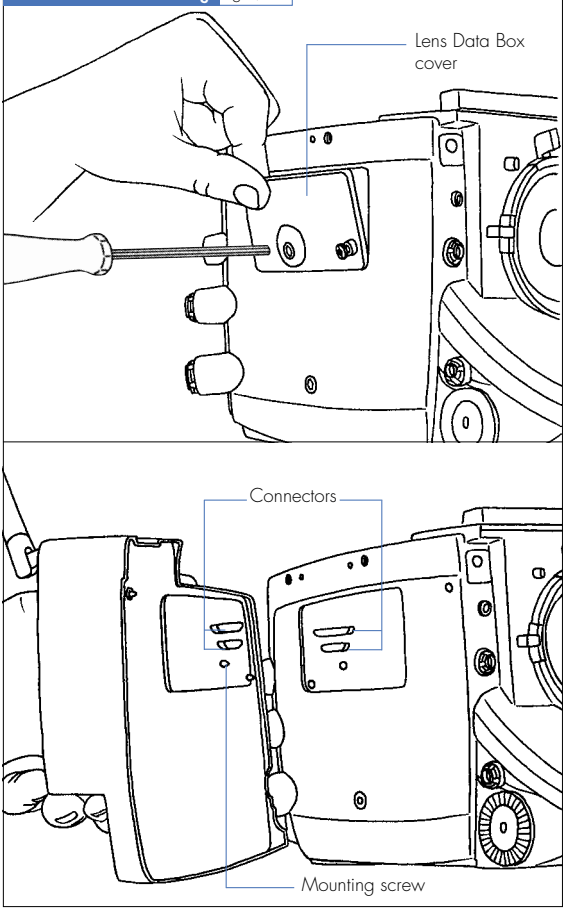

In order to mount the Lite Lens Data Box on the ARRICAM Lite, first remove the Lens Data Box Cover from the camera right side with a 3mm metric hex wrench. Now carefully place the Lite Lens Data Box on the camera, and fasten it with the mounting screw.

CONNECTORS AND CONTROL LEDS

Besides the connectors that connect with the camera both Lens Data Boxes are equipped with three sockets solely dedicated to the connection of CLM-2 motors.

Caution!
Only ARRI CLM-2 motors can be plugged in these three connectors.

Beside these three sockets, there are two connectors labelled LCS allow the connection of the CLM-1lens motors. Also one Wired Handgrip Attachment WHA-2 can be connected there via the Cables LC-M1-SP-S or LC-Z1-S.

Lens Data Box with WHA 2 fig.6/13

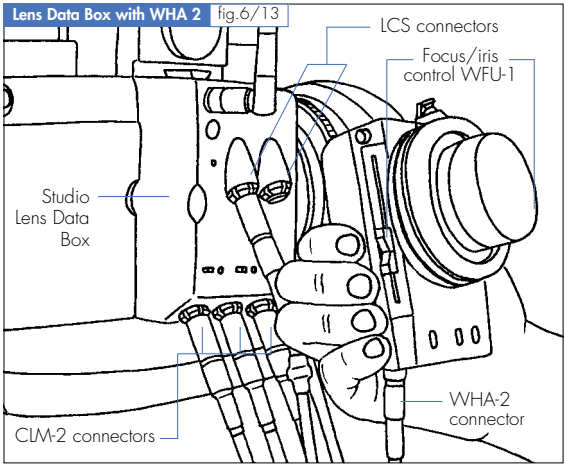

CONNECTING WIRELESS CONTOL DEVICES

In order for correct wireless operation, please note that an antenna must be installed on both transmission devices, before activating them in the following order:

1. On the Lens Data Box: set the RF CHANNEL selector to the desired channel.
2. On the camera: set the MAIN switch to ON
3. If a Lens Data Display is installed: push the ON/OFF button to activate the Display
4. Now, the RF LED on the Lens Data Box will alternately blink red/green until the transceiver initialization is done. As soon as the LED blinks green, the LDB is ready for communication.
5. **ONLY NOW**, should the WMU-1 handset be turned ON.

On the Lite Lens Data Box only there is a connector for the In-camera Slate Box (ISB). It should always be protected by the cover when the ISB is not mounted.

THE LEDS

= LED glows red	*= LED glows green*
= LED blinks red	*= LED blinks green*
= LED blinks fast red	*= LED blinks alternately red/green*
= is off (grey)	

Ready LED

Indicates that a LDS Lens has been detected and the data communication is working well.

Indicates that the LDS Lens has been recognised

but there is a problem. To locate the problem, check the system with another lens.

Focus, Zoom, Iris LEDs

Ⓖ Indicates that lens motor control is ready.

Ⓖ Indicates that one of the limits of the barrel has been reached, e.g. iris barrel is at T 22 or the focus barrel has reached infinity.

Rf LED (radio transmission)

● The RF CHANNEL selector is set to position "9" which means that the transceiver is switched OFF (or the camera is not powered).

Ⓖ Shows the initialization of the transceiver

Ⓖ The transceiver is ready

Ⓖ As soon as a remote control unit, e.g. ARRI WMU-1 is ON, the RF LED shows that the radio connection is working correctly.

Ⓡ When the RF selector has been changed while the camera is powered

Ⓡ Indicates that radio transmission is not operational

Ⓡ Indicates that RF signal interference has disturbed the correct functioning of the LDB transceiver, e.g. another Lens Data Box or Universal Motor Controller (UMC) is set to the same channel.

Caution!

The rf channel should ideally be selected on the Lens Data Box before the camera is powered ON. Slowly turning the RF CHANNEL selector while the camera is powered will cause a problem and the RF LED will light up red. In this case, switch the transceiver OFF (turn the selector quickly to "9"), then – after about 3 sec. – quickly turn the selector to the desired channel.

Notice

- *This warning will not appear when two WMUs are connected wirelessly to the Lens Data Box (same channel) in order to separately control e.g. the zoom and the focus.*
- *On the WMU-1, the LED will light up red when an unsuitable channel has been set with the RF CHANNEL selector.*

RF Channel selector

Set the RF CHANNEL selector to the same channel as that on the Wireless Main Unit (WMU). To do so, first set it to position "9" (radio power *OFF*), then to the desired channel. The following list indicates which channels are legal in the various countries.

0, 1,	USA, Canada, Mexico, New Zealand, Europe except France and Spain
2	Europe except Spain
3	USA, Canada, Mexico, New Zealand, France
4	Japan
5, 6	Australia
7	Spain
9	radio power *OFF*

If no wireless lens control is used, set the RF CHANNEL selector on the Lens Data Box to "9". This will turn the transceiver *OFF* and save power.

CONNECTING LENS MOTORS TO THE LENS DATA BOXES

Notice

As usually recommended when installing or removing electrical devices, turn the camera MAIN switch OFF before connecting or disconnecting motors and/or remote controls to/from the Lens Data Boxes.
The combined use of both types of ARRI CLM motors is possible.

ARRI CLM-1 MOTORS

Daisy chain CLM-1 motors together and connect the last in line to one of the LCS connectors on the Lens Data Box. If a CLM-1 motor is to the left of the lens, set the DIRECTION switch on the motor to L. If it is to the right, set the DIRECTION switch to R.

ARRI CLM-2 MOTORS

Connect CLM-2 motors to the FOCUS, ZOOM and IRIS connectors on the Lens Data Box. If a CLM-2 motor is to the left of the lens, set the DIRECTION switch on the Lens Data Box to L. If it is to the right, set the DIRECTION switch to R.

3. Lens Data Displays (LDD and LDD-FP)

Built into weatherproof housings, the TFT screens of the Lens Data Displays offer a brilliant and sharp picture as long as the ambient temperature remains between -10° to + 40° C/14° to 104° F. You can choose between two different Lens Data Displays: the Lens Data Display (LDD) and the Lens Data Display – Focus Puller (LDD-FP). Even though there is a difference in size and design, both offer the same functionalities.



Caution!
It is not possible to connect and use two Lens Data Displays simultaneously on one camera and/or on its accessories.

The LDD has a large TFT screen that shows several sorts of information simultaneously. By switching between the Lens Screen and the Status Screen, you will get the same information from the smaller LDD-FP.

MOUNTING THE LENS DATA DISPLAYS ON THE STUDIO AND LITE

Both Lens Data Displays can be mounted on any Accessory shoe, such as on the Studio Readout or Lite Mask Frameglow.
A mobile arm is part of the LDD.

Lens Data Display mounting fig.6/14

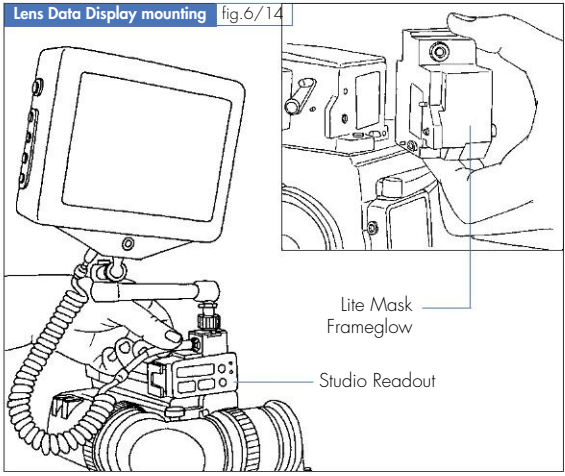

A Backplate together with the Shoe Post allows the LDD-FP Holder to be mounted on any Accessory shoe. A collapsible Sunshade attaches by means of Velcro.

LDD-FP with Holder fig.6/15

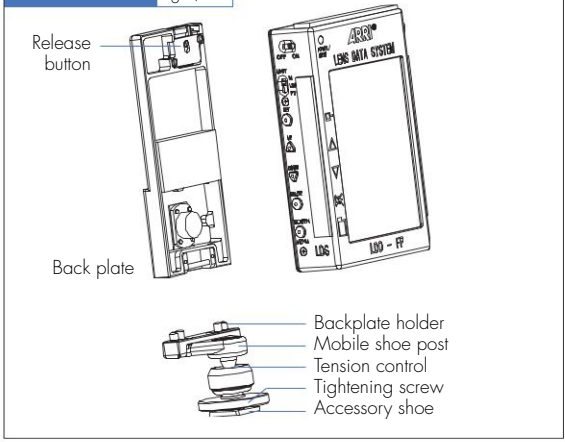

Fasten the LDD-FP by pressing it towards the Backplate. By pushing the release button on top of the Backplate, the LDD-FP can be removed from the Holder.

Because of its size, the LDD-FP can easily be mounted at the most convenient place for optimum visibility, e.g. on the Matte Box. Therefore, ARRI provides different "L-Brackets" complete with an Accessory shoe that enables mounting on the MB-14, 16, 18 and 19. These "L-Brackets" are fixed on the Matte Box Side Flap Holder. If a Side Flap is used in addition, a small clip needs to be attached on the Flap to prevent the L-Bracket from rotating.

L-Bracket mounting fig.6/16

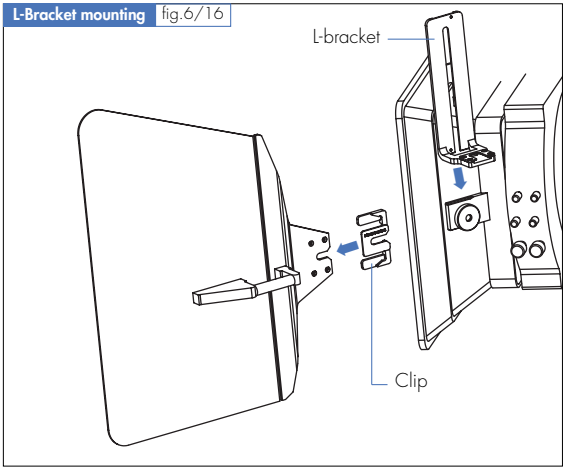

CONNECTING THE LENS DATA DISPLAYS

The LDD and LDD-FP can be connected to the cameras in different ways. It is possible to connect the Displays to the dedicated LDD connectors on the Studio Readout, on the Lite Mask Frameglow and on the Remote Control Station (RCS).
With other cables, both Displays can also be connected to the Camera Accessory Connector CAC and to the Speed Control Box Accessory Connector SAC. Therefore, different cables – each one transmitting power and signal – are provided.



Caution!
When using a cable longer than 3 m/10 ft to connect the Displays to a CAC or SAC, the short Compensation Cable KC 77-S must be added in order to obtain the correct termination.
Please note that no cable connection (e.g. Cable Drum + Cable) should be longer than 53 m/175 ft in length.

On the LDD, connectors labelled LDD and LCS enable versatile connections.
On the LDD-FP, the smaller LDD-FP-connector located on the right side enables a variety of connections by using other cables. The second connector on the rear side of the LDD-FP is for future applications unavailable at the time of writing.

LDD connections fig.6/17

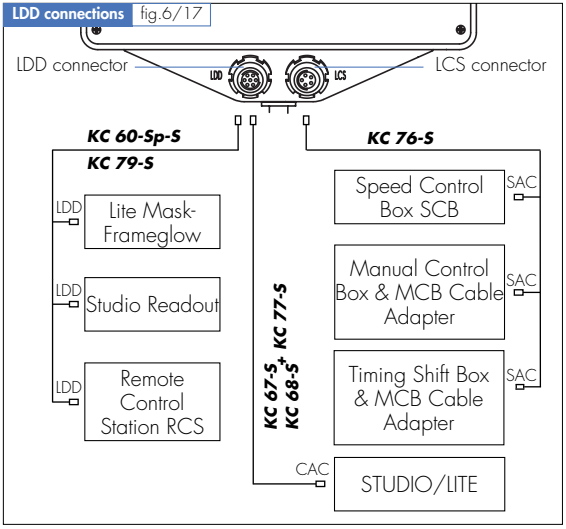

LDD-FP connections fig.6/18

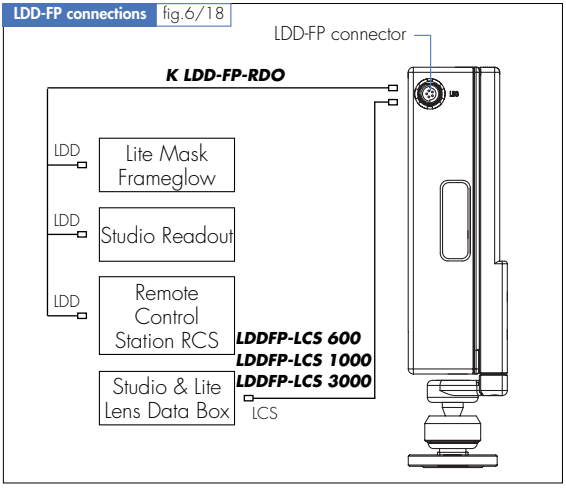

Power/Sleep button (LDD) – ON/OFF switch (LLD-FP)
To power the LDD, briefly push the POWER/SLEEP button.
On the LDD only, the SLEEP status can be activated by briefly pushing the POWER/SLEEP button.

To power up the LDD-FP, set the switch to ON.

The SLEEP status is indicated on both Displays by a slowly blinking LED.
To turn both Devices *OFF*, push the POWER/SLEEP button for about 3 seconds or put the LDD-FP switch to OFF.

Power/Sleep LED

- The LED is *OFF* when the Displays and/or the camera are not powered.
- Glows green when the Displays are *ON*.
- Blinks slowly green when the Displays are in SLEEP status
- Glows red indicates that the Displays are *ON* but that a problem occurs.

Notice

In case a problem occurs, turn the Display OFF; set the camera MAIN switch to OFF and start again after about 5 sec. If the problem persists, ask your ARRICAM Maintenance Centre.

THE CONTROLS OF THE LENS DATA DISPLAYS

LDD fig.6/19

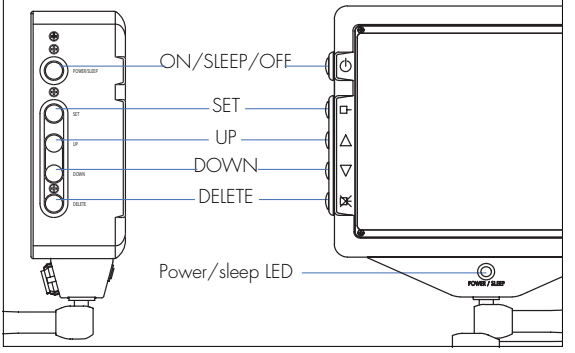

LDD-FP fig.6/20

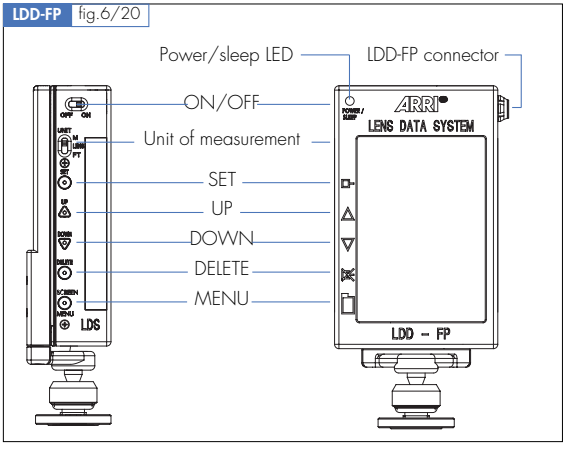

Set button
On both Displays, pushing the SET button will insert Marks on the focus scale.
On the LDD-FP, selects options when the Main Menu is activated.

Up button
On both Displays, increases the numbering of the Focus Mark when it lines up with the index.
On the LDD-FP, steps forwards through options when the Main Menu is activated.

Down button
On both Displays, decreases the numbering of the Focus Mark when it lines up with the index.
On the LDD-FP, steps backwards through options when the Main Menu is activated.

Delete button
On both Displays, pushing the DELETE button briefly, a Focus Mark next to the index will be deleted. When pushed for 3 sec. at least, all Marks will be deleted.

ON THE LDD-FP ONLY

Unit of measurement selector
Select the unit of measurement between M (meter), LENS (same unit as engraved on the focus ring) and FT (feet). The change affects the focus scale numbers, the depth of field information, the hyperfocal distance and the close focus indication.

Notice

To change the unit of measurement on the LDD, the UP and DOWN buttons will be used – see page 250.

Menu button
When the LDD-FP is powered up, briefly pushing the MENU button will switch from one Screen to another one. To switch between a Sub-menu and the Main Menu, push for at least 3 sec. the MENU button.

FUNCTION OF THE LENS DATA DISPLAYS

Preliminary remark

Although there are some differences in design, the handling of the LDD and LDD-FP is quite similar. The main difference is in the kind of data displayed.

On the larger LDD Screen all data is shown at once. To see the same data on the smaller LDD-FP, toggle between two complementary Screens. This allows the user to configure the Screens accordingly to his/her needs.



Caution!
The Lens Data Displays are only operational in combination with a Lens Data Box mounted on a powered camera.

In order to save power, both Screens automatically go into sleep mode – the LDD after about 5 min. and the smaller LDD-FP after about 2 min. – if no display relevant parameters are changed. As soon as a camera parameter or a lens setting has been altered as well as when a message appears (e.g. low battery), the Screens wake up automatically.
Only if an LDS Lens is mounted on the camera, are the lens parameters displayed. If no LDS Lens is used, the message **No lens detected** lights up but the relevant camera parameters will still be shown. If an LDS Prime Lens is detected, its focal length will immediately be displayed

and arrows appear on the screen. After initialization, the lens scales appear and the depth of field will be displayed graphically as well as numerically.

Start-up

When a Lens Data Display is powered up and it detects an LDS Lens, the lens rings need to be rotated so the Lens Data System can recognize the lens ring positions. When ARRI CLM motors are used, this will happen automatically during the calibration procedure. If no CLM motors are used, this can be done simply by turning the rings by hand. Rotate each barrel slowly until the arrows on the Screen fade out and the scales appear.

The LDD Display

As soon as the LDD is switched ON, and during the automatic set up of the LDS functions, information about the installed software will appear for a few seconds. It is recommended to note the LDS software version for the ARRICAM Maintenance Technician in case of inquiries. As soon as the set up is completed, the screen shows two windows.

LDD Screen fig.6/21

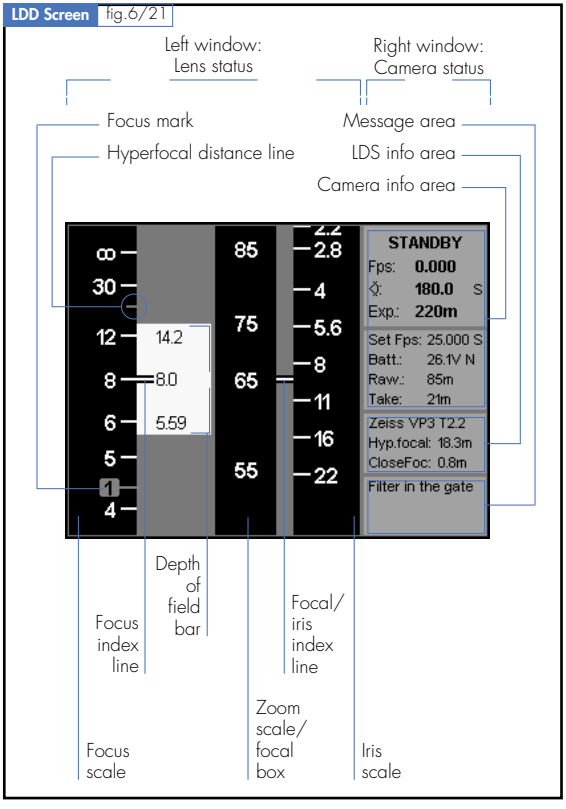

The left window mimics the three scales on lens barrels: focus, zoom and iris. They have the same numbers, the same divisions and sub-divisions. If an LDS Prime Lens is used, the focal length is displayed in a little box instead of a scale. Each LDS Lens contains a depth of field table which enables the Lens Data Box to visualize the depth of field on a Lens Data Display and/or video monitors. On the Lens Data Displays, a yellow bar will simulate the depth of field while figures on its top and bottom show the boundaries. If the yellow depth of field area reaches the edges of the screen, the near and far distances will continue to update. Facing the focus index line, the actual focus setting is shown in meters and centimeters or feet and inches.

The right window shows camera and lens status. Furthermore, messages and warnings will appear if they are generated. As well as the actual text information, the background colour will also alter; this allows camera status changes to be seen from a distance.

Background colour	Camera Info Area
Gray	Standby
Orange	INCHING RUNNING UP RUNNING DOWN
Green	RUN RAMPING
Red	RUN ASYNC NOT READY

Background colour	Message Area
Red	Wrong operation

UNIT OF MEASUREMENT

The Lens Data Displays will automatically show the same unit of measurement as that used by the lens. On the LDD only, this can be overridden as follows:

- To display all values in feet, hold the DOWN button while powering up the Lens Data Display.
- To display all values in meters, hold the UP button while powering up the Lens Data Display.

The selected unit of measurement will be used until the Lens Data Display is powered down. If it is desired, the ARRICAM Maintenance Centre can define that your LDD permanently shows one of the units of measurement.

On the LDD-FP, the UNIT selector located on the left side enables the choice of the unit – see fig. 6/20.

THE HYPERFOCAL DISTANCE LINE

When the hyperfocal distance line faces the focus index, everything from half the hyperfocal distance to infinity appears sharp. The Lens Data System automatically calculates the hyperfocal distance depending on the focal length, the iris aperture and the selected circle of confusion.
A small grey line on the focus scale as well as a figure in the LDS Info Area indicate the hyperfocal distance.

LDD Screen fig.6/22

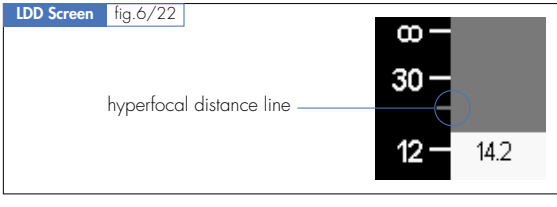

CIRCLE OF CONFUSION

The circle of confusion (coc), used for the calculation of the depth of field and the hyperfocal distance, can be selected on both Lens Data Displays.
Option switches located behind the coverplate at the rear of the LDD enable the selection between four options. The default setting used to display the depth of field is 0.025 mm / 1/1000".

Notice

We recommend you ask a ARRICAM Maintenance Centre for setting your coc preference.

LDD-label circle of confusion fig.6/23

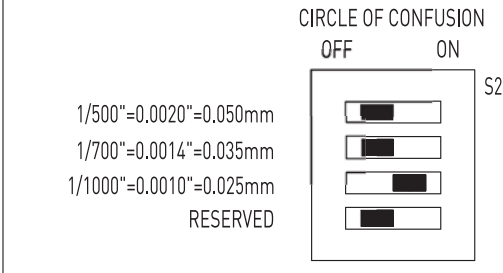

To select a circle of confusion:

1. Remove the LDD from the camera and lay it screen downwards on a clean place.
2. Open the LDD by unscrewing the four Phillips screws with a PZ-0 or PH-0 screwdriver.

On the top right corner, next to the POWER/SLEEP button, two rows of Option switches are located. The upper row labelled S2 contains four switches relevant for selecting the coc.

3. Set the dedicated Option switch to ON.

Caution!

- *Only one of the Option switches should be set to ON. If none or more than one switch is set to ON, the LDD automatically will use the default setting.*
- *The lower row labelled S1 is dedicated for the ARRICAM Maintenance Personnel only, do not touch it!*

The right window is divided into three areas: Camera Info, LDS Info and Message.
The unit of measurement used in the film length display is established by the magazine setting.

CAMERA INFO AREA

LDD Screen – Camera Info Area fig.6/24

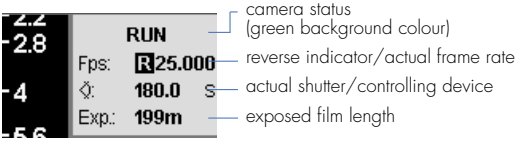

Camera Status
On top of the right window, the actual mode will be displayed: *Standby, RUNNING, INCHING or NOT READY*.

Fps
The fps display always shows the actual frame rate of the camera. So in *Standby*, the fps value shows **0.000** . During *RUN UP, RUN, RUN RAMP or RUN DOWN*, the current camera frame rate is displayed.

Fps Reverse Indicator
When the camera is set to *RUN REVERSE*, R will precede the frame rate.

Shutter
The current shutter angle opening is always displayed. Next to the figure, a single letter will indicate the item which controls the shutter opening – see table below.

Exp.
The length of exposed film will be displayed here.

LDD Screen – Camera Info Area fig.6/25



Set Fps
Not only the preset frame rate but also the device which controls the camera is indicated.
Table of abbreviation:

	(no letter) the frame rate has been preset on the Camera Control Panel.
S	Speed Control Box (SCB)
M	Manual Control Box (MCB)
Y	External Sync signal processed by SCB
T	External Sync signal (time-code) processed by the In-camera Slate Box (ISB)
V	External Sync signal processed by the Video Assist (IVS)
W	Wireless Remote Control (WRC)
C	ARRIMOTION Camera Control Box (CCB)

Battery
The actual voltage of the supplied power is indicated. If the battery voltage drops to the battery warning level, the battery warning and the battery value (e.g. 20.6 V) will flash. If the power level drops below the point where the camera can *RUN*, the battery warning will remain flashing, and the camera will go into *NOT READY* status; simultaneously the background will go red.

Next to the voltage figure, the letter N or U will show if the 24 volt NiCad (N) or the User (U – Lithium-Ion or other battery type) warning level has been activated.

RawStk
The magazine counter is displayed here. If no magazine is attached, **0 m** or **0 ft** will be displayed. If the value reaches the warning level, the label RawStk and the raw stock length will flash. If there is a roll-out, the line will remain flashing, and the camera will go into *NOT READY* status – simultaneously the background will go red.

Take
The length of the film exposed between the last start and stop will be displayed here.

LENS DATA SYSTEM (LDS) INFO AREA

LDD Screen – LDS Info Area fig.6/26

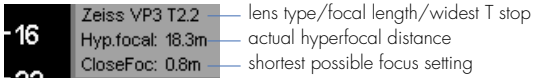

Lens Type
The brand name (e.g. Zeiss), the type identification (e.g.Ultra Prime), the actual focal length and the widest T stop are shown in this line.

Hyperfocal Distance
For prime lenses: hyperfocal distance is shown and changes dynamically as the iris setting changes.
For zoom lenses: hyperfocal distance is shown and changes dynamically as iris and/or zoom setting changes.

Close Focus
The closest possible focus setting with this lens is shown.

MESSAGE AREA

LDD Screen – Message Area fig.6/27

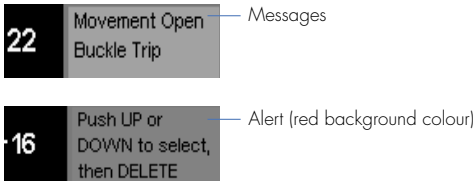

The Message Area provides more detailed information about the camera and LDS status. It displays status messages as well as alerts.

Status Messages
Status messages contain information about the camera's status. These messages are short and will be displayed while the respective camera status persists. If a new message appears, it will be added to the existing ones. Among others, the following messages can appear:

Buckle Trip	A buckle trip has been tripped
Filter in the Gate	A filter is installed in the Aperture Plate
Film Jam	A film jam has occurred in camera or magazine
Movement Open	Movement is not locked in the front position
Roll Out	Camera stops before film end passes the gate, Dust Check ans PHASE are still possible
No Reverse	Preset fps is higher then 32 or Lite Magazine is mounted
Illegal Fps	More then 40 (LITE) or 60 (STUDIO) fps has been set
Mag takes up film	Magazine is taking up loose film – camera NOT READY
Film End < 6 m /< 20 ft	According to magazine counter – end of film warning
Heater	Heater is activated – camera is NOT READY
Dust Check	The shutter is out of the viewing path
Adapter Cover	Warning! camera is STANDBY but magazine adapter cover is missing!
Low Battery	Change battery as soon as possible

Alert

An alert is displayed when an error occurs while handling the camera or an accessory; e.g. incorrect setting of parameters. When an alert appears all status messages disappear as long as the alert is displayed. During an alert, the background of the Message Area turns red, see the troubleshooting list in the chapter 12 –.Appendix.

Magazine Error	Use another magazine
Mag take up side runs free	Reload magazine
Cannot set more than 9 Marks	Delete a Focus Mark to set a new one.
Push UP or DOWN to select, DELETE to delete	Deleting a Focus Mark
Push SET to select, then UP/DOWN to renumber	Renumbering a Focus Mark
Push UP or DOWN to select, then hold SET to remember	Moving a Focus Mark

The LDD-FP Display

After the LDD-FP is powered on, the initialisation starts while the software version and some preset data are shown. When this procedure is completed, the Lens Screen will appear.

The layout and the colour code of the LDD-FP Lens Screen is similar to that of the LDD. Therefore only the differences will be described here. Because of the limited space, only two of the three lens scales can be shown at any one time and are selected by means of the screen option menu. The yellow depth of field bar will only be displayed in combination with the focus scale in the left window. The middle of the right window shows the focus setting with the near and far boundaries of the depth of field. The iris aperture and the focal length are always displayed at the bottom of right window while camera status information can be added or removed on its top.

A small difference in monitoring which device controls the frame rate and shutter opening on the camera, exists: while the LDD uses only a single letter at the end of the particular line, the LDD-FP does the same on the Lens Screen but on the Status Screen shows a 3 or 4 letter acronym in addition.

Lens-	Status-	Screen (remote) control device
		(no letter) preset by Camera Control Panel.
S	(SCB)	Speed Control Box (SCB)
M	(MCB)	Manual Control Box (MCB)
Y	(SYN)	External Sync signal processed by (SCB)
T	(TcSy)	External Sync signal (time-code) processed by the In-camera Slate Box (ISB)
V	(ViSy)	External Sync signal processed by the Video Assist (IVS)
W	(WRC)	Wireless Remote Control (WRC)
C	(CCB)	ARRIMOTION Camera Control Box (CCB)

Furthermore, the Status Screen can be selected to show the LDS and camera parameters as are displayed on the right window of the LDD.

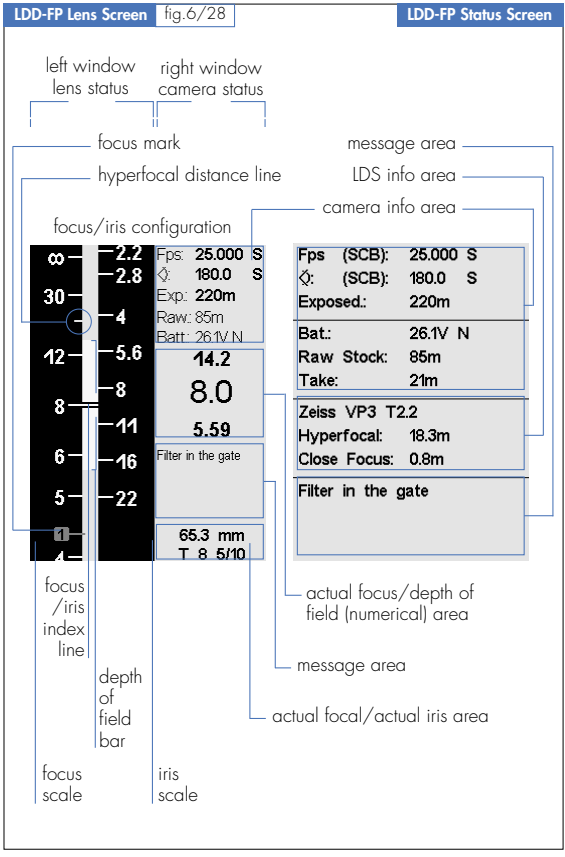

The Main Menu

To enter the Main Menu, push the MENU button for at least 3 sec.

To select a Sub-menu or an option, move the cursor by pushing the UP and DOWN buttons.

To confirm an option, press the SET button.

Depending of the next desired operation, use one of the two options to leave a Menu:

- To return directly to the Lens Screen, push the MENU button for at least 3 sec.
- By pushing either the SET or MENU buttons briefly, the Main Menu will appear.

The Sub-menu Brightness

When pushing the MENU button for at least 3 sec, the Main Menu will appear with the first Sub-menu BRIGHTNESS highlighted.

LDD-FP Main Menu – Sub-menu Brightness fig.6/29

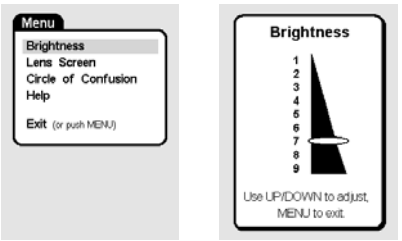

By briefly pushing the SET button, the Brightness Screen will appear. By using the UP and DOWN buttons, the brightness can be adjusted. When leaving the Sub-menu, the new adjustment will be saved.

The Sub-menu Lens Screen

When the Main Menu is shown, the highlighted cursor can be moved to the Sub-menu Lens Screen. By briefly pushing the SET button, the Lens Screen will appear.

LDD-FP Main Menu – Sub-menu Lens Screen fig.6/30

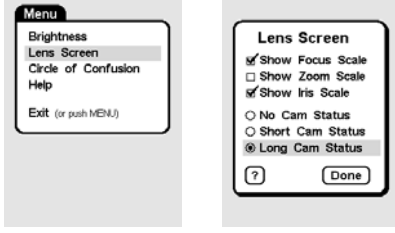

The upper part enables the selection of one or two of the three lens scales - Focus, Iris and Focal length/Zoom – to be displayed. A warning will remind you that only two of the three options can be selected at once.

Option	1st Scale	2nd Scale	Yellow Bar
1	focus		depth of field
2	focal/zoom		
3	iris		
4	focus	focal/zoom	depth of field
5	focus	iris	depth of field
6	focal/zoom	iris	

In the lower part, only one option can be selected.

LDD-FP Lens Screen – Camera Info Area fig.6/31

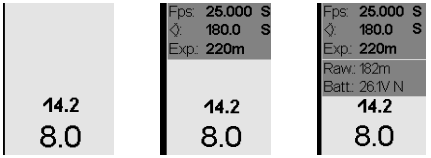

To save the selected option, push the SET button. By briefly pushing the MENU button or after having moved the cursor to **Done** and pushed the SET button, you will not only save the selected options, but also reach the Main Menu.

The Sub-menu Circle Of Confusion (coc)

LDD-FP Main Menu – Sub-menu Circle of Confusion fig.6/32

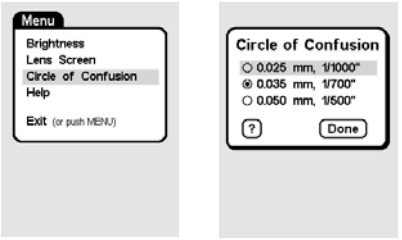

After having selected the Sub-menu circle of confusion, the coc screen will offer three options. To select the appropriate option, move the cursor on it and push the SET button. Then move the cursor to **Done** and press SET to return to the Main Menu. When pushing the MENU button for 3 sec. the Lens Screen will appear.

The Sub-menu Help

When selected the Sub-menu Help, a screen of information will be displayed. Depending on the active Sub-menu, pushing the SET button while the cursor marks the question mark will open useful dedicated advice.

LDD-FP Main Menu – Sub-menu Help e.g. Lens Screen fig.6/33

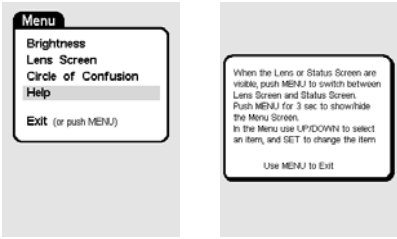

MARKING THE FOCUS SCALE ON BOTH LENS DATA DISPLAYS

Similar to the regular way of putting Focus Marks on the lens or remote control scale, the focus puller can place, move, renumber or erase Marks on the "electronic" focus scale. Up to nine differently coloured Marks can be set on the focus scale. The Displays store Marks and remember them when power is OFF. The Displays also keep Focus Marks when a new lens is attached to the camera - Marks that are out of the range of the new lens are not displayed, but still stored. The only way to remove Focus Marks is to delete them manually.

Focus Mark – examples fig.6/34

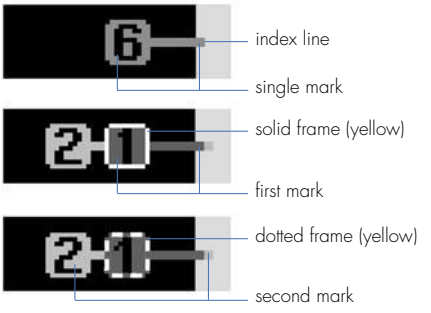

The Display's Focus Marks are square; a number and a colour will automatically be assigned. If a Focus Mark must be identified for moving or renumbering purposes, a solid or dotted yellow frame will surround this selected Mark.

Setting a Mark

By means of four buttons, located on the left side of both Displays, the "handling" of Focus Marks on the Focus Scale can be achieved.

Marks can be set at any time.

1. Turn the lens focus ring so the index line points to the position where you want the Mark.
2. Push the SET button marked ⊏– .

A Mark appears that has a number which is one unit higher than the highest Mark number present on the scale. For example, if the focus scale already has Marks numbered 1, 2, 3 and 4, the new mark will be number 5. If the highest number is 9, any unused numbers will be used.

Notice

If nine Marks are already set, pushing the SET button will not set any new Marks. Instead, the Message Area will show the alert:

9 marks are set. Erase an existing one

This will be shown for about 4 sec., or, if the button is pushed for longer than 4 sec., for as long as the SET button is pushed.

If the index line points to an existing Mark, a new Mark is added next to the existing one.

Deleting one Mark

Marks can be deleted at any time.

1. Turn the lens focus ring so the index line points to the Mark that should be deleted.
2. Push the DELETE button marked ⌦ briefly.



Caution!

If you push the button for more than 3 sec., all Marks will disappear!

If the index line does not point at a Mark and the DELETE button is pushed, nothing happens. If the index line points to multiple Marks at the same scale position, the DELETE button will not delete any of them at first. Instead, if the DELETE button is pushed, an alert will be displayed in the Message Area:

Push UP/DOWN, DELETE to delete

The first time the UP or the DOWN buttons are pushed, the Mark closest to the index line shows the solid yellow frame. The alert disappears when the solid frame disappears. Each further push of the UP or the DOWN buttons moves the solid frame to another of the Marks that are at the same scale position. Now the DELETE button

will delete the selected Mark. If the DELETE button is not pushed, the frame disappears after 3 sec.

Deleting all Marks
Push the DELETE button for 3 seconds.

Renumbering a Mark
1. Turn the focus ring until the Mark to renumber aligns with the focus index line.
2. Push the UP/DOWN buttons marked △ or ▽.
3. This will cycle through the following numbers: 1, 2, 3, 4, 5 , 6, 7, 8, 9.

Since each number has a colour associated, the colours will also change.

Notice

The Displays will not update existing numbers, so it is possible to get duplicate numbers.

If a Mark is being set to the number that already exists, there will be two Marks with the same number. The Displays will not automatically renumber.

If the index line points to multiple Marks at the same scale position, the UP or the DOWN buttons will not renumber them at first, but instead place a solid frame around the Mark closest to the index line. Then each further UP or DOWN button push will select another one of the Marks that are at the same scale position. The Message Area will display the following alert:

Push SET to choose, UP/DOWN to renumber

This alert disappears when either the solid or the dotted frame disappears.

Pushing the SET button now will change the solid frame to the dotted frame. Now the UP or the DOWN buttons will renumber the Mark with the dotted frame. If the SET button is not pushed, or the UP or the DOWN buttons are not pushed, the frame disappears after 3 sec. If the DELETE button is pushed while Mark has either the solid or the dotted frame, that Mark is deleted.

Moving a Mark

1. Turn the focus ring until the Mark to move aligns with the focus index line.
2. Push the SET button and keep it held down.
3. Turn the lens focus ring.
4. Release the SET button.

If the index line points to multiple Marks at the same scale position, pushing and holding the SET button will not allow a Mark to move at first. Instead, an alert will be displayed in the Message area:

Push SET to choose, UP/DOWN to remember

The first time the UP or the DOWN buttons are pushed, the Mark closest to the index line is highlighted. The alert disappears when the solid frame disappears.

FOCUS TRACKING

It is now possible to use a distance measuring device (such as the Cinematography Electronics Cine Tape Measure) to display a pointer on the LDD-FP indicating the distance to the subject. This can be used simply for information purposes or, by pressing and holding the FOCUS button on the WHA-3, the motor on the focus axis will drive the focus ring to automatically track the subject. There is also a new line on the focus scale of the LDD-FP indicating the position of the focus handwheel of the WFU-1. By matching these two indicators, the 'handover' from manual to automatic focus will be smooth.

Operation
In the LDD-FP main menu the entry called FOCUS TRACKING turns on and off the function of the Focus-Button, which is attached to the side of the WHA-3. With this option OFF, the Tape Measure Mark is still displayed but the Focus Motor will not track it.
The Slow, Medium and Fast options determine how fast the Focus Motor responds to the changing distance information.

Compatibility
The following items are needed for Focus Tracking: Studio or Lite with Lens Data Box, CLM-1 or CLM-2 lens motor, LDS lens, LDD-FP, Cine Tape Measure (or other distance measuring device with industry standard output), WHA-3, CAC to CTM cable.

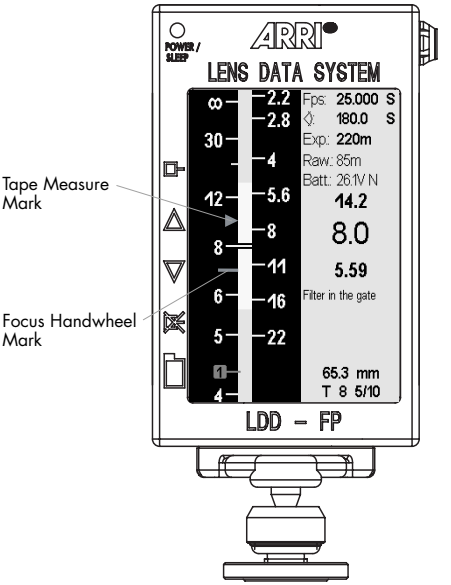







THE MANUAL CONTROL BOX, THE SPEED CONTROL BOX, THE TIMING SHIFT BOX

The Camera Control Boxes

Introduction

With the Camera Control Panel on the left side of the camera bodies, the full range of fps as well as the most usual shutter openings can be set. To extend the possibilities of the ARRICAM System, three compatible components have been created specially for the ARRICAM Cameras. The Manual Control Box (MCB), the Speed Control Box (SCB) and the Timing Shift Box (TSB) can be used independently or in combination, depending on the required task. While the boxes can be attached directly to the Studio body, cable connection is necessary to use them with the Lite. In addition to the Boxes, ARRI offers two remote adapters to help you to configure the equipment in the most convenient way.

The Manual Control Box allows – by means of a handwheel – the control of either the shutter opening or the frame rate. Being used together with the Speed Control Box, it allows the manual control of changes, e.g. speed *RAMPING*, expanding/reducing the depth of field or a motion blur while maintaining the option of automatic exposure compensation.

The Speed Control Box allows the control of the *RUNNING* direction and the setting of accurate frame rates as well as the change between two preset fps in a preset time. If required, the exposure is automatically compensated during changes of the frame rate with the shutter opening or the iris aperture.

The SCB also allows the synchronization of the ARRICAM Studio and Lite with several external signals.

AUTOMATIC EXPOSURE COMPENSATION

When the frame rate is altered the exposure time will change. In order to maintain a constant exposure, the Speed Control Box allows, by changing the shutter opening, the automatic comensation of the exposure time while the frame rate changes – this is called *shutter compensation*. If the iris is controlled by a lens motor connected to the Lens Data Box (LDB), an *iris compensation* can be controlled by the Speed Control Box.

- If IRIS COMPENSATION is selected, you may enter the fps values in accordance with the amount of iris stops available on the lens, e.g. 6 stops (T 2 to T 16) will allow changes in the range 60 fps to 1 fps (actually, fractionally under 6 stops).

- If the SHUTTER COMPENSATION is selected, you may enter the fps values in accordance with the possibility of the shutter which is a range of 4 stops (11.25° to 180°). So you may choose for example a change from 2 fps to 32 fps.

Notice

Actually, the automatic iris compensation with the MCB and SCB is only possible with LDS Lenses. If no LDS Lens is used, the ARRI Wireless Remote Control will allow the iris control and so the automatic exposure compensation with the ARRICAM Cameras.

STROBOSCOPY, MOTION BLUR AND DEPTH OF FIELD

By altering the shutter opening, the exposure time will change. Depending on the frame rate, the following exposure times will result from changing the shutter opening:

∢	3 fps	6 fps	12 fps	24 fps	48 fps
180°	1/6	1/12	1/24	1/48	1/96
90°	1/12	1/24	1/48	1/96	1/192
45°	1/24	1/48	1/96	1/192	1/384
22.5°	1/48	1/96	1/192	1/384	1/768
11.25°	1/96	1/192	1/384	1/768	1/1.536

The exposure time will effect the sharpness of either moving objects or the whole frame when the camera is moving.
Short exposure time will increase the sharpness or reduce the motion blur. Therefore, in moving the camera while the shutter angle is small, a stroboscopic effect can appear. This can cause an unpleasant result or an intended effect.
By altering the iris aperture, the depth of field (DoF) will change.
So for example, while setting an LDS Ultra Prime 40 mm Lens to 3 m/10 feet, the depth of field will be at
F 2.0 about 0.55 m/1.10"
near: 2.75 m/9' far: 3.30 m/10' 10"
and at
F 16 about 9.60 m/31.6'
near: 1.70 m/5' 7" far: 11.30 m/37' 1"
depending on the circle of confusion 0.025 mm/ 1/1000".

An iris versus shutter compensation is only possible within a range of 4 stops, so for example

	∢	T
1st stop	11.25°	2.8
2nd stop	22.5°	4
3rd stop	45°	5.6
4th stop	90°	8
	180°	11

By changing the shutter opening and compensating the exposure by altering the iris opening (or vice versa) the changes will not only affect the motion blur but also the depth of field. So either a strobe effect or a "focus ramp" can be achieved with the Speed Control Box in combination with the Manual Control Box.

The Manual Control Box (MCB)

MOUNTING AND CONNECTING THE MCB

To mount this box on the ARRICAM Studio, first turn the camera MAIN switch *OFF* and then use a 3 mm metric hex wrench to remove the small cover on the rear of the camera body. After checking that both connectors are clean, attach the Manual Control Box by engaging the two pins in the gauged holes and then by tightening the two mounting screws.

Studio – MCB mounting fig.7/1

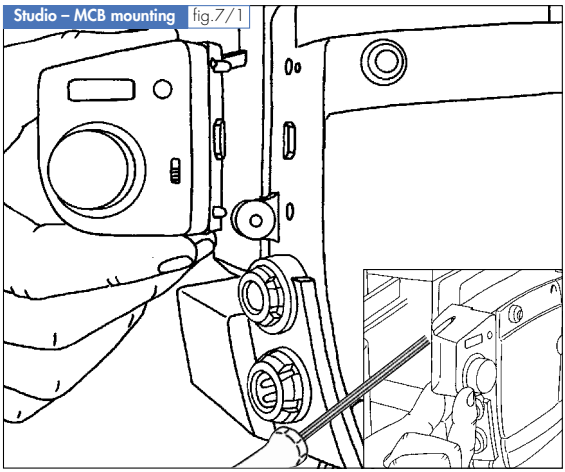

Notice

If no Manual Control Box is installed, the protection cover must be fitted on the camera. If you intend to mount the MCB and the Speed Control Box to the Studio, you must first attach the SCB to the camera. To attach or remove the SCB or the Studio Camera Handle from the Studio, the MCB has to be removed first.

Manual Control Box (MCB) fig.7/2

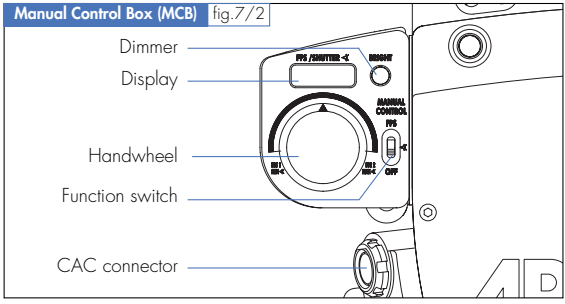

The MCB Cable Adapter

To connect the Manual Control Box to the Lite, first mount the MCB on the MCB Cable Adapter or the Remote Control Station (RCS) and connect a cable between the adapter and the CAC connector of the camera (also works with the Studio).

MCB + Cable Adapter fig.7/3

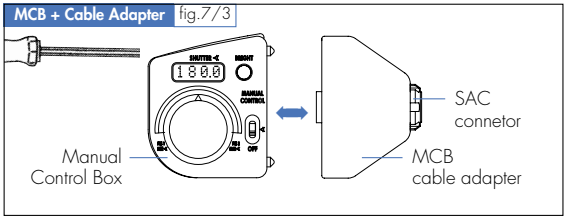

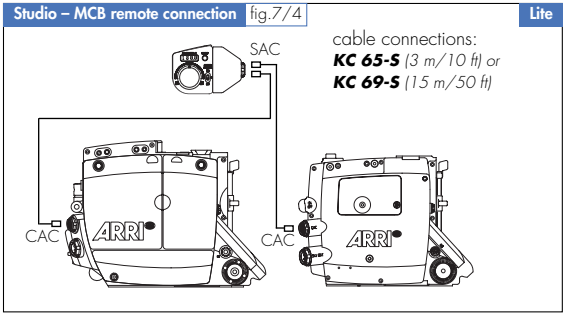

CONTROLS AND DISPLAYS

MANUAL CONTROL BOX

– – – – MCB is swiched *OFF*
STANDBY MCB is switched *OFF*
RUNNING MCB is switched *OFF*

CCB Camera Control Box controls the camera
STANDBY No fps or shutter adjustment is possible with the MCB because the ARRIMOTION CCB/ Jogbox controls the camera for shooting *FORWARD*.

– CCB Camera Control Box controls the camera
STANDBY No fps or shutter adjustment is possible with the MCB because the ARRIMOTION CCB/ Jogbox controls the camera for shooting *REVERSE*.

Syn Speed Control Box controls the camera sync
NOT READY No adjustment of the fps or shutter is possible with the Manual Control Box because the Speed Control Box controls the camera to *RUN FORWARD* and the SPEED CONTROL switch is set to SYNC.

– Syn **NOT READY**	Speed Control Box controls the camera sync No adjustment of the fps or shutter is possible with the Manual Control Box because the Speed Control Box controls the camera to *RUN REVERSE* and the SPEED CONTROL switch is set to SYNC.
TcSy **STANDBY**	In-camera Slate Box controls the camera sync No adjustment of the fps is possible with the MCB because the In-camera Slate Box controls the camera (time-code).
ViSy **STANDBY**	Video Assist controls the camera sync No adjustment of the fps is possible with the MCB because Video Assist controls the camera.
WRC **STANDBY**	Wireles Remote Control controls the camera No fps or shutter adjustment is possible with the MCB because the Wireless Remote Control controls the camera.
– WRC **STANDBY**	Wireles Remote Control controls the camera No *REVERSE* fps or shutter adjustment is possible with the MCB because the Wireless Remote Control controls the camera.

BRIGHT button

By pushing this button, you will increase or decrease the brightness of all displays. Three steps are cycled through: dim, normal, bright.

Function Switch (MANUAL CONTROL)
By sliding the little switch you will select the function of the handwheel: FPS, ⊰, OFF.

Handwheel
Depending on the function selected with the MANUAL CONTROL switch, the handwheel will either allow the adjustment of the shutter opening, the frame rate or the control of the ramping time between the two frame rates preset on the Speed Control Box.

FUNCTIONS AND OPERATIONS OF THE MANUAL CONTROL BOX

Depending if the MCB is used alone or together with the Speed Control Box, its functions differ slightly.

MCB used alone

Depending on the setting of the MANUAL CONTROL switch on the MCB, the frame rate or the shutter opening can be controlled by *TURNING* the handwheel. The MCB allows the change of frame rate using the default ranges 1 to 40 fps (Lite) or 1 to 60 fps (Studio), but without automatic exposure compensation. The actual frame rate is indicated on the MCB display.
More useful is the possibility to control the shutter opening between 0° and 180°. This manual change can occur either when the camera is *RUNNING* or in the *STANDBY*. The actual shutter opening is indicated on the MCB display.

Notice

- *ARRI guarantees the accuracy of the shutter angle between 11.25° and 180°. Please note that even though the display shows 0°, the shutter is not 100% light tight so strong light coming straight into the lens might be photographed.*
- *If a ramp is controlled by turning fast the hand-wheel, please be aware that technical boundaries will always define the shortest ramping time*

MCB used in combination with the Speed Control Box

As soon as the MCB is switched to FPS and the REMOTE LED on the Speed Control Box glows green, both programmed frame rates are automatically assigned to the limits marked FPS 1 and FPS 2 on the handwheel and only changes between these limits are possible. The control of *REVERSE* shooting in the range 1 to 32 fps is also possible. When the MCB is switched to FPS, the frame rate is set manually and the Speed Control Box timer is overridden.

SHUTTER Verses IRIS COMPENSATION
(only possible with an iris motor connected to a Lens Data Box)

Switch the MCB to ◁ (shutter angle) and the Speed Control Box COMPENSATION switch to IRIS. Set the iris by means of the iris OPEN/CLOSE buttons. Change the shutter angle by *TURNING* the handwheel. The resulting iris compensation is done automatically.

Speed Control Box (SCB) fig.7/5

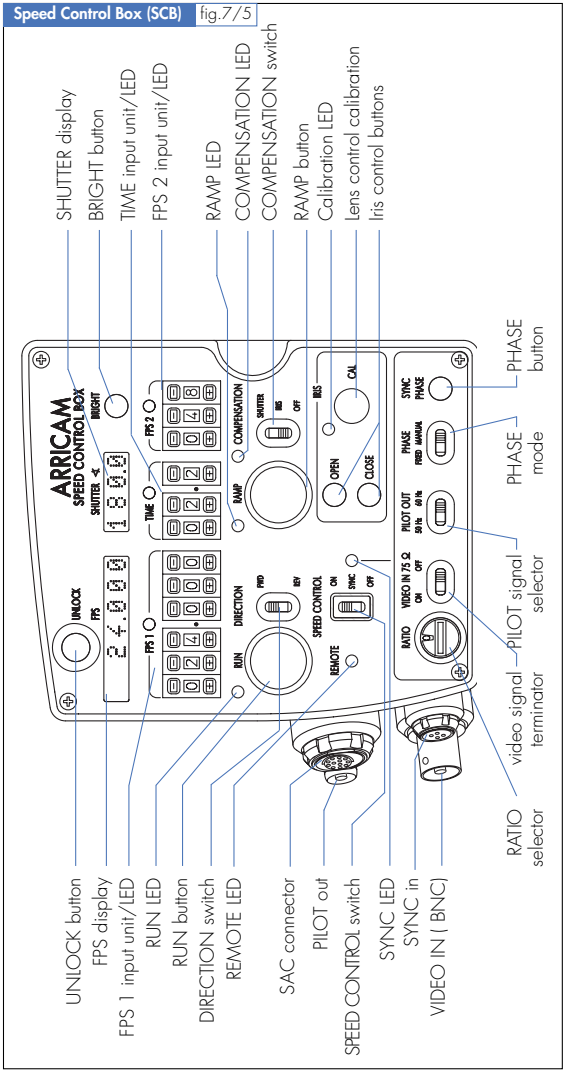

The Speed Control Box (SCB)

MOUNTING THE SCB TO THE ARRICAM STUDIO

Notice

Before connecting or removing an electrical device like the SCB to or from the camera, it is advised to set OFF the camera MAIN switch.

In order to mount the SCB to the ARRICAM Studio, first remove the upper rear accessory port cover on the camera right side by pressing the release knob and sliding the cover backwards to remove it. After checking that the connectors on the camera and the SCB are clean, insert the three attachment latches of the SCB in the three guiding rails and slide it forward until it is fixed firmly.

Studio SCB mounting fig.7/6

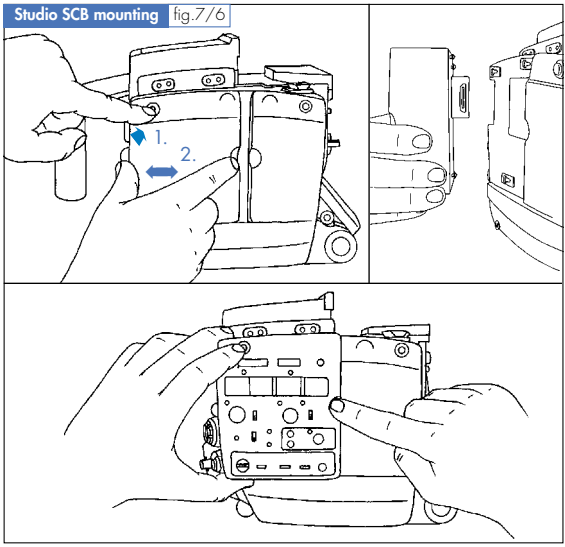

Notice

You must remove the Manual Control Box (MCB) from the camera first before being able to mount the SCB.

USING THE SCB WITH THE ARRICAM LITE

To keep the ARRICAM Lite lightweight, the use of the SCB is only possible by linking its SAC connector to the CAC connector on the camera rear. A further option is to use the Remote Control Station (RCS) (see later in this chapter).

REMOTE USE OF THE MANUAL CONTROL BOX AND SCB

ARRI provides two Cables, the KC 65-S (3 m/10 ft), the KC 69-S (15 m/50 ft) and the Cable Drum KC 73-S (50 m/165 ft) that allow to use the Manual Control Box and the SCB remotely with the Studio as well as the Lite. If the Remote Control Station is not used, the CAC Distribution Box KC 74-S allows the combined use of both control boxes.

Caution!

- *When using a cable longer than 3 m/10 ft to connect the Lens Data Displays to a CAC, the short Compensation Cable KC 77-S must be added in order to obtain the correct impedance. No cable connection (e.g. Cable Drum + Cable) can exceed 53 m/175 ft length*
- *No synchronization cable must be longer than 15 m/50 ft. Therefore, when using the Cable Drum KC 73-S (50 m/165 ft), no synchronization features are available. This will be shown by a blinking warning message* **SYN** *in the several FPS displays and on the Lens Data Displays.*

RCS (SCB + MCB) with WHA-2 connection fig.7/9

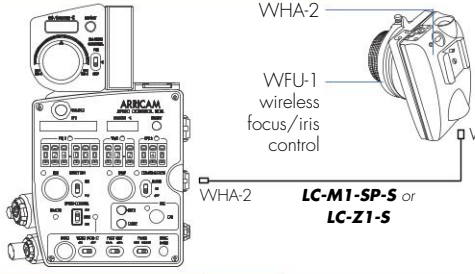

RCS/SCB remote connection fig.7/10 ***KC 65-S*** *(3 m/10 ft) or* ***KC 69-S*** *(15 m/50 ft)* **Studio**

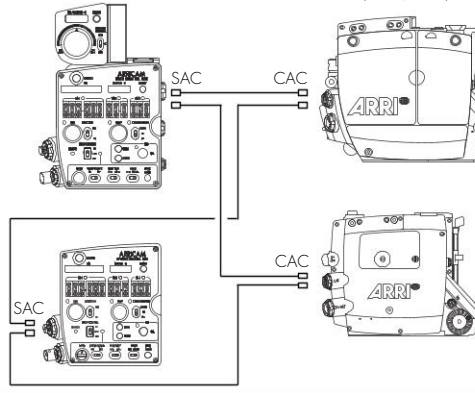

Lite

SCB/MCB remote connection fig.7/11 **Studio**

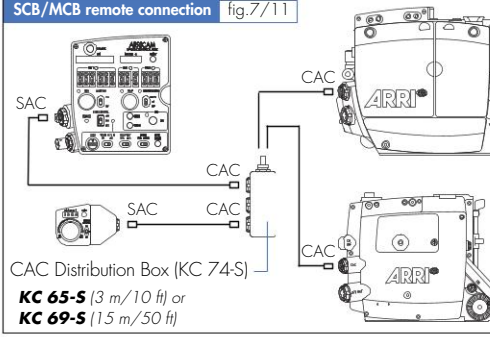

KC 65-S *(3 m/10 ft) or*
KC 69-S *(15 m/50 ft)*

Lite

At the rear of the MCB Cable Adapter and of the RCS Plate, threaded holes allow the mounting of a fixture like the ARRI quick release Dovetail Accessory Shoe.

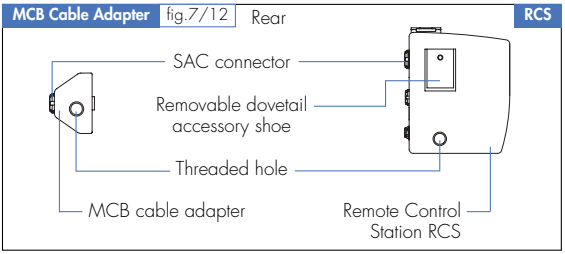

SCB Connectors

SCB CONNECTOR

This connector will automatically link the SCB to the camera or to the Remote Control Station when the SCB is positioned and fitted. Therefore the mounting of the box must be done carefully.

PILOT OUT

Depending on the selected frequency (see PILOT OUT switch on the SCB front) the camera will provide either a 50Hz or 60 Hz pilot signal.

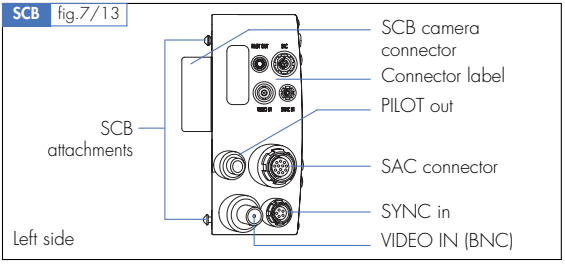

SAC CONNECTOR (ACCESSORY)

Cables are available that will allow that connection of the SCB with e.g. CAC, LDD or WHA-2.

VIDEO IN

In order to synchronize the camera with a video device, use this BNC connector to feed in the external video signal.

SYNC IN

When using an external synchronization reference, connect the cable here between e.g. a pulse generator, a Pick-up Unit or a "Master" camera.

SCB Controls and Displays

Please note: some of the controls and displays have been designed for future applications.

Fps 1
The six-digit input unit allows preseting a frame rate with an accuracy of 0.001 fps.

Fps 2
The three-digit input unit allows preseting a second frame rate (in whole fps only).

Time
The three-digit input unit allows preseting of the ramping time between 0.1 and 99.9 seconds.

Shutter (Display)
Either the actual shutter angle or further messages listed in chapter 1, page 54 are shown on the SHUTTER display.

Fps (Display)
The seven-digit display shows the actual frame rate and the *RUNNING* direction. In case another device controls the camera or a problem occurs, further messages listed in chapter 1, page 44 will appear on the FPS display.

LEDS

Please note: *The following LED descriptions are only valid when the SPEED CONTROL switch is set to ON.*

Ⓖ = *LED glows green*	(Ⓖ) = *LED blinks green*
Ⓡ = *LED glows red*	(Ⓡ) = *LED blinks red*
Ⓨ = *LED glows yellow*	(Ⓨ) = *LED blinks yellow*

Fps 1 LED

Ⓖ STAND BY/RUNNING
The input unit FPS 1 has been selected.

Ⓡ RUNNING
A change has been made on the SCB input unit FPS 1 while the camera is *RUNNING*.

(Ⓡ) NOT READY
Input frame rate is out of the possible range

Fps 2 LED

Ⓖ RUNNING
The input unit has been selected.

Ⓡ RUNNING
A change of the fps has been made on the SCB input unit while the camera is *RUNNING*.

(Ⓡ) NOT READY
Input frame rate is out of the possible range.

Run LED

Ⓖ RUNNING
Camera is *RUNNING* at the preset frame rate

Ⓡ RUNNING
Camera is *RUNNING UP* or *DOWN*, incl. the amount of time used for the In-camera Slate exposing.

Ⓡ NOT READY
A problem occurs – see warning message on FPS displays, on a Lens Data Display and/or on video monitors.

Time LED

Ⓖ RUNNING
The camera is *RUNNING* an automatic ramp.

Ⓡ RUNNING
A change of the ramping time has been made on the SCB input unit while the camera is *RUNNING*.

(Ⓡ) NOT READY
Input ramping time is too low.

Ramp LED

Ⓖ STAND BY/RUNNING
Shows that the ramp function is possible.

Ⓡ NOT READY
Shows that the ramp function is not possible.

Compensation LED

Ⓖ STAND BY/RUNNING
Shows that the ramp compensation is possible.

Ⓡ NOT READY
Shows that the ramp compensation is not possible.

Remote LED

Ⓖ STAND BY/RUNNING
Remote control signal (e.g. from MCB, WRC) is provided.

Sync LED

Ⓖ STAND BY/RUNNING
The supplied sync signal is ok.

Ⓡ NOT READY
No useable sync signal is supplied to the SCB.

Cal LED

Ⓨ NOT READY
The lens motors must be recalibrated.

(Ⓨ) NOT READY
The lens will be calibrated.

BUTTONS

Unlock

While pressing the UNLOCK button, slide the SCB to the left and take it away. Do not forget to replace the protecting cover on the camera!

Bright

By pushing the BRIGHT button, you will increase or decrease the brightness of the displays in 3 steps. The steps are 1 (low), 2 (medium), 3 (max). Using this button will not only affect the brightness of the SCB displays but also the ones on the Camera Control Panel and on the other ARRICAM Components including the Lens Data Display.

Run
Switches the camera between *RUN* and *STANDBY* status. When the camera is stopped, it will return to *STANDBY*. When the RUN button is pushed, the camera will *RUN UP* to the frame rate preset in FPS 1. Any other RUN switches either on or connected to the camera (e.g. Handgrip) will cause the camera to RUN or to STOP.

Ramp
By pushing the RAMP button, the *RUNNING* camera will start a ramp procedure according to the preset parameters. When pushed again, it will trigger a new ramping the other way round. When held pushed while the camera is *STANDBY*, the minimum time possible to *RUN* a ramp according to the preset parameters will be displayed alternately with the screen time of the currently set ramp.

Notice

The displayed minimum ramping time will not be fed in the SCB but should be entered manually in the TIME input unit.

Cal
When mounting an LDS Lens on the camera, push one of the calibration buttons (on a remote control unit or on the SCB) to start the calibration procedure. The lens iris motor will move the lens barrel to both extremes and will save the found limits in memory. Then the motor will place the barrel to the setting of the remote control or of the last one saved in the Lens Data Box. To set the iris to a new setting, use the OPEN and CLOSE buttons.

Caution!
As soon as the gear of a lens motor is coupled with the gear of a lens – regardless if it is an LDS lens or not – the motor should be calibrated in order to avoid possible damage.

Open and close
These two buttons are used to set the required iris aperture.

Sync phase
Pushing the SYNC PHASE button while the PHASE selector is set to MANUAL and the camera is *RUNNING*, shifts the phase relationship between the camera and the sync source.

SWITCHES

Direction
Select between *FORWARD* and *REVERSE* filming with the FWD/REV slide switch. As soon as the REV mode is selected, a minus sign – will light up on the SCB's FPS display, on the Camera Control Panel, on the Studio Readout and R will appear on the Lens Data Display.

Compensation
Select between the iris aperture and the shutter angle compensation mode. In the OFF position, no compensation will take place during a speed ramp.

Speed control
By sliding the SPEED CONTROL selector, you may choose between three options:

ON By selecting *ON*, the SCB is activated and the camera parameters as well as the iris aperture can be controlled by the SCB – at least one FPS LED lights up.

SYNC By selecting SYNC, all the possibilities offered by the synchronization section, located in the lower panel (labelled blue), of the SCB are activated. Please remember that these functions will not work if the 50 m/165 ft Cable Drum is used.
If a Manual Control Box is installed, switching to *SYNC* will override its settings.

OFF By selecting OFF, all controls of the SCB except the RUN button are turned *OFF*. The frame rate and the shutter opening are now set according to the values input on the Camera Control Panel.

Video in 75 Ω

This two-position switch is normally set to ON if a video signal is fed in the camera. If a video signal is forwarded from one ARRICAM to another device, e.g. second camera, slide the switch to *ON* (*75* **Ω** termination) on the last camera in chain. If you are unsure, try both settings to see which works better, particularly for any monitors on the same video circuit.

Pilot out

Select the frequency of the outgoing pilotone signal – either 50 Hz or 60 Hz.

Phase

When the PHASE switch is set to MANUAL, the SYNC PHASE button allows the phase between the sync source and the camera to be changed.

Ratio

The RATIO switch allows the selection of 5 different preset division ratios between supplied sync frequency and resulting fps, (1/1, 2/1, 3/1, 4/1, 5/2) – for details see page 298.

FUNCTIONS AND OPERATIONS OF THE SPEED CONTROL BOX

Three different tasks can be performed with the SCB:

1. The camera basic control
The frame rate can be adjusted with a precision of 1/1000 fps. Also REVERSE filming can be selected.

2. The ramping control
By entering a second frame rate, the change from the first one to the second one can be programmed. Also the necessary exposure compensation can be executed automatically, either by changing the shutter angle or – if a lens motor is connected to a Lens Data Box – the iris aperture. Furthermore, the ramping time can be set – depending on the range of the ramp and the kind of compensation – between 0.1 sec and 99.9 sec.

3. The synchronization
The synchronization of the camera speed with an external device like a video or computer monitor, another camera or a projector, can be easily achieved with the SCB.

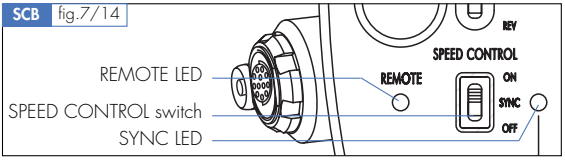

SCB fig.7/14

START UP

When the camera is connected to the power supply, the MAIN switch is set to *ON* and no problem occurs, the camera will be in *STANDBY* and the two displays will show the frame rate of the camera, **0.000** fps and the shutter angle e.g. **180.0**. Accordingly, as soon as the camera is *RUNNING*, the actual frame rate and the actual shutter angle will be shown, e.g. **24.000** and **180.0**.

Notice

If a remote control unit like the Wireless Remote Control or the Manual Control Box is connected to the camera and activated, the remote LED will glow green regardless of whether the SPEED CONTROL switch is set to ON or OFF. In this case, the FPS displays will indicate the controlling device, e.g. MCB on the Standard Camera Control Panel. On the Extended Camera Control Panel, the indication of the controlling device will only appear when a button of the FPS selector is pushed.



Caution!

If, while the camera is RUNNING, the FPS figures start to alternate with the warning message **BAT**, *you should be aware that the low battery threshold has been crossed – but the camera will continue to RUN until it can no longer reach the preset frame rate anymore. Only then, the camera will STOP and go into the NOT READY status.*
If the **BAT** *warning message appears while the camera is STANDBY, it will automatically change to NOT READY so that you will have to change the battery.*

FRAME RATE CONTROL

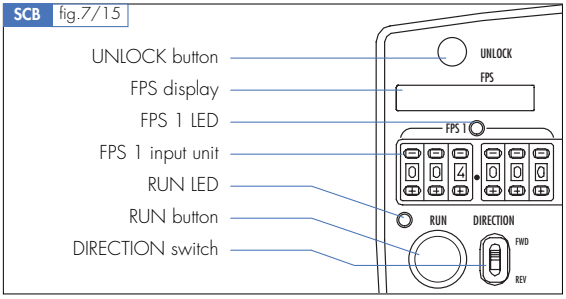

Although the two FPS selectors apparently permit the setting of higher speeds, you may actually only select frame rates between 1 and 40 (Lite) or 60 fps (Studio) *FORWARD* and between 1 and 32 fps *REVERSE*. Presuming that the SPEED CONTROL switch is set to ON (the SCB has control of the camera), when the RUN button is pushed, the camera will go from *STANDBY* to *RUN* and *SPEED UP* to the fps shown in the active input unit – the one with the illuminated green LED above. The SCB allows the setting of frame rates to an accuracy of 1/1000th fps to match the camera speed with reference to other devices.

RAMP FUNCTION

The SCB also allows the camera to change between two preset frame rates in a given time span called the ramp time. Furthermore, the SCB provides the ability to compensate the exposure by adjusting automatically either the iris aperture or the mirror shutter angle proportionally to the actual frame rate. This iris compensation is only possible with an LDS Lens, when the lens motor has been connected to the Lens Data Box and its calibration performed.

Using a Wireless Remote Control, non LDS Lenses can also be used for iris compensation.

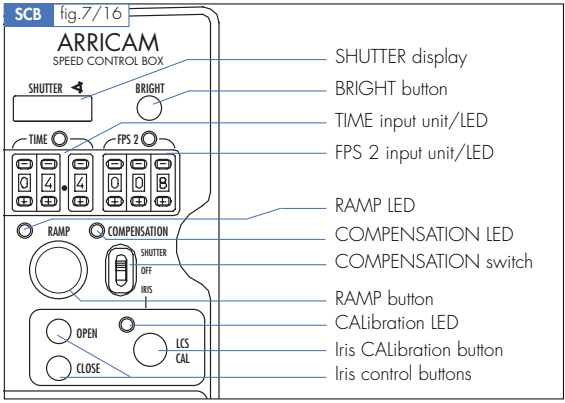

The two frame rates are programmed by pushing small buttons in fps input units labelled FPS 1 and FPS 2. The FPS 1 input unit allows the user to preset a frame rate with an accuracy of 0.001 fps. The specific acceleration – or deceleration – time within which the camera should change over to the other preset frame rate can be adjusted within the range from 0.1 to 99.9 sec. Certain physical dynamics limit the minimum ramp time therefore, if you preset, by means of the TIME input unit, a ramp time that is too short for the desired ramp and compensation, the TIME LED, the RAMP LED and the RUN LED will immediately light up red to warn that the camera is *NOT READY*. Presuming that a certain fps (e.g. FPS 1) and a ramp time are already preset, the TIME LED and the RAMP LED will automatically light up red when you introduce an fps (e.g. FPS 2) that requires a longer ramping time. When shooting, the TIME LED will glow green during the automatic *RAMPING*.

To trigger a speed ramp, push the RAMP button while the camera is *RUNNING*. The camera will start to change the frame rate in order to reach the second one in the selected time. As soon as the camera has reached the FPS 2 frame rate, you may push the RAMP button again and the camera will change the frame rate back until it reaches the preset value FPS 1.
If the camera is *STOPPED* and *STARTED* again, FPS 1 will automatically become the initial frame rate. If the Manual Control Box is used, the initial frame rate can be approximately set with the handwheel (its two end stops being FPS 1 and FPS 2).

SELECTION OF THE EXPOSURE COMPENSATION MODE

If the COMPENSATION switch is set to one of the two compensation modes, compensation will start as soon as you start the *RAMPING* procedure by pushing the RAMP button or by turning the Manual Control Box handwheel. One should be aware that the automatic compensation is only possible in a defined range! This range cannot extend 4 shutter stops or 6 iris stops.
As soon as COMPENSATION has been selected, the SCB computer will calculate the alteration of the shutter angle or the iris aperture according to the change of the frame rate. This occurs automatically, regardless if the camera is *RUNNING FORWARD* or *REVERSE*. If compensation is not possible, the COMPENSATION LED will light up red.

IRIS compensation
If *IRIS compensation* is selected, one should be aware that a change of the depth of field will occur. The following table should help you to find out if the intended iris compensation is possible.

SHUTTER compensation
If *SHUTTER compensation* is selected, stroboscopic effect must seriously be considered because a narrow shutter angle (very short exposure time) will reduce the motion blur. If no stroboscopic effect is desired, a narrow shutter angle will strongly limit the freedom to move the camera quickly.

Notice

The SCB will automatically pair the highest speed with a 180° shutter angle and calculate all other shutter angles based on the resulting exposure time.

Examples



SYNCHRONIZATION AND PHASE SHIFTING

The SCB can be programmed very precisely and may therefore be used to synchronize the camera to either a video signal or a computer screen. Moreover, the synchronization of the camera with a signal provided by a projector or another camera is possible. There are three different input signals which the SCB can accept. If a signal is supplied to the VIDEO IN connector and also the SYNC IN connector, the VIDEO IN connector has priority.

- A video signal can be fed into the VIDEO IN BNC connector.
- The ARRI Pick-up Unit can be connected to the SYNC IN connector.

• Any signal from 3 to 30 V with a frequency of 3 to 100 Hz can be fed into the SYNC IN connector.

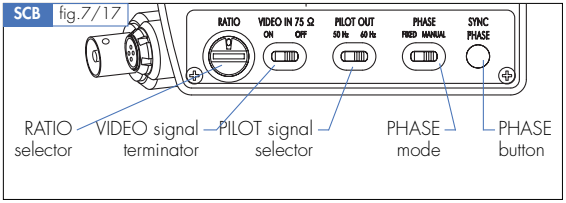

For the SYNC function, a Pick-up Unit connected with the cable (KC 66-S) is used to sense the SYNC signal from cathode ray tube (CRT) monitors – synchronization with TFT screens is not necessary. A similar cable should be used for connecting other pulse generators to the SCB, e.g. a power generator or a film projector.

When synchronizing two or more cameras, one will be the *master* and the other ones will be *slave*.
The KC 78-S cable is connected betwen the CAC connector of the master camera and the SYNC IN connector of SCB linked to the slave camera. If two or more cameras must be synchronized to an external sync reference, e.g. a video monitor, feed either the external video signal to the VIDEO IN connector or the external sync signal to the SYNC IN connector of the SCB linked to the first camera and connect the others as explained above.

With the RATIO switch, one of 5 ratios can be selected: (1/1, 2/1, 3/1, 4/1, 5/2). So the following settings can be selected:

setting	ratio	sync frequency	resulting fps
0	1/1	50 Hz	50 fps
1	2/1	50 Hz	25 fps
2	3/1	75 Hz	25 fps
3	4/1	100 Hz	25 fps
4	5/2	60 Hz	24 fps
5, 6, 7, 8, 9	1/1	3 – 60 Hz	3 - 60 fps

The phase setting determines the start of the exposure for each film frame in relation to when the image is drawn on the video monitor. The visible result is the angled horizontal bar you can see when looking through the viewfinder while the camera is *RUNNING*. First try the position FIXED of the PHASE switch. FIXED is a phase default setting that should work in most cases.

SCB remote sync connection fig.7/18 **Lite**

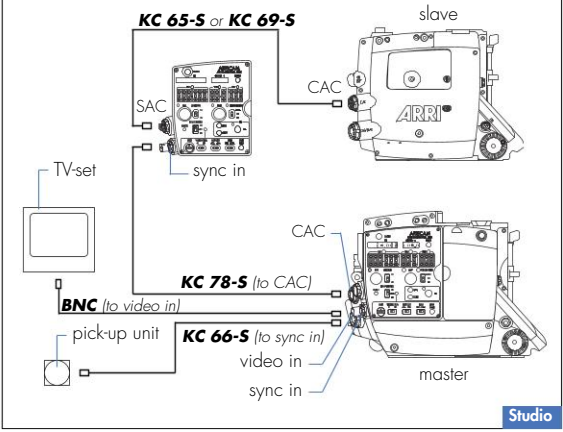

If you still see the horizontal bar, switch to MANUAL and use the PHASE button to move the bar to where it is least visible. The SCB will remember the phase relationship (the position of the bar) between takes.

Exception:

If the RATIO is set to 1/1, then the best film image is usually obtained when the viewfinder image is at its worst. As always, confirm with a film test.

Caution!
No synchronization cable can be longer than 15 m/50 ft. Therefore the Pick-up Unit or the video cable should not exceed this length.

Timing Shift Box (TSB)

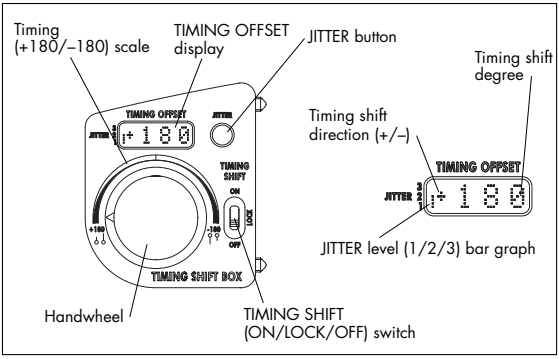

The Timing Shift Box (TSB), allows the creation of a streaking effect by manually adjusting the phase relationship of the mirror shutter to the movement. The timing shift effect can be adjusted from very faint to very strong.
The jitter function introduces a random fluctuation in the effect, resulting in a shimmering variation of the streak's length.

MOUNTING

Like the Manual Control Box, the TSB can be attached directly to the Studio, to the Remote Control Station or connected via cable to the Studio and Lite – see Manual Control Box section of this chapter.

COMPATIBILITY

The TSB can be used simultaneously with the Manual Control Box and/or the Speed Control Box e.g. to combine the streaking effect with a ramping effect.

CONTROLLING THE TIMING SHIFT EFFECT

The white part of the Timing (+180/-180) scale is where the effect covers only parts of the image, the black part is where the effect covers the whole image. The drop shaped labels indicate which way the streaks will go (up or down), and at which edge the effect will start. On the display, (+) shows that the streaks will start on the right edge and go up, (–) while shows the opposite way.

PERFORMING A CONSTANT TIMING SHIFT EFFECT

- Set the TIMING SHIFT switch to ON.
- Adjust the effect levels by turning the handwheel and pressing the JITTER button.
- Set the TIMING SHIFT switch to LOCK. Now the current settings will be memorised and the handwheel as well as the JITTER button will have no control.

PERFORMING A TIMING SHIFT RAMP

- Set the TIMING SHIFT switch to ON.
- A timing shift ramp can be achieved in turning the handwheel while the camera is running.

CONTROLLING THE JITTER EFFECT

Press the JITTER button to change the jitter level. A bar graph to the left of the display shows the JITTER (1/2/3) level. With each press of the button the TSB will step through the 4 levels: 0 (none), 1 (low), 2 (medium) and 3 (high).

Notice

Camera noise may increase when using the jitter effect.

Remote Control Station (RCS)

If the use of the SCB together with the MCB is intended, both components can be fixed on the Remote Control Station.
The mounting of the SCB on the adapter is similar to the one on the STUDIO body.

Remote Control Station (RCS) fig.7/7

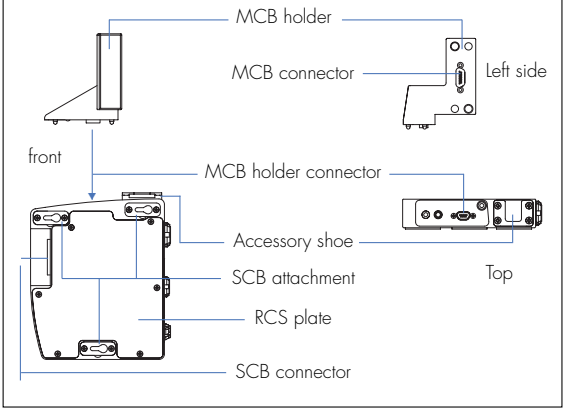

On top of the RCS Plate, a fixture for the MCB Holder as well as an Accessory Shoe is located. After removing the little cover on top of the RCS, the MCB Holder can be fixed with one 3 mm hex screw. The MCB will be mounted on the Holder in the same way it is fixed to the camera.

An SAC plug for connection with a camera, an LDD plug and an WHA-2 connector are located on the RCS right side. A manual remote control unit – e.g. for iris, focus and zoom – mounted on WHA-2 can be plugged on the Remote Control Station.

RCS SCB + MCB – front fig.7/8 right side

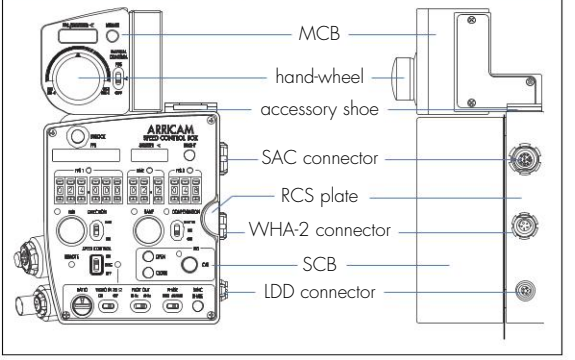

Because the SAC connector of the RCS is similar to the ones of the SCB and the MCB Cable Adapter, the same cables can be used for connecting the Remote Control Station with the camera.

Mounting and Connection

- Mount the SCB to the RCS Plate in the same way as on the Studio.
- Fix the MCB/TSB Holder on top of the RCS with one 3 mm hex screw.
- Mount the MCB or TSB on the MCB/TSB Holder in the same way as on the MCB Cable Adapter.

The ARRI Dovetail System allows placing the RCS e.g. on the camera left side (with Rod Clamp, Rosette Bracket) or to the Lite Camera Handle with the 3/8" Clamp.

The Cables KC 65-S or KC 69-S allows connecting the RCS (SAC connector) with the camera (CAC connector)

Notice

No sync function is possible when using the Cable Drum KC 73-S (50 m/165 ft).

COMPATIBILTY

The Remote Control Station (RCS) allows the use of the following Accessories remotely from the camera:

- Speed Control Box (SCB),
- Manual Control Box (MCB),
- Timing Shift Box (TSB),
- Wired Handset Adapter (WHA-2) with Wireless Focus Unit (WFU-1) and Wireless Zoom Unit (WZU-1) or Wireless Remote Control (WRC-1),
- Lens Data Display (LDD),
- Lens Data Diaplay for Focus Puller (LDD-FP)

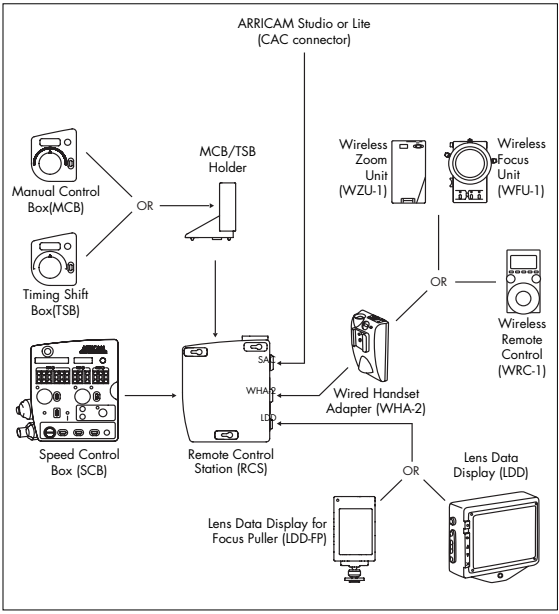

Final Remark

Using Accessory Boxes:

- ***One Speed Control Box is not able to control two cameras simultaneously!***
  Even though it is possible to connect one box to two cameras simultaneously, this must never be done! So for example, if a Speed Control Box is mounted on a STUDIO, do not connect a second camera (e.g. a LITE or a second STUDIO) with a cable to this box!

- ***One camera cannot be controlled by two similar boxes simultaneously!***
  Even though it is possible to connect two similar boxes to one camera at the same time, this must never be done! So for example, if a Speed Control Box is mounted on a STUDIO, do not connect a second Speed Control Box with a cable to this camera.









THE ARRICAM IN-CAMERA SLATE SYSTEM

The In-camera Slate Box

WHAT'S THE MEANING OF THE ISB SYSTEM?

The In-camera Slate Box System (ISB) allows recording of characters – the information usually written on a slate board – in the picture area of the film and, instead of the "clap", to record a visual sync cue provided by a time-code generator built in the In-camera Slate Box. At the beginning and/or end of each take, the camera exposes all slate information (e.g. take identifications) together with the time-code. The take identifications as well as camera status info and further data are fed in the system by means of a handheld computer and by the camera itself.

TIME-CODE BASICS

In order to identify the take of a scene, the board has been invented.
In order to synchronize sound with pictures recorded on two different supports, the clapping of two pieces of wood in front of the camera and near to the microphone has been introduced. And so, for about 80 years, the clap board has been very useful in almost all film productions. Certainly, the camera and the sound recorder must *RUN* synchronously to each other. Therefore, first the pilot cable and later the extremely precise quartz crystal has been adopted to control the speed of both machines.
Being aware that two events – which must be later synchronized in the editing room – happened at the same moment while recorded, it is obviously possible to achieve the synchronization in finding on both media (e.g. 35mm film and sound tape) the time identification (time-code) of the event. And therefore, extremely pre-

cise clocks have been installed in almost all professional sound recorders. Similar clocks – they are called time-code generators – are also present in several camera systems. To be sure that the synchronization of time-codes will go well, it is obvious that all clocks used during shooting, maybe with more than one camera, must be synchronized first. Therefore all these clocks will have to be synchronized with one reference master clock. Between the first orders *ROLL SOUND, ROLL CAMERAS* and during the announcement of the board, and before *ACTION* will be asked, a lot of footage is exposed. In fact, the clapper loader has to read the information written on the board before clapping it. But to synchronize both supports, only the identification and the clap are relevant, and this can be read in just a few frames!

Notice

The idiom JAM means for film people mostly that film has stuck either in a magazine or in the camera, so it is a problem.

The same idiom JAM is used in the electronic world – and used in this chapter – defines a synchronization operation, and this is absolutely not a problem.

THE ARRICAM IN-CAMERA SLATE SYSTEM

The ARRICAM In-camera Slate System has been conceived on the practice of clapping a board. All the board information entered with a small handheld PC in the
In-camera Slate Box is, together with some camera status information, exposed on a few frames at the beginning and/or end of each take. This data are entered with the time-code generated in the In-camera Slate Box (ISB).

The In-camera Slate exposing is enabled by a small Exposure Module consisting of tiny LEDs in a matrix below the gate aperture. To be legible easily, the slate is exposed only while the shutter is closed to 0° (the SHUTTER display/s will show **ISB 0**). As soon as the In-camera Slate has been exposed, it will fade out and the shutter will open instantly to the preset angle. Consequently, after *ROLL CAMERAS*, the (Assistant) Director must just wait for a very short moment before saying *ACTION!*

A head slate uses around 20 empty frames and 18 frames of data when the camera is started and about 26 when it is stopped. A tail slate takes up no frames when the camera is started, but around 40 when it is stopped.

In-camera Slate Box (ISB) fig.8/1

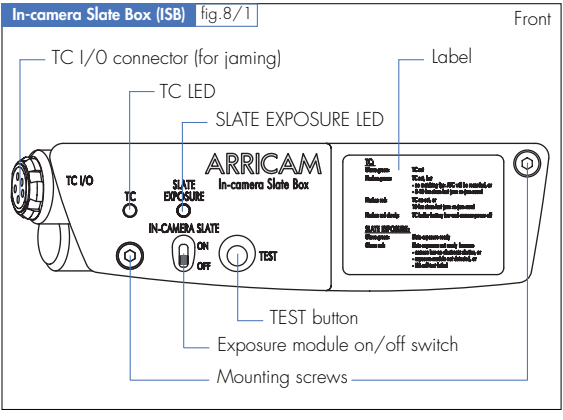

Time-code graphic fig.8/2

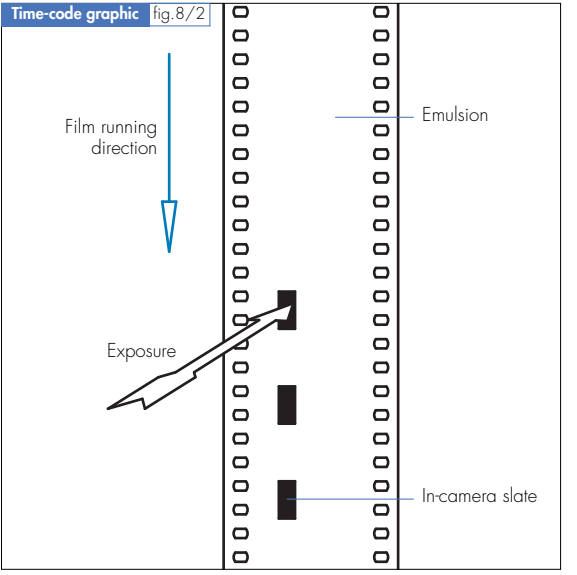

In-camera Slates fig.8/3

Examples of in-camera slates

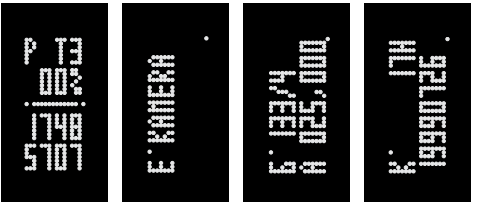

THE ARRICAM IN-CAMERA SLATE IN POST PRODUCTION

The In-camera Slate is a legible and machine readable text within the film frame. Therefore In-camera Slates can be used in post-production in the same way as conventional slates: the editor can read and use the slate and time-code information. It is now possible to work with a time stamp at any filming frame rate, since the In-camera Slate System always guarantees clear identification. Automatic reading of In-camera Slate information in the electronic post-production process is also possible with a special ARRI Optical Character Recognition Software (OCR). The resulting Take-list can be directly transferred to non-linear editing systems. The time-code information can also be used for syncing audio.

ADVANTAGES OFFERED WHEN USING THE IN-CAMERA SLATE SYSTEM

- the In-camera Slate is always on the film and always clearly readable;
- consumption of film material is reduced since the In-camera Slate exposes only onto a few frames;
- post-production is possible without additional tools since the In-camera Slate works almost like a conventional slate;
- in video post-production, an automatic Take-list can be created with the help of an automatic slate reader (OCR). There is no longer the need to log the data while transferring the film to video.

COMPATIBILITY

The In-camera Slate Box (ISB) fits on both ARRICAM Studio and ARRICAM Lite. On the LITE, the LT Lens Data Box must be present to mount the ISB. STUDIO and LITE accept the same Exposure Module.

The following five components allow the use of the In-camera Slate Box System:

- The In-camera Slate Box (ISB) contains the electronics, the connectors, the switch, the LEDs as well as the time-code generator and its supporting batteries.
- The handheld computer (with its own serial connector cable) is used as a remote control unit for entering and editing data in the ISB System.
- The connector cable 9-pin serial plug to ISB (16-pin Fischer plug).
- The Exposure Module which has to be installed in the camera by an ARRICAM Maintenance Technician.
- The In-camera Slate reader OCR Software for the post-production houses.

THE IN-CAMERA SLATE BOX AND THE SPEED CONTROL BOX

Using the In-camera Slate Box together with a Speed Control Box is only requested when other frame rates than 24, 25 or 30 fps are needed and the camera is not fitted with the Extended Camera Control Panel. This Panel as well as the SCB enable presetting frame rates like 23.976 fps or 29.970 fps.

MOUNTING THE IN-CAMERA SLATE BOX ON THE STUDIO

First turn *OFF* the camera MAIN switch, unscrew the two retaining 3 mm hex screws and remove the protecting cover. Being sure that both connectors are clean, mount the ISB carefully on the STUDIO and fasten the two mounting screws.

USING THE IN-CAMERA SLATE BOX WITH THE LITE

The ISB cannot be fixed on the LITE itself but must be attached to the LT Lens Data Box (LT-LDB). When the LT- LDB is already attached to the LITE, unscrew the single 3 mm screw, remove the cover, and – being sure that the camera is not powered – mount the ISB and tighten the two screws.

THE POWERING OF THE IN-CAMERA SLATE BOX

The ISB is permanently powered as long as it is connected to a powered camera, irrespective of the ON or OFF setting of the camera MAIN switch.
Even though the camera is not powered or the In-camera Slate Box is not connected to the camera, the ISB built-in time-code clock needs power. To keep it running while the camera is disconnected from power, two AA 1.5 V batteries must be inserted into the battery compartment located on the ISB right side. If the TC LED slowly flashes red, these batteries need to be replaced. If the TC has been re-jammed more than 10 hours ago the TC LED glows red. Whenever this LED glows red, you have to re-jam the ISB.

Caution!

If the camera power is switched OFF and ON, the TC starts at 00:00:00:00 but this new TC is not usable.

As soon as the TC has been re-jammed the TC LED will change to green. Independently from power supply all other data of the ISB are saved in it's internal flash memory.

ISB fig.8/4

Right side

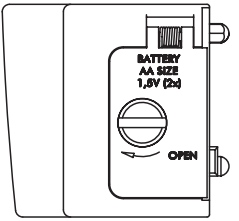

Studio – ISB mounting fig.8/5

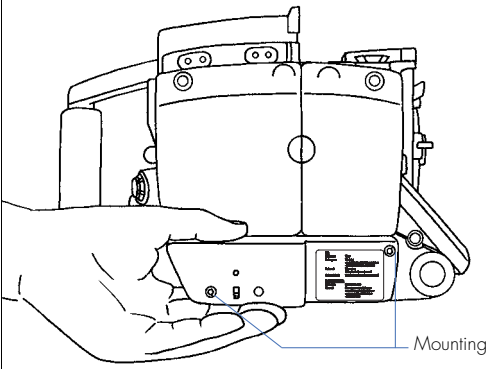

Lite – ISB mounting fig.8/6

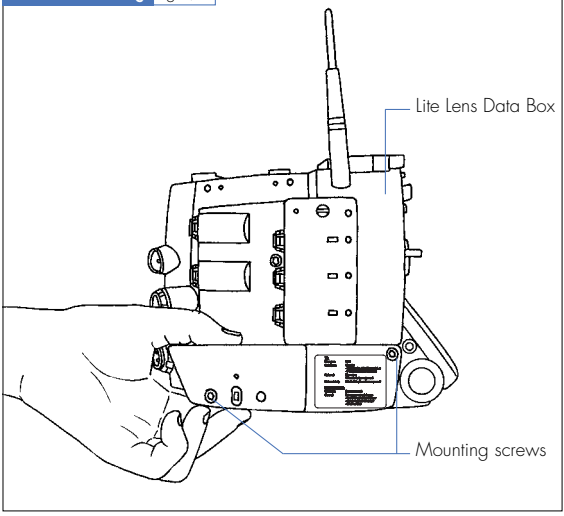

THE CONNECTORS, CONTROLS, LED DISPLAYS AND LABEL ON THE IN-CAMERA SLATE BOX

The ISB Camera Connector

On the rear of the ISB, a connector will link the camera electronics with the In-camera Slate System. Before installing the ISB, it is necessary to switch the camera MAIN switch *OFF*. Be careful when mounting or removing the Box from the camera body or from the LT Lens Data Box, the connection must happen smoothly.

The TC I/O Connector

The 5-pin Lemo connector must be used exclusively for connecting the In-camera Slate Box with a master clock (Ambient, Soundrecorder, etc.).

The In-Camera Slate System Switch
The time-code functionality is provided as soon as the ISB is connected to a camera. When setting the IN-CAMERA SLATE switch to *ON*, the functions of the Exposure Module are provided. This switch is not powering the ISB.

The Label
A label on the In-camera Slate Box explains the various states of the two status LEDs.

ISB Label fig.8/7

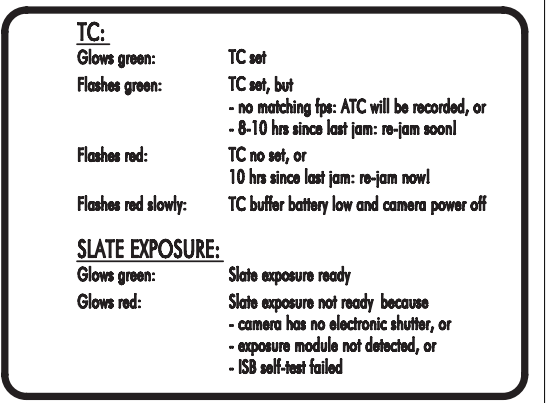

Ⓡ = *LED glows red*	Ⓖ = *LED glows green*
(Ⓡ) = *LED blinks red*	(Ⓖ) = *LED blinks green*
⟨Ⓡ⟩ = *LED blinks slowly red*	

The TC (Time-code) LED

Ⓖ The time-code is set and the In-camera Slate works correctly.
One of the following frame rate has been preset: 24 fps, 25 fps or 30 fps in realtime mode, 23.976 fps or 29.970 fps in non-realtime NDF (Non Drop Frame) mode.

(Ⓖ) Time-code is set, but either, none of the matching frame rates (see above) has been selected – or the last jam-syncing was done 9 to 10 hours ago.
REMEDY: re-jam soon!

(Ⓡ) The time-code has not been set or the last jam-syncing was done more than 10 hours ago.
REMEDY: re-jam soon!

⟨Ⓡ⟩ The capacity of the supporting batteries is low or the camera is not powered.
Replace the supporting batteries (2 x 1.5 V AA) – see fig. 8/4.

Notice

Changing the batteries while the ISB is mounted on a powered camera will keep up the TC function. However the LED will stop blinking after one minute if the new batteries are full.

Slate Exposure LED

G The slate exposure is ready

R The slate exposure is not ready because either the Exposure Module has not been detected and/or the ISB self-test failed.
REMEDY: Check the equipment and/or consult an ARRICAM Maintenance Centre.

The In-camera Slate System TEST Button

As long as the TEST button is pushed while the camera is *Standby*, the Exposure Module will be shortly activated in order to allow checking not only if this Module is installed but also if the LEDs correctly light up. Furthermore, information about the actually saved slate information will be displayed on a video monitor and the ISB battery voltage will be shown on the FPS display(s).

AND NOW, AGAIN A BIT OF THEORY

What is a Master Clock?

Usually, the sound recorder has a built-in time-code generator. Connecting a cable between the sound recorder and the ISB connector will allow simple and efficient jam-syncing. If this is not possible, use an independant master clock. Besides others, the Ambient Clockit Controller ACC 101 portable TC generator/tester is a master clock which offers very good compatibility with the ARRICAM In-camera Slate System. Its controller is an extremely accurate portable master clock and time-code generator/reader which can be used to synchronize (jam), read, identify, and compare all time-codes. All frame rates are catered for, and the frame rate can be changed without loosing time of day, enabling a camera *RUNNING* at 24 frames and a recorder *RUNNING* at 25 or 30 frames to be jam-synced.

Userbit format options allow easy entering of data in the form required. With the added facility of internal Xtal calibration, it can be used as a master clock to calibrate time-code recorders and film cameras in the field.

What does Jam-syncing time-code mean?
In a basic SMPTE synchronization scenario, time-code is fed from one device (the master) to a second device (the slave). The slave device follows the time locations as transmitted by the master device. If the master device counts one hour and thirteen minutes (expressed as 01:13:00:00; Hours:Minutes:Seconds:Frames), the slave device follows it there. The problem arises when the master device's SMPTE time-code has an error in it. In most situations, the slave device would not know what to do for a split second since it has missing instructions from its host. It would stutter or stop completely. By using jam-syncing, the slave device can be instructed to ignore small dropouts of time-code from the master, thus ensuring smooth synchronization. To do this, it generates its own time-code whenever the master's time-code is missing. Jam-sync is usually an optional mode that the user can select.

What is the difference between Single and Continuous Jam-syncing?
While shooting, the TC OUT connector of a master clock is permanently wired with the TC IN connector on the ISB. This master clock (it can be integrated in the sound recorder) provides continuously a sync reference signal to the ISB. So the ISB time-code is synchronized permanently with an external TC device – Continuous Jam-syncing mode is applied. The TC cable must be connected all the time.

After having synchronized just once the ISB (this operation lasts about 1 sec.) the cable between the ISB and the master clock is disconnected. The camera remains synced with the ISB buit-in time-code generated signal. This method is called Single Jam-syncing. The TC cable can be removed.

The high accuracy of the Single Jam-syncing method combined with the freedom of working wireless establishes this method as a default mode. Continuous Jam-syncing is only needed e.g. in case of play back filming where a sound device is wound back and forth and requires the camera time-code to follow.

Use the handheld PC for selecting the syncing mode.

PRACTICAL ADVICES ON HOW TO USE THE IN-CAMERA SLATE SYSTEM

Notice

We suggest ISB users to involve the lab and the post-production house in the preparation and the testing of the equipment. Furthermore, it is recommended to assign one person (camera, sound or video dept.) responsible for all In-camera Slate operations.

Before starting a production, it is important to check the equipment:

Test the system as follows:

1. Set the camera MAIN switch to ON.
2. Set the In-camera Slate switch to ON.
3. Push the TEST button on the In-camera Slate Box – both LEDs should briefly fade out and then glow green or red. If the SLATE EXPOSURE LED glows red,

a problem occurs. The cause will be displayed on a video monitor – most probably no ISB Exposure Module is installed in the camera.

4. Go to the other side of the camera and open the camera door. Rotate the movement locking lever clockwise to slide the movement to its rear position. Look at the lower part of the movement (under the slot for the inside pull down claw). Reach around the camera, and push the TEST button again. The Exposure Module LEDs, which is located right behind the ISB window in the Aperture Plate, will flash 5 times, and you should see red reflections of these flashes on the lower part of the movement. If you do not see these flashes, the Exposure Module may not be installed or is damaged.

When starting a shooting day:

1. The Focus Puller or another member of the camera department together with friends at the sound department and most probably also at the video department will have to synchronize all used devices with one master clock. This operation is often called jam-syncing.
2. The Loaders will have to enter the film sensitivity (ASA) into each magazine. Only when the Cinematographer decides to change the laboratory process, the ASA rating will have to be re-adjusted accordingly.
3. The synchronization of the camera movement with the In-camera Slate time-code generator will occur as soon as the ISB is connected to the camera.



Caution!

However, the adequate synchronization mode can be selected by means of the Video Assist configuration menu VIDEO CONFIG – see chapter 5 page 72.

- *camera synced OFF: the camera is not synchronized by TC nor by the Video Assist. It will be synchronized by the SCB if selected at this box.*
- *camera synced VID: the camera is synchronized by the Video Assist.*
- *camera synced TC: The camera is synchronized by the TC of the ISB. This mode allows also to synchronize the Video Assist with an external signal.*

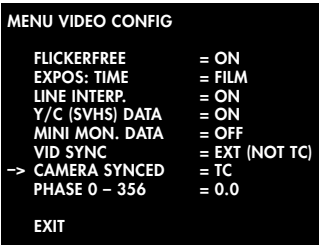

4. Last but not least, one must feed all slate information into the In-camera Slate System before shooting. Therefore a connection to a consumer handheld personal computer running windows CE 3.0 (or later version) is necessary.

Caution!

- *At the beginning of each shooting day and after about four hours (after the break for lunch), the camera(s) and the sound recorder have to be re-synchronized (re-jam for short) with the master clock.*
- *The slate exposing works at any camera speed and shooting direction, but you must be sure to set the film speed (ASA) on the magazine – see chapter 2, page 80 – to have the correct exposure.*

Convention:
The following description is based on the use of an iPAQ handheld PC from Compaq® together with an external flash card. On this flash card the ARRICAM ISB Remote Control Software V 1.020 has been installed by the ARRICAM Maintenance Centre. In other handheld PC, the program can be saved on the integrated ROM memory. If the program ARRICAM does not appear in the start menu of the iPAQ handheld PC it has to be reloaded (after more than about two weeks without power). The procedure depends on the type of handheld PC used. Please see the document the ISB Remote Control Software – appendix 1, Restoring the Program from Flash. The document is delivered with every handheld PC and can also be downloaded from the ARRI.com web page. More information about the ISB Software, the start menu and the restore procedure can also be downloaded from this web page.

THE SYNCHRONIZATION (JAM-SYNCING) OF THE IN-CAMERA SLATE BOX

Connect an external time-code source (e.g. audio recorder, master clock) to the TC I/O connector on the In-camera Slate Box (pin1 = GND, pin2 = LTC in, pin5 = LTC out). As soon as a jam-syncing is completed, the TC LED should glow green. For more information see the manual of the master clock.

ERRORS AND WARNINGS

Errors like e.g. "**no Exposure Module detected**" or "**ISB selftest failed**" and warnings like "**Battery of ISB is low**" or "**TC is not set**", will be encountered on the Main Menu and explained in the Error/Warning Sub-menu. You can also read this information on the video monitor.

Exception: Loss of communication
Whenever the communication with the ISB System is lost, the ISB Remote Control Software displays <void> in the text fields of the Main Menu. All data entered or edited before the lost of communication remains in the ISB memory. Changes of the status of the camera (*RUN/STOP*) which are saved in the ISB will be correctly reported to the iPAQ as soon as the connection is fixed.

SETTING UP

Use the iPAQ to enter new information or edit existing information that is stored in the In-camera Slate Box. See the manuals of the iPAQ and the one of Windows CE 3.0 for more information about the Mobile Computing System. The communication is based on the RS 232 connection.
Before entering or editing data, you must first connect the iPAQ with the ARRICAM Camera – not with the In-camera Slate Box!

1. Set the camera MAIN switch to *OFF*
2. To connect the iPAQ to the ARRICAM Camera, two cables are necessary: Plug the round 16 pin male Fischer connector of the ARRI cable KC-H-1 into the Camera Accessory Connector labelled CAC. At the other end, a DSUB 9 pin male connector will be plugged into the iPAQ own cable. The second

cable, which is an accessory of the iPAQ, will have on one end a DSUB 9 pin female connector and on the other one the special iPAQ connector.

3. Set the camera MAIN switch to *ON* and turn the iPAQ *ON*. The IN-CAMERA SLATE switch doesn't have to be set to *ON*.
4. Touch the Windows icon on the top left of the screen to display the Main Menu. Choose the ARRICAM icon to launch the controller program.
5. Once the program is running, the slate information stored in the ISB is displayed on the iPAQ screen which popped up first the Main Menu.

OPERATION

By following the navigation of the menu, enter the slate information by using the virtual keyboard or the hand-writing function of the iPAQ.

Some of the slate information including e.g. production name, director's name, etc. will be set once at the beginning of the production. In similarity to the traditional board, all scene identification numbers must be entered whenever a scene number changes. The preset take number automatically increases by one after each take (camera *RUN* and *STOP*).

Notice

- *Do not forget to check the power condition of the iPAQ!*
- *Do not forget to set TC at the video configuration menu!*
- *Be aware that after each take, take numbers will be incremented automatically by the In-camera Slate Box – if they are not changed manually with the iPAQ!*

The Main Menu

The Main Menu is divided into four Sub-menus: CURRENT TIMECODE, NEXT SLATE, TAKELIST (LAST TAKE), and ERRORS/WARNINGS. For each Sub-menu the most important information of the respective ISB System are shown, either in a Dialogue Box or an Info Box.

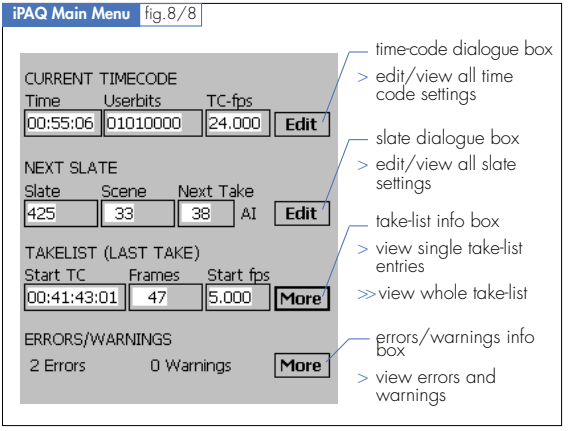

The function fields

Edit	None of the fields of the Main Menu is editable. For changing time-code or slate settings the field **Edit** of the CURRENT TIMECODE and NEXT SLATE Sub-menu must be activated.
More	The two **More** buttons open Dialogue Boxes for browsing the take-list entries and for inspecting errors and warnings reported from the ISB System.

Time	the value of the actual time-code.
Userbits	the value of the actual userbits.
TC-fps	the actual frame rate of the TC generator.
Slate	Slate identification entred by the user.
Scene	Scene identification entred by the user.
Next Take	Suggested next take number incremented by the System.
AI	Shows the automatic incrementation of the take number by the System.
Start TC	Starting time of the last take.
Frames	The frame amount of the last take.
Start fps	The frame rate at starting of the last take.
Errors	Number of errors reported by the ISB.
Warnings	Number of warnings reported by the ISB.

Depending on the kind of data you would like to enter or edit, touch the adequate **Edit** field to enter the Sub-menus:

- To edit time-code relevant data select the CURRENT TIMECODE Dialogue Box.
- To edit the scene/take relevant identification select the NEXT SLATE Dialogue Box.

USING THE DIALOGUE AND INFO BOXES

Using the **Edit** field of the CURRENT TIMECODE Sub-menu leads to a Dialogue Box where several figures and modes are displayed and also may be changed. When a field of the Dialogue Box is activated by touching it, changes can be done. The value can be changed by using either touching arrows, writing in the field or selecting an option in a drop menu.

Do not forget to touch **Apply** for saving your selection into the ISB memory!
If you have to change several data at once in a Dialogue Box, only one touch on **Apply** at the end of the manipulation is necessary.

As soon as **Apply** is touched, a little clock icon will show that the computer is updating.

By touching **Back** you will return to the Main Menu.

Caution!
When Back is touched, no downloading of the new settings to the ISB System will occur. Time-code can only be (re-)synchronized by manual editing or by re-jamming.
*Pushing the **Apply** field is not sufficient!*
Please note that jamming time-code is more accurate than editing via handheld PC.

iPAQ Current Timecode Dialogue Box fig.8/9

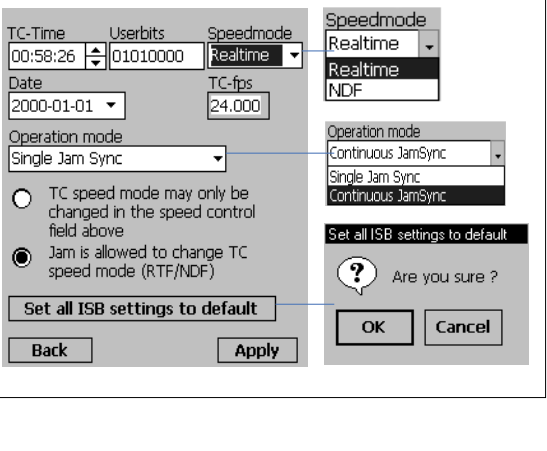

THE CURRENT TIMECODE DIALOGUE BOX

Before the Dialogue Box opens, the current time-code settings are uploaded from the ISB System to the ISB Remote Control Software.

TC-Time	Shows the current time of the ISB time-code clock. This field is refreshed every second. By touching the TC-Time field, it will be activated and you will be able to change the time.
Userbits	Shows the actual settings that can be changed here.
Speedmode	Shows the current setting of the speed mode. It is possible to toggle between Realtime and NDF (Non Drop Frame) mode.
Date	Shows the current setting of the date of the ISB System. The date may be changed between 1.1.2000 and 31.12.2099
TC-fps	Shows the current speed settings of the ARRICAM. This field cannot be edited.
Operation mode	Allows to toggle the sync mode of the ISB System. It is possible to toggle between Continuous Jam-sync and Single Jam-sync.
Toggle sources	There are two sources for changing the speed mode: Jam or the local input selected in the Speedmode field. The two little circle fields allow to toggle between these two modes.
Set all ISB settings to default	Touching this field resets all ISB settings. The user must confirm this action. After selecting **OK** all settings of the Dialogue Box are refreshed.

THE NEXT SLATE DIALOGUE BOX

Before the NEXT SLATE Dialogue Box opens the current slate settings are uploaded from the ISB System to the ISB Remote Control Software. Due to the limitation of the Exposure Module, only the following characters can be used to enter names and identifications in the text fields:

A	B	C	D	E	F	G	H	I	J	K	L	M
N	O	P	Q	R	S	T	U	V	W	X	Y	Z
@	`	"	^	+	–		=	|	.	,	;	:
1	2	3	4	5	6	7	8	9	0	'	*	!
{	[	(	/	<	>	\	)	]	}	-	_	?

iPAQ Next Slate Dialogue Box fig.8/10



Field	max. numbers of characters
Production	32
Slate	4
Scene	4
Next Take Id	4
Director	32
DoP	32
Roll	4
Production unit	1

Next Take Id	This field displays the Take Id for the next take. The field is refreshed every 2 sec. because the Take Id is auto-incremented with every take done by the camera. The field accepts numbers in the range from 0 to 9999.
Flag: Take Id was auto-incremented	Normally the Take Id is auto-incre mented by the ISB System after each take completed by the camera. For these cases a string AI is displayed right to the Next Take Id field. After a take has been completed the Take Id is always in this auto-incremented mode. If the user overwrites the auto-incremented Take Id using the Next Take Id field, downloading the new Take Id by using **Apply**, the next take will be numbered with the user defined Take Id. The Flag AI then disappears until a new take is completed by the camera. The user defined Take Id will also be taken as a new base for auto-incrementing the Take Id.
Slate exposure at start or end of take	The two little circle fields allow to toggle between two modes: **Slate exposure at start of take** or **Slate exposure at end of take**.
Clear	**Clear** deletes all slate settings of the ISB System. This action has to be confirmed by the user. After clearing the settings the Dialogue Box is completely refreshed.

THE TAKELIST (LAST TAKE) INFO BOX

When the Info Box opens, the last take entry is displayed. This Info Box allows to browse through the Take-list stored in the ISB System: The ISB System adds an entry to the Take-list each time a take is completed by the ARRICAM Camera.

THE TAKELIST BROWSER INFO BOX

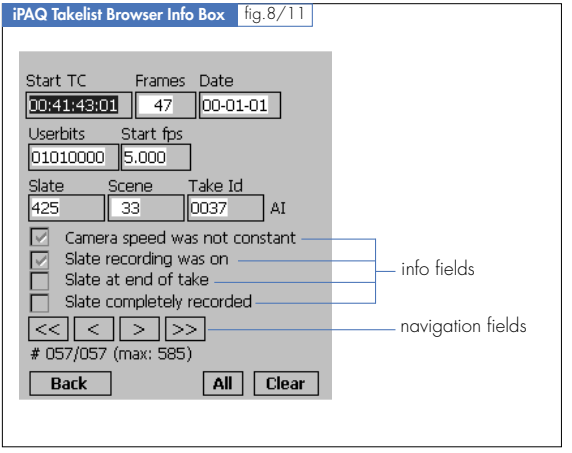

Start TC	Time-code at start of take.
Frames	Amount of frames within take.
Date	Date at start of take.
Userbits	Userbits active at start of take.
Start fps	Frame rate at start of take.
Reverse Run	If Reverse Run is displayed, it shows that the this take has been shot REVERSE.
Slate	Slate text has been recorded at the beginning and/or end of the last take.
Scene	Scene text has been recorded at the beginning and/or end of the last take.
Take Id	Counted number of take.
AI	When AI is displayed, the auto-increment function is active.

The info fields

Arising small flags in the square fields show actual warnings.

Remark: If the ISB is switched *OFF*, no slate has been exposed, so none of these flags will appear. But the ISB will continuously record the take counting and feed this information into the iPAQ.

Camera speed	The frame rate was not constant during the take. The frame rate at start is displayed in the field Start fps.
Slate recording	The exposure function was turned *ON* (ISB switch) and the In-camera Slate has been exposed at the beginning and/or at the end of the last take.
Slate at end of take	If there is a Slate exposed only at the end of the take, the flag Slate at end of take is on.
Slate completely recorded	The In-camera Slate has been correctly exposed.

The navigation fields
Use these arrow keys to navigate within the TAKELIST BROWSER Info Box. Which take is currently displayed can be seen in the status line below the arrow keys. The first figure is the number of the actually chosen take. The second figure is the sum of recorded takes. 585 takes is the maximum capacity of the ISB memory.
Example: # 006/008 (max: 585)
The displayed data are related to the take 006 of 008 takes.

If the TAKELIST BROWSER Info Box is full and you intend to record more takes, an overflow occurs. In this case, the oldest recorded takes are deleted.

All	All opens a new Info Box where the recorded takes are listed in a table called TAKELIST TABLE.
Clear	Clear deletes all take-list entries of the ISB System and return to the Main Menu. This action has to be confirmed by the user. After clearing the settings the Info Box is completely refreshed.

TAKELIST TABLE INFO BOX

The info about each recorded take is displayed in 13 columns.
Because the TAKELIST TABLE Info Box is larger than the iPAQ screen, scrolling vertically will show all saved takes.
In scrolling horizontally, about 4 columns of 13 will be displayed simultaneously.
Move the horizontal scroll bar to leaf through the table.

iPAQ Takelist Table Info Box fig.8/12

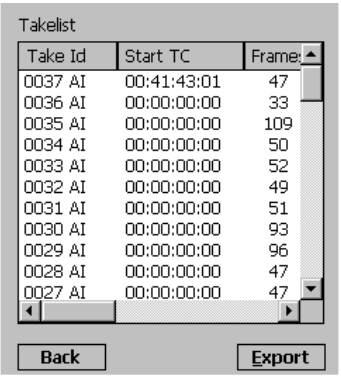

Userbits	Complementary information entered in the System by the user.
Take Id	The Take Identification number.
Start TC	The time-code at the beginning of the shooting.
Frames	Numbers of frames of this take.
Date	Date of shooting.
Fps	Frame rate preset at the beginning of the shooting.
Slate	Slate number entered either by the user or automatically incremented by the ISB.
Scene	Slate number entered by the user.
R. (Reverse)	The take has been shot in *REVERSE* mode.
S. (Speed)	Frame rate has not been constant during take.
S. (Slate)	In-camera Slate exposing function was *ON*.
E. (End)	Slate at end of take.
C. (Complete)	Slate has been correctly exposed.

USING THE TAKELIST (LAST TAKE) INFO BOX

- By touching a selected entry, the TAKELIST (LAST TAKE) fades out and the info about this entry is displayed on the TAKELIST BROWSER Info Box.
- By touching **Back** the selected take fades out and info about the last recorded take is displayed on the TAKELIST BROWSER Info Box.
- By touching **Export** the TAKELIST SAVE AS Info Box will appear. This Info Box enables the export of the Take-list into an ASCII-file (on the handheld computer). This file may be transferred to any PC using the program "Active Sync" (part of the iPAQ package) and the serial cable (also part of this package).

THE TAKELIST SAVE AS INFO BOX

iPAQ Takelist Save As Info Box fig.8/13

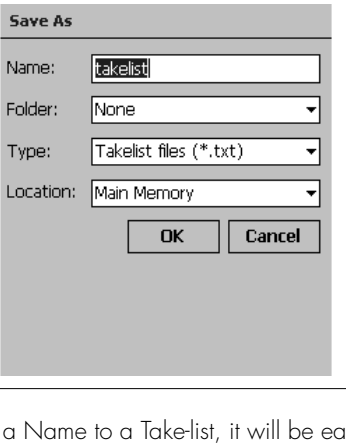

- In giving a Name to a Take-list, it will be easy to identify it later.
- In saving the Take-list into a dedicated Folder, will make the search of it easy. Selecting "None" means

storing the file in the root of the "\My Documents" Folder.
- Select *.* if the extension of the file specified in the Name field shall be used.
- When saving a Take-list, you may select between two saving Locations:

On iPAQ-Versions without internal flash memory: Select "Main Memory" or "Storage Card" if a flash card is installed.
On (newer) iPAQ-Versions with internal flash memory: Select "Main Memory" or "iPAQ File Store".

THE ERRORS/WARNINGS INFO BOX

This Info Box shows the errors and warnings generated by the ISB System. Touch the entries to display the individual error/warning text in an Info Box.

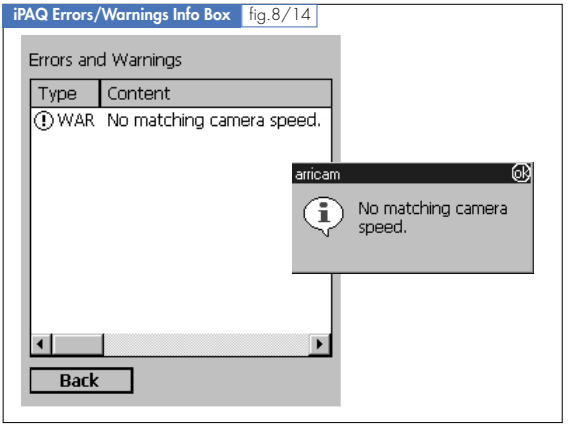

iPAQ Errors/Warnings Info Box fig.8/14

In case of problems, the following messages can appear:

iPAQ Errors/Warnings Info Box fig.8/15

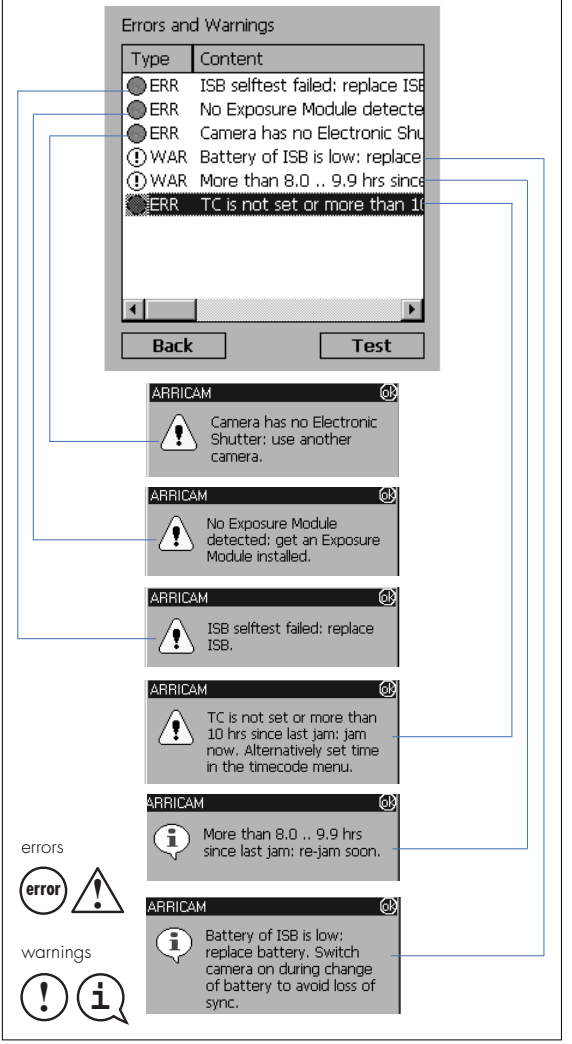

iPAQ Error/Warning Message fig.8/16

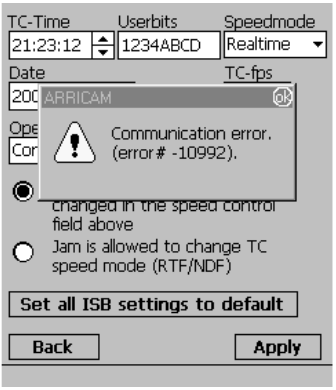

If a Sub-menu is active (the ERRORS/WARNINGS Info Box excepted) and the communication is lost, an Error/Warning Message appears and the program returns to the Main Menu.

Recovering

The program constantly trys to reestablish communications. As soon as data transfer is possible again, the program refreshes the entries in the Main Menu and processes user actions as normal.

No communication at start of program

If there is no communication at starting the program, an Error/Warning Message is displayed and after this the Main Menu appears with all entries set to <void>.



THE ARRICAM CAMERA SUPPORTS

The Camera Supports

This chapter is dedicated to the various accessories which make the handling of the ARRICAM Cameras safe and comfortable.

Preliminary remarks

All parts of the ARRICAM Camera Support System should be handled with the same care as the camera bodies themselves.

When mounting the different handles, be sure that they fit firmly but do not use unnecessary force.

- *Use an 8 -10 mm (5/16") flathead long shaft screwdriver for mounting/removing the Power Bridgeplate, the Baseplate, the Riser Baseplate or the Magazine Stabilization Bracket.*
- *Use a 5 mm metric hex wrench for mounting/removing parts of the Carrying Handle's System, e.g. a Handle or an Accessory Shoe.*
- *Use a 3 mm metric hex wrench for mounting/removing all support components on/from the cameras.*

Notice

Even though the Carrying Handles provide 3/8'' threaded holes, no heavy items should be attached there.

CARRYING HANDLES

Standard Carrying Handles

Each camera type has its own, none interchangeable "standard" Carrying Handle. The Studio Camera Handle as well as that of the Lite are fixed to the camera right side by means of 3 mm hex screws.

- Studio Camera Handle
  The front and the rear Handle can be removed and fixed in other positions on the Attachment Cubes. To do so, enter a long 5 mm metric hex wrench in the opening of the Handle to unscrew/screw the bolt. The Studio Camera Handle is fixed to the camera body with three 3 mm hex screws. By putting the metric hex wrench in the access holes of the Studio Video Assist, mounting or removing of the Studio Camera Handle on/from the Studio is possible.

Studio Camera Handle mounting fig.9/1

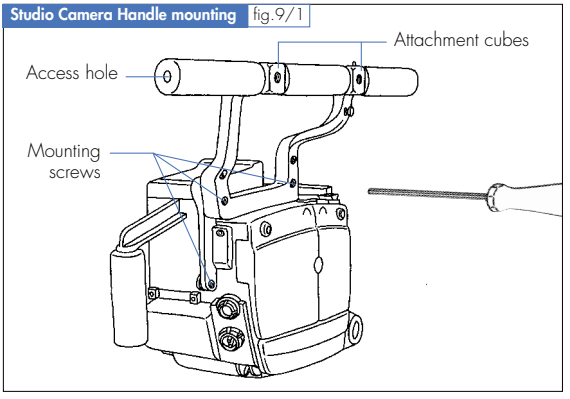

- Lite Camera Handle
  Besides being secured by two retaining screws, the Lite Camera Handle also slides into a holder on the Lite top. The two knobs loosen rosettes enabling the optimization of the carrying balance by positioning the Handle over the centre line of the camera.

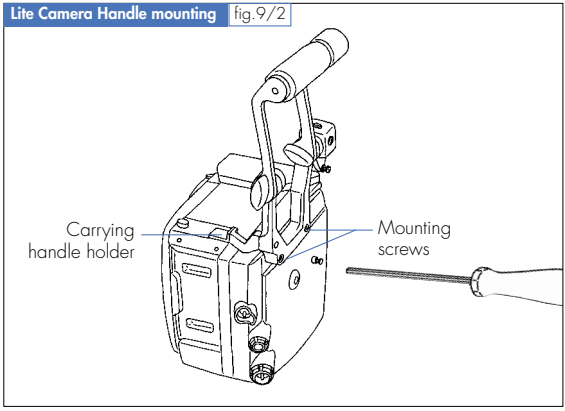

Centre Carrying Handles

Because both cameras can be configured in several ways, some configurations will not allow using the "standard" Handles but require other ones.

- Lite Centre Handle
  When the Studio Viewfinder or the Studio100% Video Top equipped with its Video Assist is mounted on the Lite, only the Lite Centre Handle can be used. This Centre Handle is mounted on top of the Lite body.

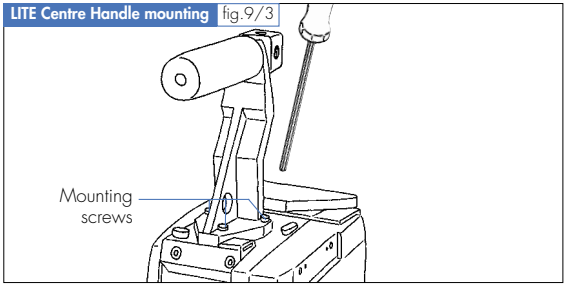

- Studio Centre Handle
  When the Lite Viewfinder or the Lite100% Video Top equipped with its Video Assist is mounted on the Studio, the Back Load Adapter must be used without its own Handle. See chapter 2 page 94 how to remove the Magazine Adapter's Handle. The Studio Centre Handle should then be fixed on both sides of the Studio's body as well as on the Magazine Adapter.

ACCESSORY SHOE and SHOE EXPANDER

Attachment Cubes with 3/8" threaded holes are integrated in the Carrying Handles. Either Handles or little spare Accessory Shoes can be mounted there by means of a 5 mm metric hex wrench.
To double the possibility of mounting accessories on a shoe, a Shoe Expander can be slid into the shoes provided on the Frameglows, Studio Readout and other components.

Studio – Accessory Shoe mounting/Shoe Expander fig.9/4

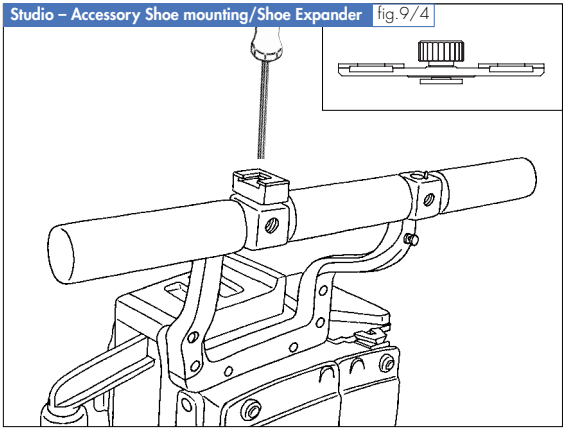

POWER BRIDGEPLATE

Specially conceived for both ARRICAM Cameras, this baseplate for 19 mm Support Rods is equipped with two 24 V dc outlets. On the base of both camera bodies, a cover plate can be slid away to enable the contacts of the ARRICAM Power Bridgeplate to receive power supply via the camera e.g. battery.

Studio – Camera Base fig.9/5

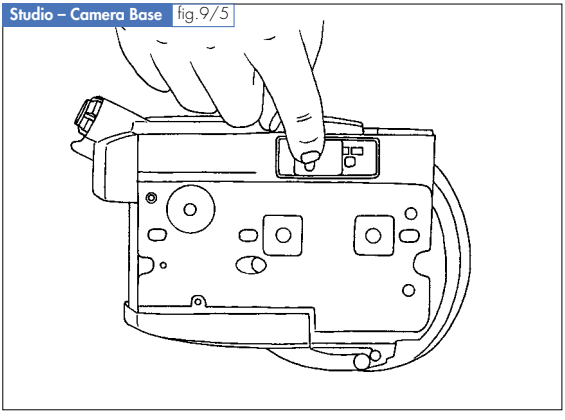

Power Bridgeplate mounting fig.9/6

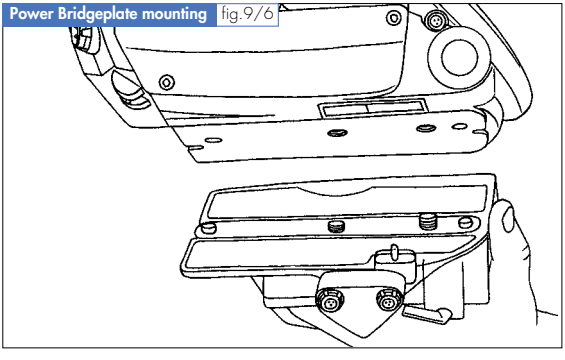

Caution!

1. *Even though the two 24 V outlets look similar to the camera's RS connectors, no remote switch can be plugged there because the RUN/STOP functionality is not supported.*
2. *The power delivered by the two connectors has the same voltage as the power supply source (Battery or mains Power Supply Unit). Because the total power supplied by the connectors is limited by self resetting fuses, be careful that too many accessories are not connected to the camera simultaneously. In case a problem occurs, e.g. a short circuit caused by a defective accessory, the self resetting fuse will stop the power to the connectors. In this case, see chapter 10 – Power Management, page 362.*

The ARRICAM Power Bridgeplate allows filming in the Standard 35 or Super 35 formats.
The current position, STANDARD or SUPER 35, is displayed by two index arrows on the integrated Compensation Bar. The Power Bridgeplate can be converted to Super 35 as follows:

Power Bridgeplate mounting fig.9/7

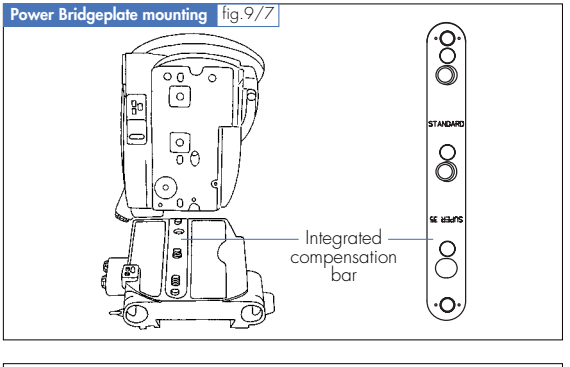

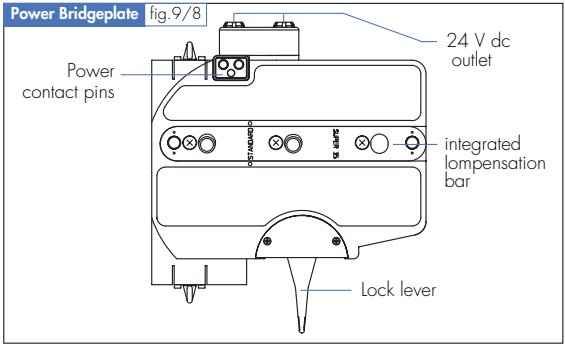

1. Remove the three screws with a Phillips screwdriver No 2.
2. Turn the integrated Compensation Bar 180° and screw tightly in this position.

Caution!
It is crucial to check if the setting of the integrated Compensation Bar corresponds with the format set on the camera (e.g. SUPER 35).

Notice
The ARRICAM Power Bridgeplate cannot be used with other cameras but many other ARRI Baseplates can be used with ARRICAM Cameras.

CAMERA HANDGRIPS

In order to operate the ARRICAM Cameras from the shoulder, the operator can choose between two options:
- to take the camera on the shoulder and to hold it by means of a camera handgrip attached to the camera own rosette joint on the right side.
- to use the Shoulder Set and to hold the camera with

both hands. Two handgrips which are mounted on the little Riser Plate, can be adjusted in all directions.

Remote RUN switch

The camera Right Handgrip as well as the Shoulder Set's Right Handgrip are equipped with a RUN button and a cable that should be plugged into the RS connector located next to the rosette attachment.

Notice

- Do not plug the handgrip cable in an RS connector on the Power Bridgeplate because no RUN functionality is provided there!
- The camera can be switched to *RUN* or *STOP* by any one of several buttons, for example on the Handgrip, on the Camera Control Panel, on the Speed Control Box or on a remote control device. In order to avoid confusion it is recommended to assign only one person to switch the camera *ON* or *OFF*.

Lite – Right Handgrip fig.9/9

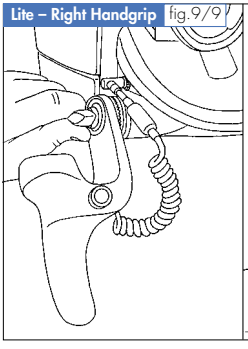

Shoulder Pad

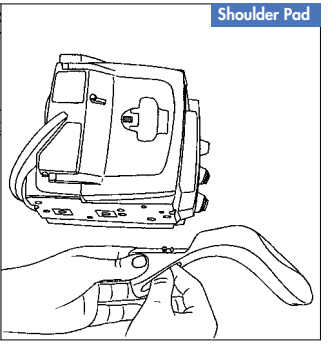

SHOULDER SET

The ARRICAM Shoulder Set – which can be fitted to the bases of the Studio and Lite – allows comfortable handling with two Handgrips while the camera rests on a Shoulder Pad.

The Shoulder Set consists of four parts:

- When fitted on a camera base, the lightweight Riser Plate allows changing from shoulder operation to head operation instantly. This is possible because the Riser Plate holds either the lens Support Rods (incl. Motor(s) and Matte Box) as well as both Handgrips without hindering the quick mounting/releasing on/from most camera heads. Even though the short camera baseplate is called Riser Plate, it doesn't affect the centre of gravity of the camera when it is operated on the shoulder. While using the Riser Plate on a head, the camera centre of gravity will be about 2 cm higher than when the camera is mounted on the Power Bridgeplate. This fact is negligible when thinking of all the advantages offered by a fast operation.

Shoulder Set fig.9/10

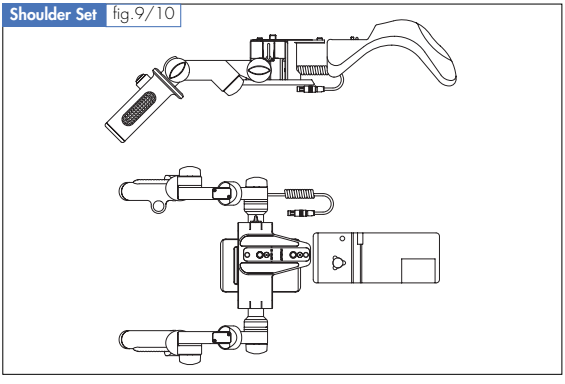

On the top of the Baseplate, two 3/8" bolts provide a firm fixing for the camera. Underneath the Riser Plate is a removable snap plate which fits in the quick-release attachment of the ARRI Gearheads and some fluid heads. This ARRI Quick-Release Plate can be exchanged with an alternative one if another camera head is used. Use a Philips No. 2 screwdriver to exchange the Quick-Release Plate. Two 19 mm Support Rods – the light-weight carbon fibre ones are recommended for hand held operation – can be fixed on the Riser Baseplate. Use a 8 - 10 mm (5/16") flathead long shaft screw-driver to fit the Riser Plate to the camera base – short screwdrivers will not allow the fixing. When mounting the Riser Plate, be sure that the sliding cover plate on the camera bottom side is closed.

- The Shoulder Pad attaches to the camera base with a butterfly bolt. It can be used on both cameras but will not fit on the Lite when the Steadicam Magazine is used.
- The two Handgrips are screwed onto the rosette attachments. Rosette joints enable optimizing individually the ergonomics of the Shoulder Set.

Shoulder Set mounting fig.9/11

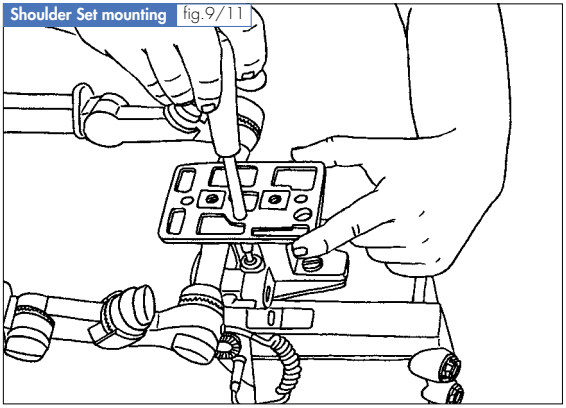

Caution!
Because of the width of some heads, one or the two Handgrips cannot be fixed below a certain angle.

THE LENS SUPPORTS

When using heavy lenses (e.g. Variable Primes, Zooms or Long Focal Lenses, it is essential you use adequate lens supports. ARRI provides several lens Support Bridges as well as different length rods.

THE ACCESSORY HOLDERS

Two brackets – one to be mounted on a ∅19 mm Support Rod and the other on a rosette e.g. on the ARRIHEAD – enable the flexible positioning of all accessories fitted with the ARRI quick release dovetail mechanism, e.g. the Wired Handgrip Attachment WHA-2. Furthermore, two attachments to extend the possibilities of using the well established ARRI Dovetail System are available – the Dovetail Rod Clamp and the Dovetail 3/8" Clamp.

ARRI Dovetail System fig.9/12

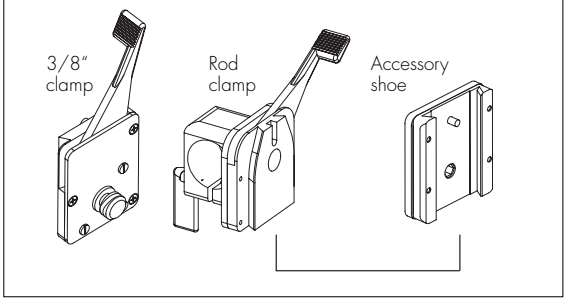

THE UNIVERSAL LOW MODE SET

The Universal Low Mode Set allows the Studio or the Lite to be underslung on a Steadicam or other camera support device. The Universal Low Mode Set is compatible with all ARRICAM Viewfinders, both Video Assists and both 100% Video Tops. The set consists of an Lite Mounting Plate, a Steadicam Plate, two Support Arms and a Support Rod Holder. This Holder slides into a dovetail located on the front of both 100% Video Tops. Use the 3 mm metric hex wrench to fix both Support Arms to the threaded holes on the left and right side of the Studio body.

On the Lite, you have first to attach the Lite Mounting Plate on top of the camera body before fixing the Support Arms to it.
Then the Steadicam Plate will be fixed by four 3 mm screws to the top of the Support Arms.
To allow flexible mounting options, the Steadicam Plate has 21 3/8" x 16 threaded holes, of which 9 are countersunk. This Plate can also be used as an Adapter Plate when an ARRICAM Camera is mounted in high mode on a Steadicam.

Lite Mounting Plate fig.9/13

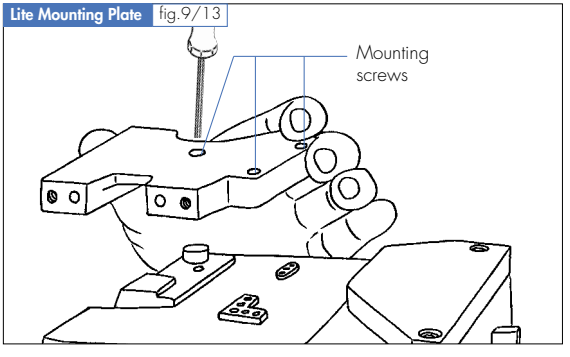

Studio – Universal Low Mode Set fig.9/14

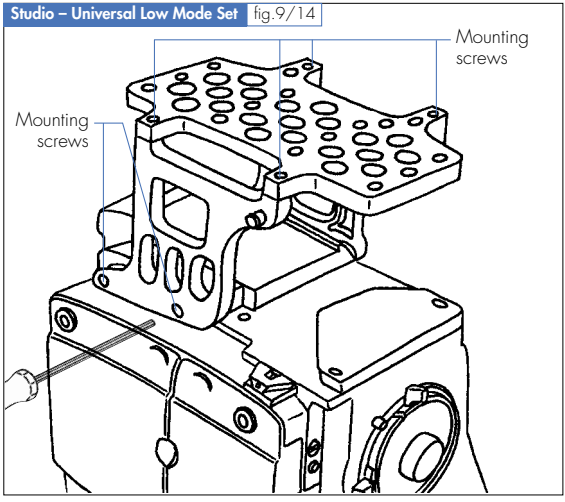

Studio – Universal Low Mode Set fig.9/15

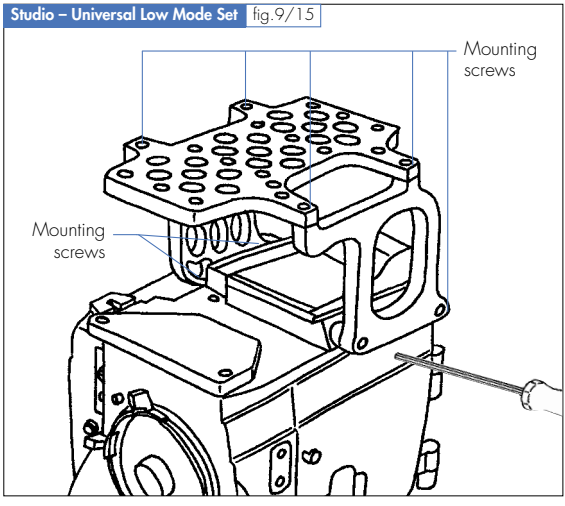

The Support Rod Holder allows the use of lens motors and other rod mounted accessories, without the need for fitting a bridgeplate. It is provided with two 19 mm and two 15 mm removable Rods must be adjusted accordingly to the type of camera used. The Support Rod Holder has to be fixed by one 3 mm hex screw in the correct position: Studio or Lite.

Lite – Support Rod Holder fig.9/16

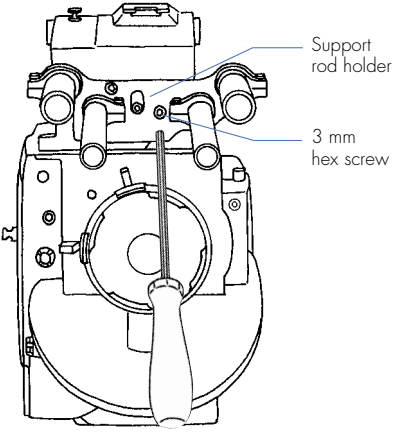

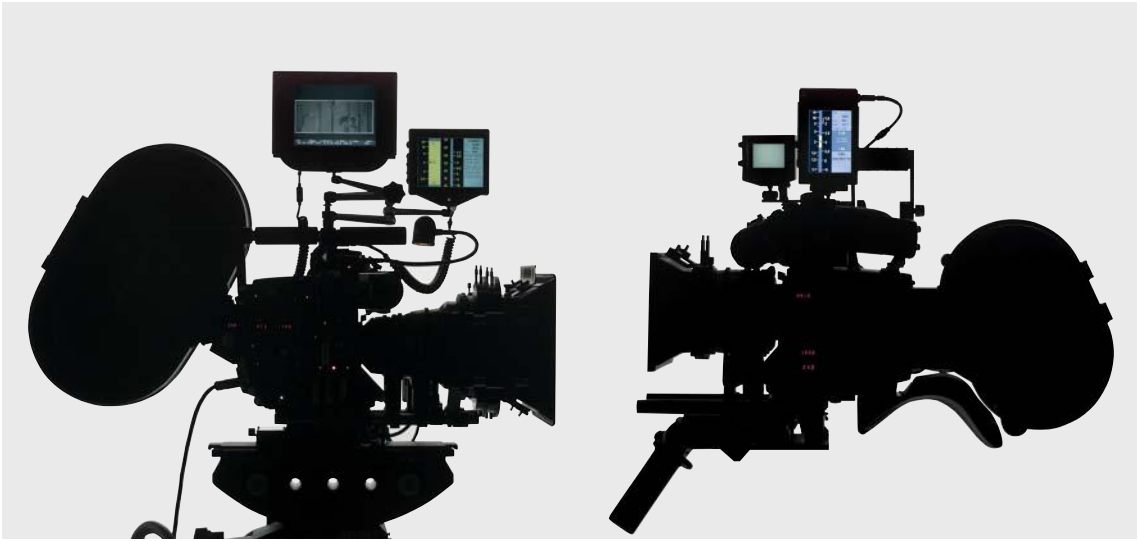

ARRICAM POWER MANAGEMENT

Power Management

ARRICAM, the most sophisticated contemporary camera system, is driven by several electronic components which carry out very precise and defined tasks.
In order to use the system efficiently, the users should have some knowledge about the power supply, the power distribution and consumption as well as about the security components of this modular camera system.

POWER SUPPLY

The ARRICAM System should be powered by a power source providing a nominal 24 V dc. An incorporated electronic device should filter the supplied energy and compensate for deviations. An acceptable voltage range is from 21 V dc and max. 35 V dc.



Caution!
No power sources (Battery or mains Power Supply Unit) providing less than 21 V dc or more than max. 35 V dc should be used at any time!

BATTERIES

At the moment, beside current developments in the field of portable power supply, e.g. Metal Hybrid battery technology, the user can choose between three types of batteries to power the ARRICAM System: the Lead Acid, the Nickel-Cadmium and the Lithium-Ion type.

The Lead Acid battery has disadvantages in being the heaviest battery type in relation to the delivered power, causing environmental problems and being quite inefficient in cold temperature.
Being lighter than the Lead battery, the well established

Nickel Cadmium battery Type ARRI NC24/7R delivers 24 V dc with a 7 Ah capacity.
Depending on the ambient temperature and on the consumption of the equipment, the capacity of NiCad batteries is limited to a certain period of time. When the remaining capacity starts to decrease, the voltage will also slowly decrease. This allows the ARRICAM Electronics to warn the user "L BAT" when the supplied voltage drops below a threshold value, e.g. 20.6 V preset in the factory. One of the disadvantages of the NiCad technology is supposedly the memory effect: Depending on the charge/discharge cycles, the NiCad battery will "remember" its last charge level and will limit its delivery to this stage.

The newer Metal Hybrid battery technology should offer the advantage over the NiCad of less memory effect.

The Lithium-Ion (Li-Ion) camera battery is a rechargeable battery with twice the energy capacity of a Nickel-Cadmium battery for a given size and weight. The battery is composed of Lithium, the lightest metal and the metal that has the highest electrochemical potential. The Li-Ion battery uses Lithium metallic oxide in its positive electrode (anode) and Carbon material in its negative electrode (cathode), and the Lithium Ions inside the battery transfer between the positive electrode and the negative electrode during charge or discharge. Lithium, however, is an unstable metal, so Lithium-Ion batteries are made with Lithium ions from chemical compounds. Because of its lightness and high energy density, Lithium-Ion batteries are ideal for portable devices, such as the ARRICAM System. In addition, Lithium-Ion batteries have no memory effect and do not use poisonous metals, such as Lead, Mercury or Cadmium.

Features

- Voltage of 28.8 V dc/10 Ah lets you cut down on the number of batteries you use.
- High energy density minimizes battery size and weight, making it perfect for use in portable equipment.
- No metallic Lithium is used, so charging and discharging are very safe.
- No memory accumulation, so it provides a full discharge every time.
- The outer casing is an Aluminium alloy, so overall battery weight is lower.

Lithium-Ion batteries have also disadvantages:

1. they are currently more expensive than NiCad and NiMH battery packs.
2. because of their own built in electronics, a Li-Ion battery pack will automatically stop supplying power if the voltage drops below a value preset by the manufacturer. Depending on the ambient temperature, the way it is charged and on the consumption of the equipment, the time of stopping the power supply will differ from pack to pack.

   Consequently, the ARRICAM Electronics must be adjusted to be able to warn the user by displaying "L BAT" in time. To do this, the user or the rental house will have to go to the Option mode – see chapter 1, page 32 to preset a threshold value based on his/her experience with the delivered Li-Ion battery pack. Certainly, this is a kind of compromise to solve the problem that occurs when using "intelligent" batteries.

CONCLUSION

- If the lightness and the higher capacity (more footage can be exposed with one battery pack) is your choice, take LI-Ion batteries on the set.
- If, on the one hand, weight is not a big problem and on the other, you prefer to be warned as usual, it is recommended to use a Metal Hybrid battery or the NiCad pack to operate the ARRICAM System.

POWER SUPPLY UNIT (Mains Adapter)

If power from the mains (115-120 V/60 Hz or 220-240 V/50 Hz) is available and running a cable to the camera is not a problem, you should opt for using the Power Supply Unit. The ARRI Power Supply NG 12/26 R delivers sufficient power with a stabilized voltage of 26 volts.

POWER CONNECTOR

The Fischer power supply connector of the LITE and STUDIO are identical with the one established on the ARRI 435 and 535. (Pin 1 is –, Pin 2 is +).

POWER SUPPLY CABLE

The power supply cable is connected between the power connector on the camera and the power source. Don't use cables longer than you actually need. If you have to use a longer cable, e.g. when the camera is mounted on a remote head, make sure the voltage at the camera end is sufficient. This is more of a problem for a high speed camera like the ARRI 435. Ask your equipment supplier for a long cable that is adequate for the job.

Caution!

The battery end of the cable uses a 3-pin XLR plug wired Pin 1 -ve and Pin 2 +ve. Please be aware that there are other systems in the Film Industry that use this connector but with the polarity reversed. Make sure you do not mix the systems, as the consequences for the equipment are potentially disasterous.

POWER DISTRIBUTION

Several components and all connectors of the cameras are protected by self resetting fuses built into the camera bodies. The total current provided by all the connectors together is limited to 7 A.
Components which need only 12 V dc – e.g. parts of the Video System – are powered by an internal, galvanic separated, power supply. More 12 V outlets can be provided by using the Accessory Power Box (see next chapter). Several connectors marked RS (Pin 1: GND, Pin 2: nominal 24 V dc out) are located on the two camera bodies.
These connectors supply 24 V dc for accessories or can be used to alter the camera status between *RUN* and *STOP*, e.g. for handgrip or for remote control. Last but not least, two 24 V dc outlets (special Lemo connectors, outer: GND, inner: nominal 24 V dc out) are located on both cameras to connect the Work Light as well as the Heated Eyecup. The requested power for remote operating e.g. the Lens Data Display or the Speed Control Box is supplied by the CAC connectors located at the rear of the cameras.

Besides the power outlets on the camera bodies, power connectors are located on further ARRICAM System components. Some of these connectors are exclusively

dedicated to the powering and controlling of some ARRICAM Accessories:

- On the Power Bridgeplate, two connectors marked V-BAT enable the connection of 24 V dc accessories but do not include the RUN/ STOP command (Pin 1: GND, Pin 2: nominal 24 V dc out). The outgoing voltage is equal to the one provided by the Battery or mains Power Supply Unit which supplies the camera.

- On the Lens Data Boxes, three outlets marked FOCUS, ZOOM and IRIS, supply power and control signals for three ARRI CLM-2 motors.



Caution!
No other motor type than the CLM-2 must be connected there.

- To power and control ARRI CLM-1 motors, you have to connect them to one of the two connectors, labelled LCS, located on the Lens Data Box. Further remote control devices of the Lens Control System must, if not used wireless, also be connected to these LCS plugs.

- On each ARRICAM Video Assist, a little outlet marked MINI MONITOR is provided to connect one of the two ARRICAM On Board Monitors (2" and 6.6").

- On the Readout Unit as well as on the LT Frameglow Module, power/signal supplying connectors for the Lens Data Display are provided.

The ARRICAM Bodies protect themselves against an excessive power consumption of components with self-resetting electronic fuses. No other fuses are provided on the ARRICAM System.

In case an attached device is defective (short circuit etc.), the automatic multifuse cuts *OFF* the power supply to the connector. To reactivate the multifuse, remove the component that caused the problem and disconnect the camera from the power source (Battery or mains Power Supply Unit). Wait about 5 sec. before trying again. If the attached device causes trouble again when switched *ON*, do not use this item until it has been checked at a ARRICAM Maintenance Centre!

MONITORING THE POWER SUPPLY

When a battery is attached to the camera and the MAIN switch is *ON*, you should see characters appearing on the Camera Control Panel displays.

When the camera is *STANDBY* and the PHASE button is pressed, the *INCHING* status is activated and the movement will *RUN* at 1 fps as long as the button is held down. While the camera is *INCHING* the actual battery voltage (under load) will be displayed in the FPS display as e.g. V24.6.

If the capacity of the battery and so the voltage falls under a critical level, no Bat warning on the camera is possible. To alert about this status all displays as well as the video On Board Monitor will start blinking. By the way, the same alert occurs if illegal connection of components are made on the camera.

Notice

This figure will tell you the voltage but not the capacity of the battery. Because of the characteristics of a Li-Ion battery, you may assume that if more than 22 V are displayed, the battery capacity would be ok for the next shooting.

Because many parameters will influence the power consumption of the camera system as well as the capacity of the batteries, it is not possible to give here exact information about the footage that can be exposed with one battery – even fully charged. Therefore, each focus puller will have to learn how to manage the power supply based on his/her experience with the available equipment and atmospheric working conditions.

ADVICE

In order to avoid changing the Battery too often, only mount the components needed for the actual shooting on the camera. All ARRICAM System components have been designed to consume as little power as possible.

However, screens like the Lens Data Display or the Video On Board Monitor needs some power, it would do fine to turn them *OFF* when not used.
The Lens Data Display automatically falls into "sleep" mode when it is not used – the LDD after about five minutes, the smaller LDD-FP after about 2 min. As soon as something changes, e.g. the camera status changes to *RUN*, the lens setting is changed or a warning message should be displayed, it will "wake up" automatically.

Also shooting in cold atmospheric condition will require more power because the internal heaters of the camera will turn on automatically. Furthermore the Heated Eyecup will often be turned *ON*. So please be aware to have enough spare batteries with you if no Power Supply Unit can be used.
In any case, we recommend to use a Heated Barney (with spare chemical warmers) in cold conditions.







MISCELLANEOUS

Standard 35/Super 35 Conversion

Even though we strongly recommend you mention the desired format (35/S35) when placing your order with a rental house or ask an ARRICAM Maintenance Centre to perform the conversion, we describe here briefly the operation, should it be neccessary to do it yourself.

For shooting in Super 35, the lens port, the Viewfinder Mounting Plate, the Aperture ApperturE Format Mask, the Frameglow Module Mask, the Ground Glass and the integrated Compensation Bar of the Power Bridgeplate or Baseplate must be altered for the format. This ensures that the lenses and accessories are exactly aligned for the optical centre of Super 35.

CONVERTING THE LENS PORT TO SUPER 35

See chapter 1 – page 18, fig. 1/1 and 1/2.

For shooting in Super 35, the lens port must be turned 180°.

- Remove the six cylindrical screws.
- Unscrew both locking grips.
- Turn the lens port so that the number "2" is positioned next to the marking.
- Unscrew the index pin and screw it into the opposite inner thread.
- Screw both locking grips firmly into the correct operating position.
- Replace the six cylindrical screws and screw tightly.
- Check the flange focal distance.

EXCHANGING THE VIEWFINDER MOUNTING PLATE

All ARRICAM Viewfinders and 100% Video Tops can be used for shooting in both formats – Standard 35 and Super 35.
To align the Viewfinder to the Super 35 centre, the apropriate Mounting Plate must be installed. To do so, use a 2 mm metric hex wrench to unscrew the plate showing the STANDARD engraving and replace it by the one showing SUPER 35. When fixing the plate, be sure that it fits flush with the camera body – see chapter 1, page 57, fig. 1/19.

EXCHANGING THE APERTURE FORMAT MASK, THE GROUND GLASS AND THE FRAMEGLOW MASK

For instructions on inserting Aperture ApperturE Format Masks into the Film Gate for Super 35, see chapter 1, page 64, camera interiors.
Regarding the Ground Glass and the illuminated Format Markings for this format, see chapter 4, page 152 and 158.

CONVERTING THE POWER BRIDGEPLATE TO SUPER 35

See chapter 9 – Camera Supports

3 Perforation/4 Perforation Conversion

Both Studio and Lite are available in 3 or 4 perforation, however it is not a conversion that can be performed in the field. The changing of the movement can only be performed in an ARRICAM Maintenance Centre.

The Work Light

After loosening the mounting screw, slide the Work Light foot into one of the several Accessory Shoes and tighten the screw. Switch *OFF* the camera on the MAIN switch, then connect the short coiled cable (similar to the Heated Eyecup) to one of the two dedicated connectors located on the left side of the STUDIO and on the front of the LITE. The Work Light is switched *ON* by turning its cap.

It is prudent to have spare bulbs – 24 V/4 W – with you.

Heated Eyecup and Work Light may be used together (but keep an eye on your battery!).

Studio – Work Light mounting fig. 11/1

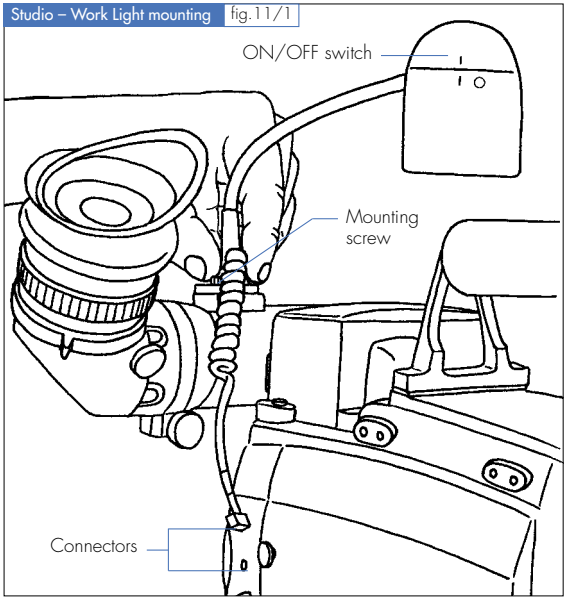

Checking the Mirror Shutter manually

It is necessary to rotate the mirror shutter out of the way before either checking/cleaning the Film Gate from the camera front or checking/cleaning/changing the Ground Glass/the Fieldlens. When the camera is powered, briefly push the DUST CHECK button and the mirror will be rotated out of the way while the shutter opens to 180° if previously set to a smaller angle. Because viewing through the Viewfinder is now not possible, DC appears on the FPS display(s). By pushing the DUST CHECK button again, the shutter will return to the preset opening and the mirror will go to the viewing position.

Sometimes, it is also reassuring to check that the mechanical reality corresponds with the electronically displayed shutter opening. Therefore, several important angles are also labelled on the shutter blade itself. It is obvious that 180° is not labelled.

Notice

Like all other operations done when the lens cavity is open, also this one should be carried out in a sheltered place where there is no risk of dust getting into the camera.

1. Connect the camera to a power supply and set the camera MAIN switch to *ON*.
2. Take lens or lens cavity cover off the port.
3. If an In-camera Slate Box is connected, set its switch to *OFF*.
4. Check the preset shutter angle value shown on the SHUTTER display(s).

5. Briefly press the PHASE button on the Camera Control Panel. Now the mirror is turned out of the way but the shutter opening has not changed.
6. Switch the camera MAIN switch *OFF* .
7. By means of a clean toothpick, carefully rotate the mirror shutter manually clockwise until the short white index line at the bottom side of the shutter appears.
8. Because the labelling is painted with a quite dark magenta colour on the black shutter blade, use a torch to see if the painted shutter angle lined up with the index line corresponds with the electronically preset shutter opening.
9. Switch the camera MAIN switch *ON* and push the PHASE button for 2 sec. in order to turn the mirror into viewing position again.

Caution!
Never touch the mirror with any object or with fingers!

If you doubt that the opening angle corresponds with the displayed figure, consult an ARRICAM Maintenance Centre.

Camera Lens Port/Mirror Shutter fig.11/2

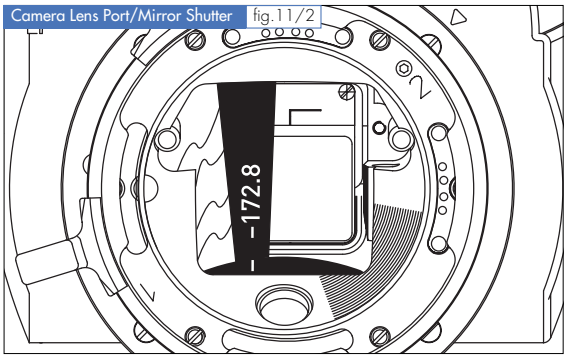

Wired Handgrip Attachment

The Wired Handgrip Attachment (WHA-2 & WHA-3) is provided to allow the Wireless Lens Control components to be connected directly to the camera by means of cables, making it ideal for situations where the use of a Wireless Lens Control system is either uneccessary or impractical. It is paticulary useful because it will interface with the Remote Control Station as well as directly with the camera and, as well as the Wireless Lens Control units, accepts the Wireless Remote Control unit.

MOUNTING AND CONNECTING THE WHA-2

- The remote control units clip onto the WHA-2.

- The WHA-2 itself can be mounted with an ARRI Dovetail Shoe to several ARRI Dovetail Support Parts like the 3/8" Clamp, the Rod Clamp and the Rosette Clamp.

The WHA-2 can be connected with the following ARRI Cables:

- LC-M1-SP-S or LC-Z1-S either to a Lens Data Box (LCS connector), to a CLM-1 motor which is connected to the Lens Data Box or to the Remote Control Station (WHA-2 connector),

- KC 70-S either to the Camera Accessory Connector (CAC) on the camera or to the CAC Distribution Box,

Up to two may be connected simultaneously to either the Studio or Lite, one into an LCS port of the Lens Data Box and one into the camera's CAC connector.

It may also be used as one of the components that connects with the Remote Control Station.

Notice

•The LCS connector of the Lens Data Diplay will not work with the Wired Handgrip Attachment.

•The WHA-3 differs from the WHA-2 only in that it has an extra button to activate the Focus Tracking feature of the LDD-FP.

•When using two Wireless Focus/Iris Units (WFU-1) together, it is best to have the two knob/slider selection switches in opposite positions otherwise working out working out who's knob/slider has control of which lens axis becomes a complex business.

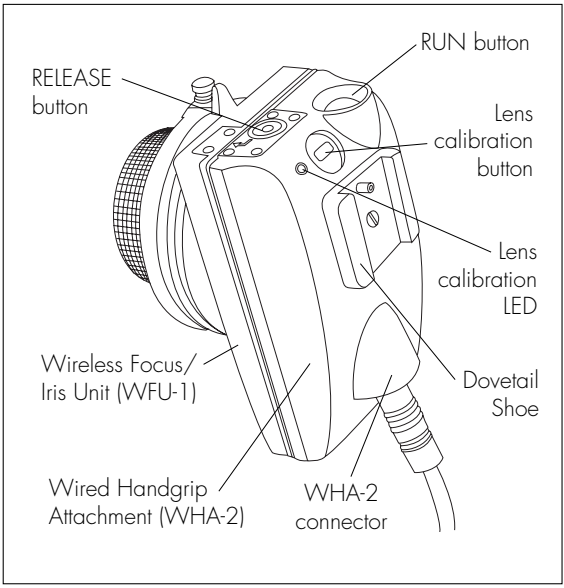

Accessory Power Box

The Accessory Power Box provides three extra 24 V and two 12 Vpower outlets for accessories plus a RUN button.

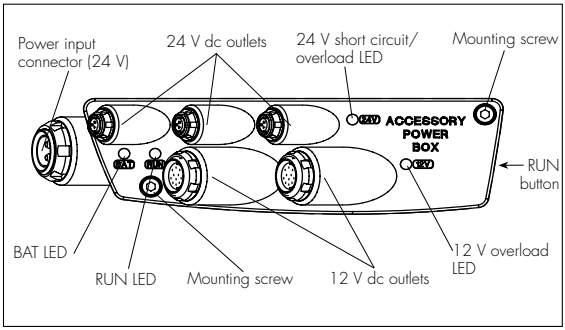

MOUNTING AND POWERING THE ACCESSORY POWER BOX (APB)

There are a number of options available when mounting and powerthe Accessory Power Box:

1. MOUNTED ON AND POWERED BY THE CAMERA.

The Accessory Power Box attaches directly onto the Studio instead of the In-camera Slate Box and so cannot be used with it simultaneously. The APB attaches to the Lite only via the Lens Data Box and agian, cannot be used in conjunction with the In-camera Slate Box.
In this configuration, the Accessory Power Box draws its power from the camera electronics and, although this is the neatest arrangement, the amount of power the APB can deliver in this mode is limited.
•Total power output is 70 watts. e.g. The 24 V outlets can deliver 3 amps between them in total. If the 12 V

outlets are used, they can deliver 3 amps, leaving only 1.5 amps for the 24 V outlets. (Power = Volts x Amps)

•The APB's BAT light glows red when the camera shows its low battery warning.

•The APB's RUN button and RUN light function.

2. MOUNTED ON THE CAMERA, POWERED EXTERNALLY.

With this method the Accessory Power Box mounts in the same way as the first example and so has communication with the camera. The difference is that power is fed into the APB's power connector either from a seperate battery of from the camera battery via a Y-cable (KC-62-S). This enables the APB to output considerably more power.

•Total power output is 250 watts approx. e.g. Each 24 V outlet can supply 3 A continuously, 5 A peak. (24 V is unregulated, so is actually supply voltage). Each 12 V outlet can supply 1.5 A continuously.

•The BAT light glows red when the battery connected to the APB falls below the Low Battery threashold set in the camera.

•The APB's RUN button and RUN light function.

3. MOUNTED ANYWHERE, POWERED EXTERNALLY

The Accessory Power Box Cover is equipped with a 3/8 threaded hole which allows it to be mounted with the ARRI Dovetail system. Therefore it can be placed almost anywhere on or around the camer (which does not even have to be an ARRICAM).

•Total power output is 250 watts approx. (see above).

•The BAT light glows red when the power source falls below 20.5 volts.

•The RUN button and RUN light do not function.

Tools

In addition to the usual tools and cleaning materials, the camera assistant only needs a few specific tools to work with the ARRICAM System. Except the ARRICAM Combi Tools and the ARRI A 16SR 3 twin-pronged driver, all tools can be purchased in regular hardware shops. Most rental houses or an ARRI Dealer will be able to provide you with the ARRICAM Users' Tool Kit, the Combi Tools and the twin-pronged driver which can also be ordered separately.

1. A 8-10 mm (5/16") flathead long shaft screwdriver e.g. Facom Agt. 10 x 100 is used to attach the Baseplate, the Magazine Stabilization Bracket and the Shoulder Set.

Notice

Please note that screwdrivers with a short, stubby shaft cannot be used to mount the Shoulder Set base.

2. A 2 mm (1/12") flathead screwdriver is used to open the Mask Frameglow in order to access to the Mask.
3. With a 5 mm x 150 mm metric hex wrench you will be able to attach or remove the Handles and the Accessory Shoes to/from the Carrying Handles.
4. With a 3 mm metric hex wrench you will be able to attach or remove most of the Accessories and Boxes to or from the camera.
5. With a 2 mm metric hex wrench you will be able to adjust the friction of the Studio door hinge. Furthermore, the tension of all swivelling Viewfinder Arms, except the one of the hinge type Studio Viewfinder, can be adjusted with this tool.
6. With a 1.5 mm metric hex wrench you will be

able to adjust the Video Assist chip and the Mask Frameglow alignment, however it is best to leave this very accurate work to the experts of ARRICAM Maintenance Centre.

7. The ARRI A 16SR-3 twin-pronged driver – part No. K5.26129.0 – will be used for adjusting the swing-over tension of all swivelling Viewfinder Arms except the hinge type Studio Viewfinder.
8. Two types of ARRICAM Combi Tool are provided:
   A) The first one – part No. K4.52685.0 – is a dual headed Ground Glass/Fieldlens tool with a 2.5 mm thread on one end a 3 mm thread on the other. The Ground Glass and Frameglow Mask (3 mm threaded hole) and the Fieldlens (originally a 2,5 mm but now a 3 mm threaded hole) can be pulled out of the camera cavities for exchange or cleaning purposes.
   B) The second one – part No. K4.52722.0 – has a 3 mm thread on one end and a 1,5 mm metric hex wrench on the other.

User's Tool Kit fig.11/3

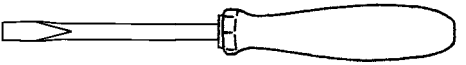

8-10 mm (5/16") flathead long shaft screwdriver

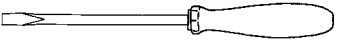

2 mm (1/12") flathead screwdriver

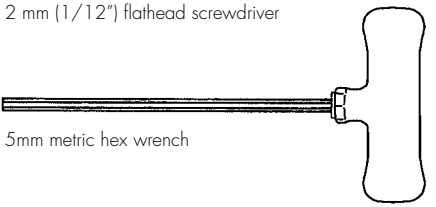

5mm metric hex wrench



3mm metric hex wrench)



2mm metric hex wrench



1.5mm metric hex wrench

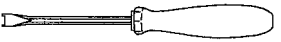

ARRI A 16SR 3 twin-pronged driver

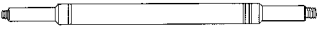

ARRICAM – 2.5 mm/3 mm Combi Tool

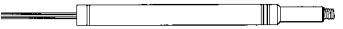

ARRICAM – 1.5mm metric hex wrench/3 mm Combi Tool





APPENDIX

ARRICAM SYSTEM – TECHNICAL DATA

ARRICAM System Users' Guide 11/2003

TECHNICAL DATA	ARRICAM STUDIO	ARRICAM LITE
Film format	35 mm DIN 15501	35 mm DIN 15501
Lens port convertible 35/S35 format	54 mm PL	54 mm PL
Flange focal distance	51.98 mm-0.01	51.98 mm-0.01
Lens contacts for LDS Lenses	yes	yes
Forward run	1-60 fps	1-40 fps
Reverse run with Studio Magazines and SCB	1-32 fps	1-32 fps
Noise level	below 20 dB/A	below 24 dB/A
Temperature range	-10° to +40°C / 14° to 104° F	-10° to +40°C / 14° to 104° F
Reflex mirror shutter, electronically adjustable while running	11.2° to 180°	11.2° to 180°
Power supply	24V dc - 32V dc	24V dc - 32V dc
Camera body with Viewfinder	8.15 kg/17.95 lbs.	5.25 kg/11.56 lbs.
Studio Magazine 300/1000	5.2 kg/11.46 lbs.	5.2 kg/11.46 lbs.
Studio Magazine 120/400	3.3 kg/7.26 lbs.	3.3 kg/7.26 lbs.
Lite Shoulder Magazine	2.7 kg/5.95 lbs.	2.7 kg/5.95 lbs.
Lite Steadicam Magazine	2.7 kg/5.95 lbs.	2.7 kg/5.95 lbs.

ARRICAM ACRONYMS AND ABBREVIATIONS

AGC	Automatic Gain Control (Video Assist)
ATC	Automatic Time-code
CAC	Camera Accessory Connector
CCB	Camera Control Box
CLM-1	Controlled Lens Motor (connected to LCS plug on LDB)
CLM-2	Controlled Lens Motor (connected to focus, zoom or iris plug on LDB)
ICU	Iris Control Unit
ISB	In-camera Slate Box
IVS	Integrated Video System (Video Assist)
KC	Camera Cable Nr.
LCS	Lens Contol System
LDB	Lens Data Box
LDD	Lens Data Display
LDD-FP	Lens Data Display – Focus Puller
LDS	Lens Data System
LT	ARRICAM Lite/Lite Accessory
LT-VF	Lite Viewfinder
MCB	Manual Control Box
MGC	Manual Gain Control (Video Assist)
OCR	Optical Character Recognition Software (ARRI)
OSD	On Screen Display (Video Assist, Video Monitor,ect.)
RCS	Remote Control Station (Plate + MCB Holder)
RS	RUN/STOP (button, connector)
SAC	Speed Control Box Accessory Connector
SCB	Speed Control Box
ST	ARRICAM Studio/Studio Accessory
ST-VF	Studio Viewfinder
TC	Time-code
TLA-2	Top Load Adapter 2 (now Dual Port Adapter)
TSB	Timing Shift Box
UB	Userbits (TC, slate information)
ULT-VF	Lite Universal Viewfinder
UST-VF	Studio Universal Viewfinder
VITC	Vertical Interval Time-code
WFU	Wireless Focus/Iris Unit
WHA-2	Wired Handgrip Attachment
WMU	Wireless Main Unit (transmitter)
WRC	Wireless Remote Control
WZU	Wireless Zoom Unit

ARRI GROUP ADDRESSES

ARRICAM System Users' Guide 11/2003

Canada	**ARRI Canada Limited** 415 Horner Ave. Unit 11, Toronto, Ontario M8W 4W3, Canada Voice phone: +416 255 3335, FAX: +416 255 3399 Email: email@arrican.com
Germany	**Arnold & Richter Cine Technik** Türkenstraße 89, D-80799 Munich, Germany Voice phone: +49 (0)89 3809-0, FAX: +49 (0)89 3809-1244 Email: webmaster@arri.de
	ARRI Camera Rental (Film Equipment Rental Germany) Türkenstraße 89, D-80799 Munich, Germany Voice phone: +49 (0)89 3809-1240, FAX: +49 (0)89 3809-1798 Email: mjahn@arri.de
Great Britain	**ARRI GB Limited – Sales & Service** 2 Highbridge, Oxford Road, Uxbridge, Middlesex, UB8 1LX, England Voice phone: +44 (0)1895 457 000, FAX: +44 (0)1895 457 001 Email: sales@arri-gb.com
	ARRI MEDIA (Camera Rental, UK) 3 Highbridge, Oxford Road, Uxbridge, Middlesex, UB8 1LX, England Voice phone: +44 (0)1895 457 100, FAX: +44 (0)1895 457 101 Email: info@arrimedia.com
	ARRI Lighting Rental (Lighting Rental, UK) 4 Highbridge, Oxford Road, Uxbridge, Middlesex, UB8 1LX, England Voice phone: +44 (0)1895 457 200, FAX: +44 (0)1895 457 201 Email: tross@arrilightingrental.com
Italy	**ARRI Italia S.r.l., Head Office (Milan)** Viale Edison 318, 20099 Sesto San Giovanni (Milan), Italy Voice phone: +39 (0)2 262 271 75, FAX: +39 (0)2 242 1692 Email: info@arri.it
	ARRI Italia S.r.l., Rome Via Placanica 95, 00040 Morena (Rome), Italy Voice phone: +39 (0)6 726 707 97, FAX: +39 (0)6 723 1541
USA	**ARRI USA Inc. – East Coast** 617 Route 303, Blauvelt, NY 10913-1123, USA Voice phone: +1 914 353 1400, FAX: +1 914 425 1250 Email: arriflex@arri.com
	ARRI USA Inc. – West Coast (Burbank Office) 600 North Victory Blvd., Burbank, CA 91502-1639, USA Voice phone: +1 818 841 7070, FAX: +1 818 848 4028 Email: brussell@arri.com
	CSC Camera Service Center – Film Equipment Rental – NY, USA 619 West 54th St, New York, NY 10019, USA Voice phone: +1 212 757 0906, FAX: +1 212 713 0075 Email: ctamarro@cameraservice.com
	CSC Camera Service Center – Film Equipment Rental – Florida, USA 2385 Stirling Road, Fort Lauderdale, FL 33312, USA Voice phone: +1 954 322 4545, FAX: +1 954 322 4188 Email: estamm@cameraservice.com
World Wide Web	www.arri.com

STATUS MESSAGES, WARNINGS AND TROUBLE SHOOTING LIST

ARRICAM System Users' Guide 11/2003

WARNING AND STATUS MESSAGES	LDD/LDD-FP ALERT	LDD/LDD-FP STATUS	VIDEO MONITOR	EXPLANATIONS/SUGGESTED REMEDY
Adapter Cover missing			•	Always use the Dual Port Adapter cover (Not the plastic type!) while this warning is shown, the camera can run.
Adapter Cover		•		
Adapter Door open (Adapter in preparation)			•	When mounting Lite magazine on the Studio, you can open the Magazine Adapter's door for threading purposes. ATTENTION: If this door stays open, the warning will remain on the displays, but without preventing the camera to run.
Adapter Door		•		
Async		•	•	First of all, try to run the camera with a correct power supply. If the warning ASYNC persists while using a correct power supply and synchronizing the camera with a sync signal, check this signal and all the dedicated cable connections. If the warning still persists, consult an ARRICAM Maintenance Centre.
Buckle Trip		•	•	Check the film threading. Close the film guides and place – in the Studio only – the buckle trip in its vertical rest position.
Communication Error	•			Consult an ARRICAM Maintenance Centre.
Dust Check		•	•	When pushing briefly the dc button, the mirror will be turned out of the viewing position and the shutter will – if it is not — open to 180°. While the mirror is out of the way, dc will be displayed. After having pushed the dc button again – dc will fade out.
Film Jam		•	•	Check the film threading. If there was no jam in the camera, check the magazine.
Film End < 20' or < 6 m		•	•	Caution, be ready to reload the camera.
Filter in the Gate		•	•	Indicates that a gel filter has been inserted in the gate.
Firmware incompatibility	•		•	Exchange the component or ask an ARRICAM Maintenance Centre for firmware updating.
Heater		•	•	Avoid turning on the camera if Heater is displayed – the movement could be too cold to work properly. Try to warm up the camera carefully, lens and magazine by using e.g. a Heated Barney or a hairdryer. Do not place a hot luminaire too close to the camera.
Illegal Fps		•	•	Select frames per second rate that fits with the possible range.
Inching		•	•	While pushing the phase button on the Camera Control Panel, the movement will be inched.
ISB not ok (ISB Status)	•			Exchange the In-camera Slate Box or consult an ARRICAM
ISB nok (In the ISB line)			•	Maintenance Centre.
In-camera Slate Exposure		•	•	Information about the exposing of the In-camera Slate while the camera is running up or down. During these periods, the shutter automatically closes to 0°.
xxx entries in Take-list (ISB Status)	•		•	Information about the number of takes recorded by the ISB.
(ISB Status): no exp module			•	Ask your ARRICAM Maintenance Centre to install the Exposure Module.
No exposure module detected	•			
3.0 V (example in the ISB line)			•	While pushing the test button on the In-camera Slate Box, this message shows the voltage of the ISB On Board Battery. If it is below ~ 2.0 V, exchange the ISB Battery or consult an ARRICAM Maintenance Centre.
ISB BAT 3.0 V (example)		•		

WARNING AND STATUS MESSAGES	LDD/LDD-FP ALERT	LDD/LDD-FP STATUS	VIDEO MONITOR	EXPLANATIONS / SUGGESTED REMEDY
Cannot set more than 9 Marks (only with LDS Lens)	•			Delete a Focus Mark to replace it by the new one.
Push UP or DOWN to select, then DELETE (only with LDS Lens)	•			Follow the instruction to handle the Focus Marks on the Lens Data Display scale.
Push SET to select, then UP/DOWN top renumber (only with LDS Lens)	•			
Push UP or DOWN to select, then hold SET to remember (only with LDS Lens)	•			
Lens Error – Use different lens	•			Check the system with a different lens.
Low Battery		•	•	As soon as this message appears, replace the battery with a full charged one. If the message arrives during a take, you most probably will be able to complete it before stopping the camera.
Mag takes up film		•	•	Be patient, the magazine is winding loose film on the cores. If the winding is not possible because film has not been properly attached to the take up core, the camera will change to not ready – so reload the magazine. If no magazine is mounted, e.g. for test purposes, the warning will disappear after about 25 sec. – only then you will be able to run the camera.
Take up runs free			•	Reload the magazine. The film was most likely not properly attached to the take up core.
Mag Take up side runs free. Reload Mag!	•			
Magazine Error			•	Check the system with another magazine.
Magazine Error. Use another magazine	•			
Movement open			•	Close the movement.
Movement		•		
Movement/Shutter async	•		•	Consult an ARRICAM Maintenance Centre.
Movement excess temperature			•	Movement motor overheated due to motor overload.
Movement or shutter speed too high			•	The camera exceeds its speed limit. Clear with PHASE button.
No SCB SYNC input	•		•	No valid sync signal present. Check the synchronization signal source and all cable connections. When "R" appears in front of the fps, the REVERSE mode has been selected.
No Time-code (ISB) SYNC Input	•		•	Exchange the ISB or consult an ARRICAM Maintenance Centre. Note: no reverse run is possible in the TcSy mode.
Phase is fixed		•	•	To alter the phase by means of the phase button, set the switch on the Speed Control Box to manual.
Check Ramp Values			•	Select fps, shutter and/or iris opening and ramping time that fits with the possible range.
Ramp		•		
Reverse not possible			•	Use an Studio Magazine to shoot in reverse mode.
No Reverse		•		
Roll Out		•	•	There is no more raw stock in the magazine – reload.
Shutter Error			•	Consult an ARRICAM Maintenance Centre.
Preset Shutter is not actual Shutter	•			Consult an ARRICAM Maintenance Centre.
Software incompatibility	•		•	Exchange the component or udate the software.
Software Update in progress	•		•	Wait until update is completed
Timeout for camera run			•	Camera cuts after 350m to prevent running endlessly.
TSB		•	•	The timing shift function is activated.

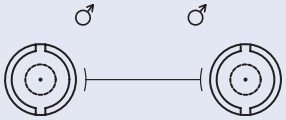

Video out — Video in

Video Signal Source
ST/LT Video Assist

Speed Control Box SCB
Video Device

BNC

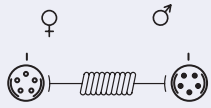

LDD-FP — LDD

Lens Data Display-
Focus Puller
LDD-FP

Readout Unit
LT Frameglow Module
Remote Control Station RCS

K LDD-FP-RDO
(coiled) K 2.54172.0

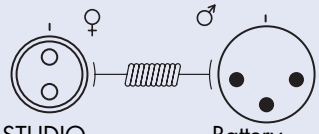

Power dc in — Power dc out

STUDIO
LITE

Battery
Power Supply Unit

KC 20-S
(1.5 m/5 ft) K 2.41966.0
KC 29-SP-S
(coiled) K 2.44693.0

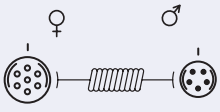

LDD — LDD

Lens Data Display
LDD

Readout Unit
LT Frameglow Module
Remote Control Station RCS

KC 60-SP-S
(coiled) K 4.55855.0
KC 79-S
(3 m/10 ft) K 2.54156.0

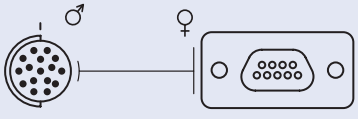

CAC — COM x

STUDIO
LITE

Personal Computer
9p. serial interface

KC 61-S
(2 m/6 ft) K 4.54630.0

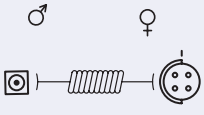

HE-3

STUDIO
LITE

Heated Eyecup

KC 63-SP-S
(coiled) K 4.54460.0

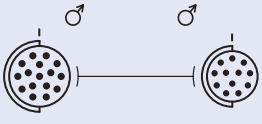

CAC — SAC

STUDIO
LITE

Speed Control Box SCB
Manual Control Box Cable Adapter
Remote Control Station RCS

KC 65-S
(3 m/10 ft) K 2.54128.0
KC 69-S
(15 m/50 ft) K 2.54131.0

Sync Out — Sync In

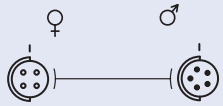

Pick-up Unit
Sync Generator

Speed Control Box SCB
on slaved camera

KC 66-S
(10 m/33 ft) K 2.54129.0

CAC — LDD

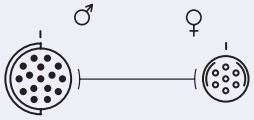

STUDIO
LITE

Lens Data Display LDD

KC 67-S
(3 m/10 ft) K 2.54132.0
KC 68-S
(15 m/50 ft) K 2.54133.0

CAC — WHA-2
WRC-1

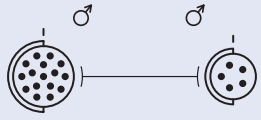

STUDIO
LITE

Wireless Handheld Adapter WHA-2
Wireless Remote Control WRC-1

KC 70-S
(3 m/10 ft) K 2.54135.0

CAC

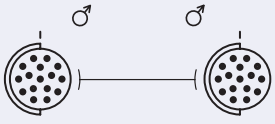

STUDIO
LITE

Iris Control Unit ICU

KC 72-S
(1 m/3 ft) K 2.54137.0

CAC

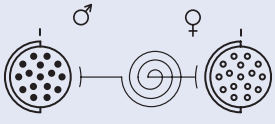

STUDIO
LITE

Cable Drum

KC 73-S
(50 m/165 ft) K 2.54134.0

CAC — CAC

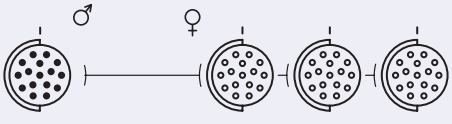

STUDIO
LITE

CAC Distribution Box

KC 74-S
(1 m/3 ft) K 2.54130.0

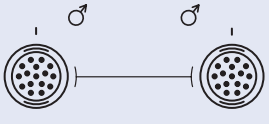

ST-LDB Adapter Plate

ST-LDB Body Plate

KC 75-S
(1 m /3 ft) K 2.54150.0

LCS Lens Data Display LDD	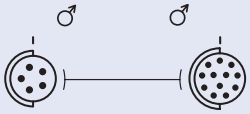	SAC Speed Control Box SCB	KC 76-S (3 m/10 ft) K 2.54153.0
Adapter Cable for KC 67-S/KC 68-S	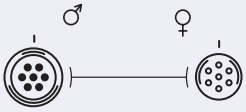	LDD Lens Data Display LDD	KC 77-S (0.2 m/8 in) K 2.54154.0
CAC STUDIO LITE	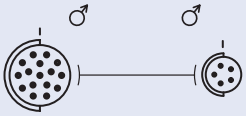	Sync In Speed Control Box SCB on slaved camera	KC 78-S (15 m 50 ft) K 2.54155.0
CAC STUDIO LITE	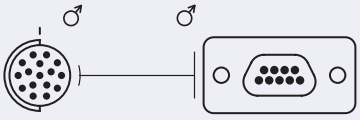	Handheld PC (iPAQ) docking station	KC-H-1 (0.5 m/1.5 ft) K 4.52687.0
LCS WHA-2* ST Lens Data Box ST-LDB LT Lens Data Box LT-LDB Remote Control Station*	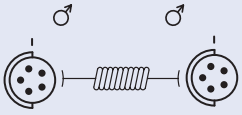	WHA-2 Wireless Handheld Adapter WHA-2 + Wireless Zomm Unit WZU-1 Wireless Focus/Iris Unit WFU-1	LC-M1-SP-S (coiled) K 4.41397.0
LCS WHA-2* ST Lens Data Box ST-LDB LT Lens Data Box LT-LDB Remote Control Station*	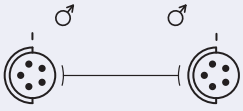	WHA-2 Wireless Handheld Adapter WHA-2 + Wireless Zomm Unit WZU-1 Wireless Focus/Iris Unit WFU-1	LC-Z1-S (3 m/10 ft) K 4.41395.0
LDD-FP Lens Data Display- Focus Puller LDD-FP	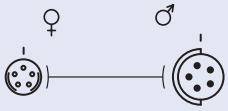	LCS ST Lens Data Box ST-LDB LT Lens Data Box LT-LDB	LDDFP-LCS 600 (0.6 m/2 ft) K 4.52969.0 LDDFP-LCS 1000 (1 m/3 ft) K 2.54173.0

Acknowledgment

Like the ARRICAM System itself, this Users' Guide consists of several interchangeable parts that will continuously be up-dated. In order to serve you best, I would greatly appreciate your requests, inquiries, comments and suggestions mailed to office@imago.org.

I would like to express my gratitude to all friends and colleagues without their help this Users' Guide would never became what it is. Among to many others, special thanks to Marc Shipman Müller in Berlin, Allan Fyfe in London, Klaus Jacumet, Marita Müller, Herman Popp, Jochen Thieser, Andreas Weeber in Munich, Alain Gautier in Paris, John Fauer ASC in Southampton/NY as well as Fritz Gabriel Bauer, Kurt Bednarsky, Hannes Buchegger, Josef Handler, Michael Haubmann, Franz Huber, Klemens Kehrer, Thomas Kittenberger, Hans Nussbaumer, Wolfgang Ramsauer, Thomas Smidek, Walter Trauninger and Hans Peter Trmal in Vienna. Furthermore my thankfulness goes to my Camera-Assistants Harald Staudach, Martin Bobal, Gottfried Schmelzer and last but not least to Don Harris in London and Gerhard Leitner for the proof reading as well as to Andreas Pauleschitz for designing and illustrating your ARRICAM System Users' Guide.



Frédéric-Gérard Kaczek AAC
IMAGO Secretary General

Vienna – in December 2002

Version 03E update by John Duclos - November 2003

Copies of this ARRICAM Users' Guide can be ordered at any ARRICAM Maintenance Centre or at the ARRI Headquarters in Munich.
Part No. K 5.58508.0

It is possible to download this information from the internet: www.arri.com.