ARRI

ARRIFLEX®

765

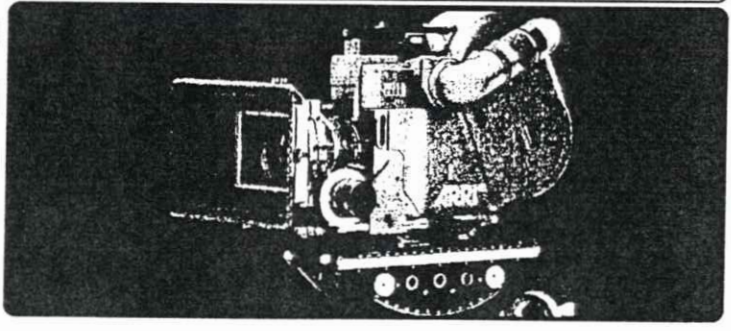

User´s-Manual

CONTENTS

INNER CAMERA

Movement overview ____ 4
Movement skeleton mounting ____ 4
Film guides and aperture plate ____ 5
Sprocket wheels and sprocket guides ____ 5
Buckle trips ____ 6
Film end ____ 6
Threading the film ____ 6
Adjustable pitch control ____ 7
Magazine release ____ 8
Threading accessory light ____ 8
Adjustable reflex mirror shutter ____ 8
Ground glass ____ 9

OPERATING FEATURES

Frame rate selector ____ 10
Camera run ____ 10
Electronic display functions ____ 10
- Ready mode ____ 10
- Standby mode ____ 12
- Error mode ____ 13
- Abbreviated error diagnosis guide ____ 14

Calling up display functions ____ 14
Resetting the exposed film counter ____ 15
Running without magazine ____ 15
Warning display ____ 15
Phase shifter/Run test switch ____ 16

Nightlight switch _____ 17

THE SYSTEM

Lenses _____ 18

Lens table _____ 18

Arriglow viewfinder and video assist _____ 19

6.6"x6.6" Swing-away matte box _____ 20

Displacement magazines _____ 21

Magazine unexposed film counters _____ 21

Quick-release base and universal follow focus _____ 22

Camera power supplies _____ 22

Technical Data _____ 24

Fig. 1
Left Cameraside

Fig. 1
Left Cameraside

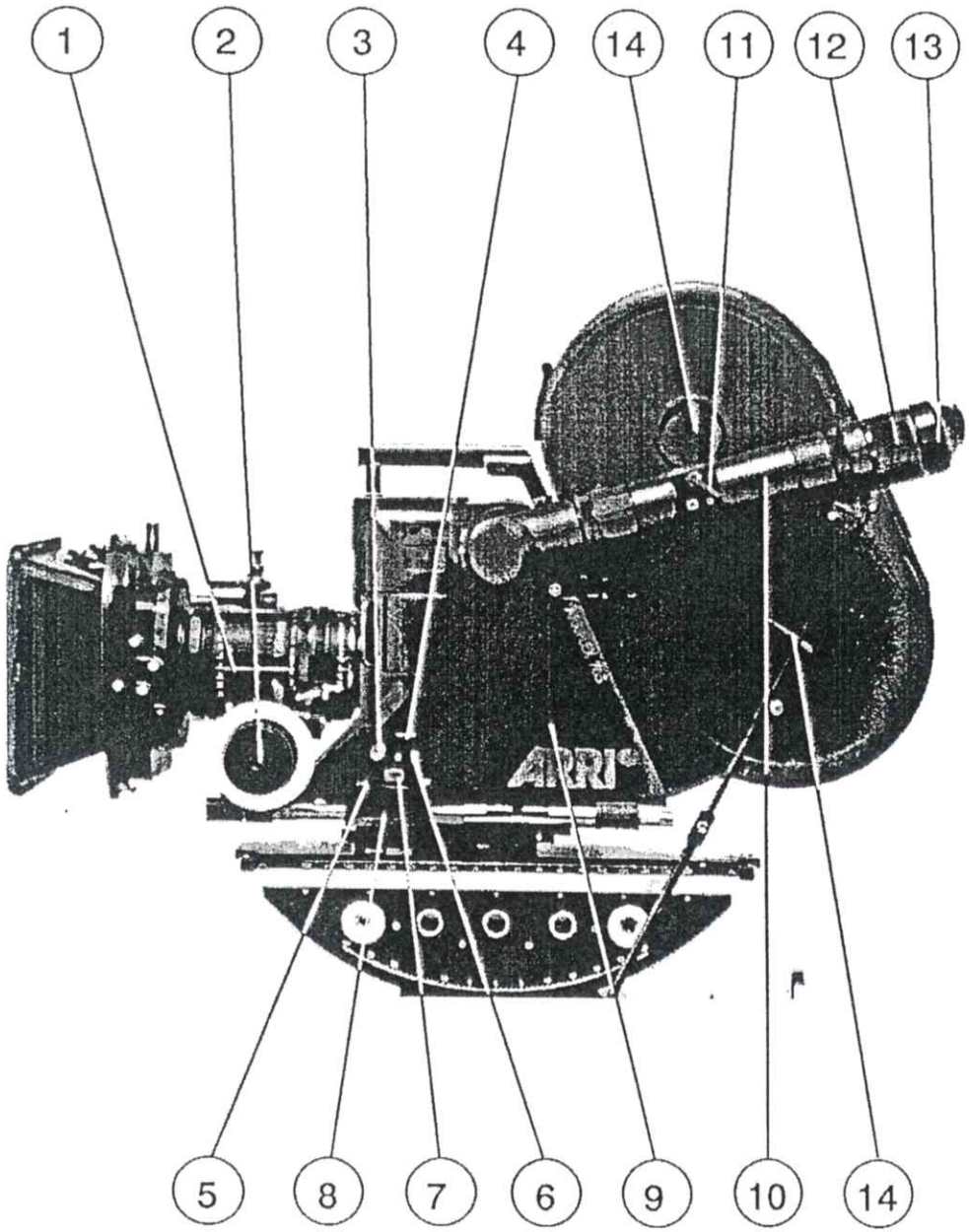

legend to Fig. 1

1 - index line: T-stop/ft/m
2 - follow focus
3 - mechanical advance for mirror shutter
4 - phase shifter/run test switch
5 - nightlight switch
6 - Arriglow switch
7 - side camera run switch
8 - clamping lever for support rod
9 - camera door lock
10- viewfinder extension
11- 2x image magnifier
12- eyepiece with diopter ring
13- eyecup
14- hubs for film tension adjustment

Fig. 2
Right Cameraside

Fig. 2
Right Cameraside

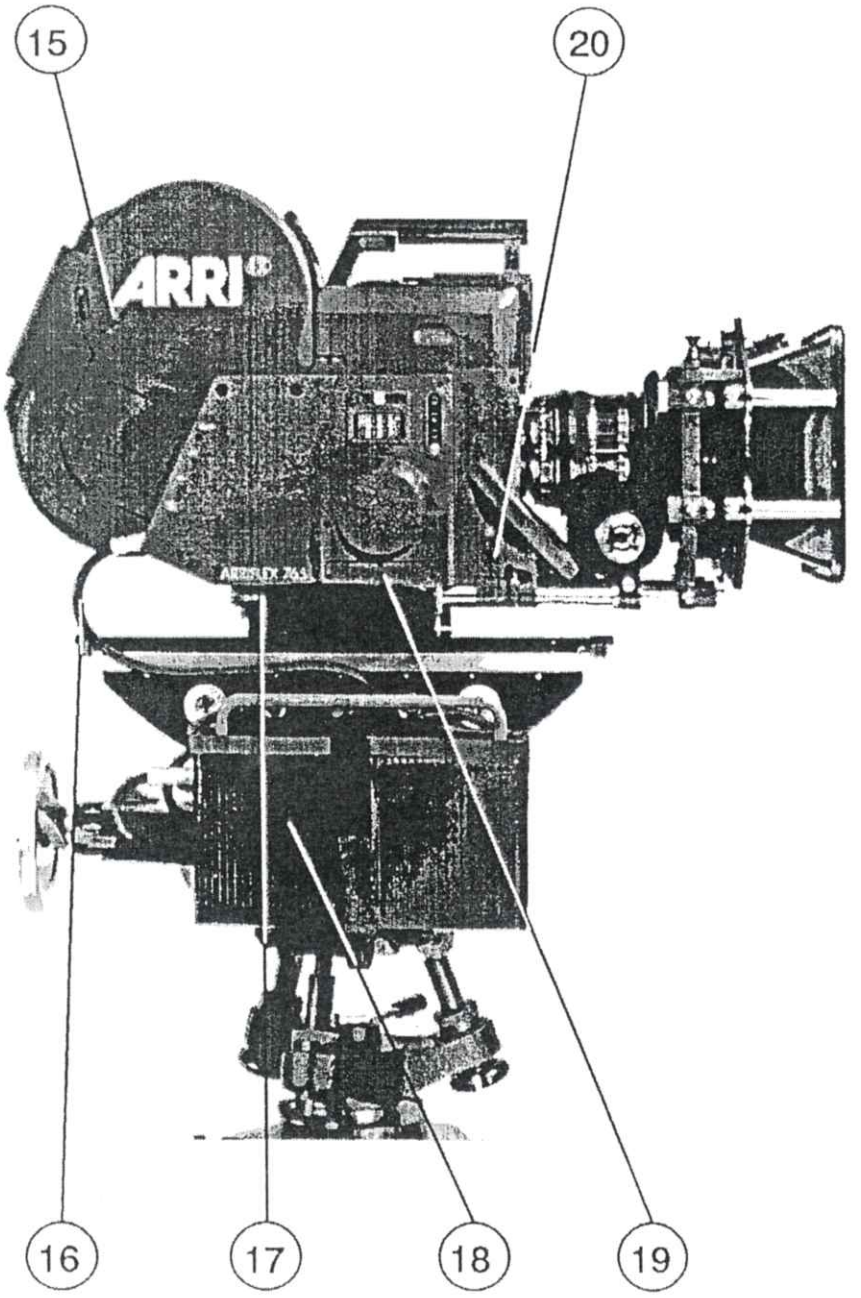

legend to Fig. 2

15- mechanical raw stock counter
16- battery power cable
17- cable holder
18- 24V battery block
19- interface for diagnosis unit
20- frame rate selector and display

Fig. 3
Camera Frontview

Fig. 3
Camera Frontview

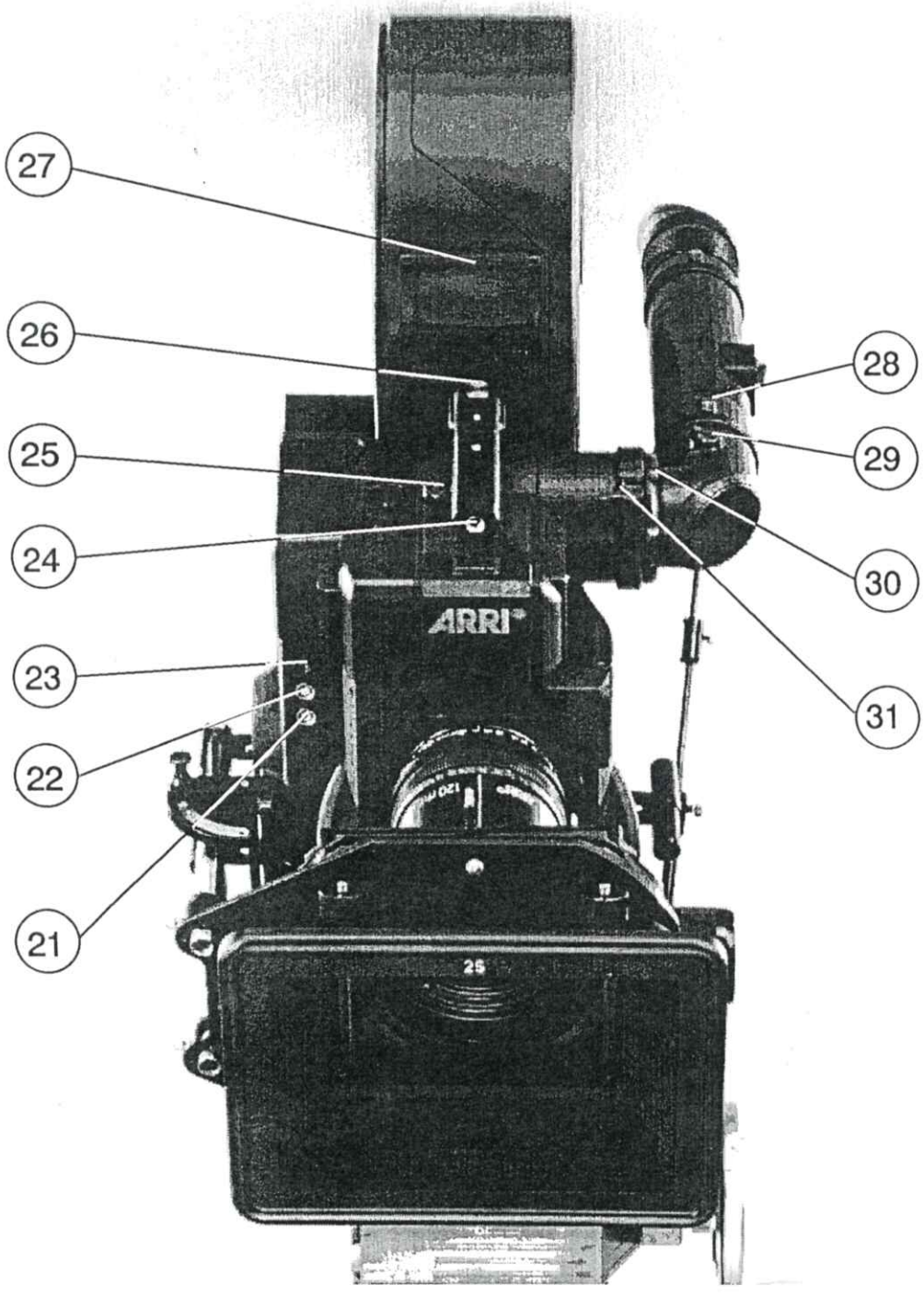

legend to Fig. 3

21- 24V nightlight/accessory socket
22- 24V accessory socket
23- volume knob for sync warning
24- 3/8"-screw thread accessory holder
25- switching lever for video beam splitter
26- hook for tape measure (film plane marker)
27- magazine carry handle
28- viewfinder safety lock
29- lever for ND filter / light trap
30- rotating ring for Schmidt-Pechan prism
31- friction adjust for viewfinder

Fig. 4
Camera Rearview

Fig. 4
Camera Rearview

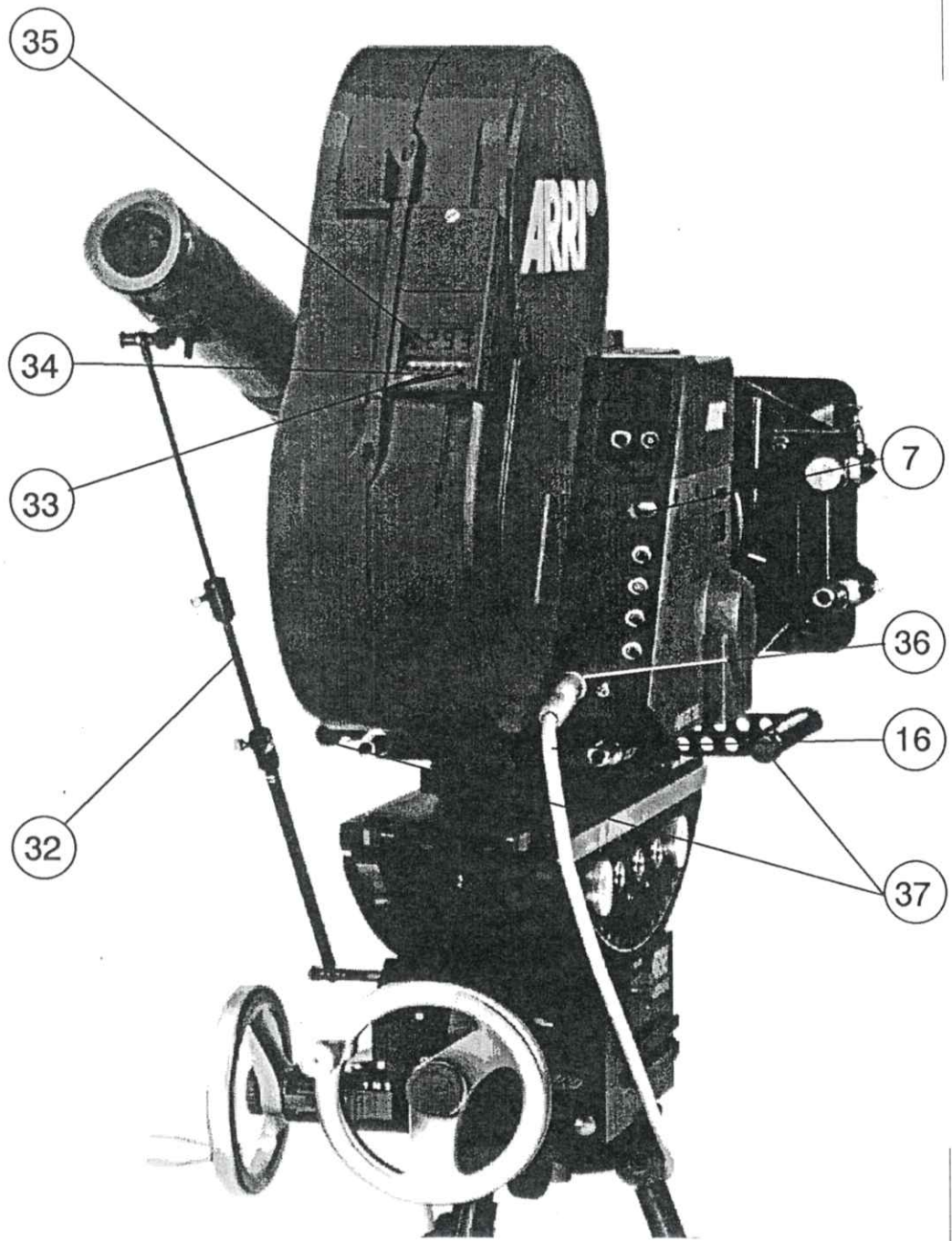

legend to Fig. 4

7 - rear camera run switch
16- battery power cable
32- eyepiece leveling rod
33- LCD input keys
34- display control and illumination key
35- raw stock display
36- main power switch
37- side carry handles

Fig. 5
Inner Camera

Fig. 5
Inner Camera

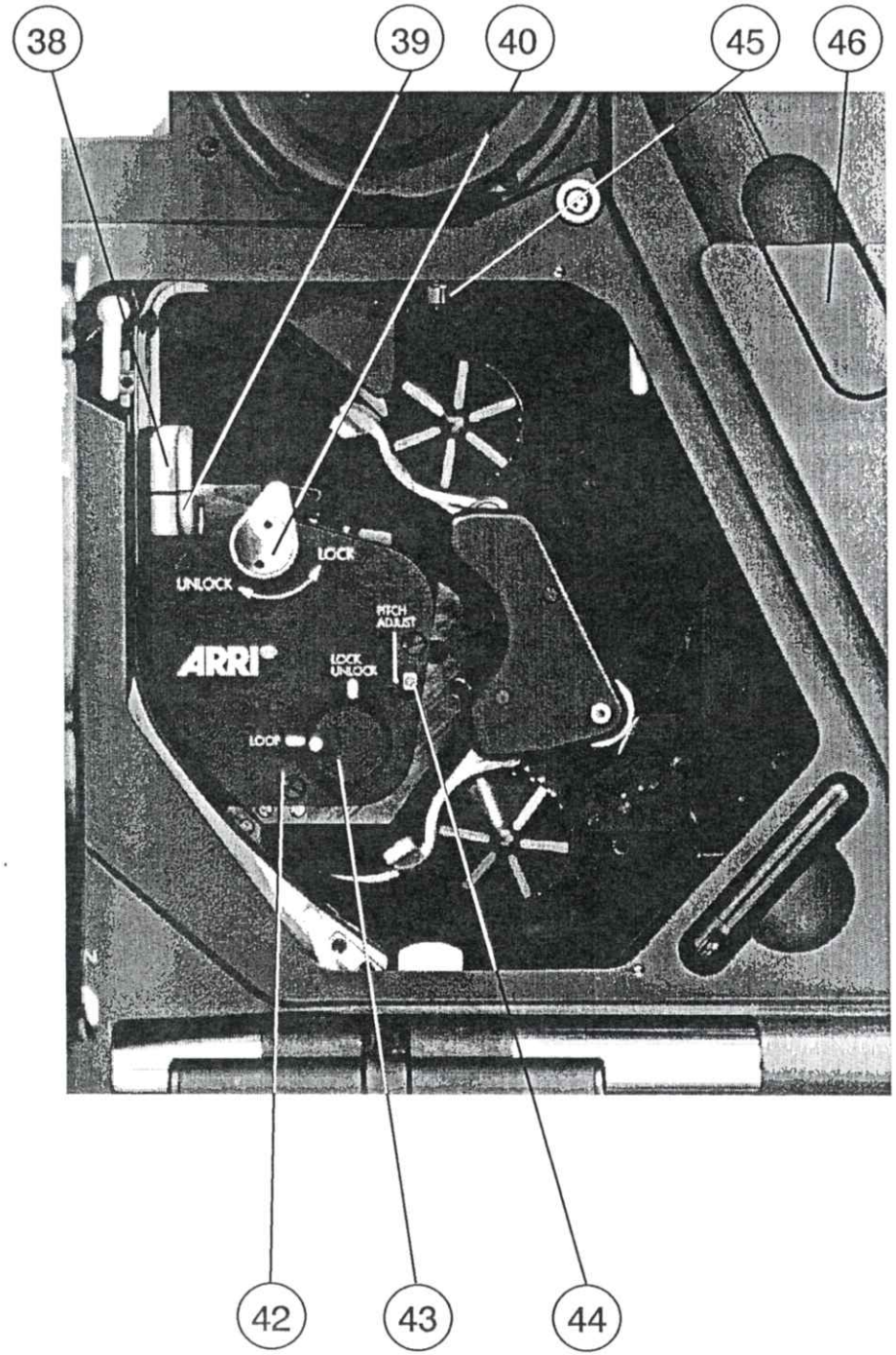

legend to Fig. 5

38- pressure plate with finger grip
39- pressure plate release
40- movement pivoting knob
42- movement
43- inching knob
44- pitch adjustment
45- lever for skeleton mounting
46- recessed magazine lock

INNER CAMERA

The patented, multi-link movement employs dual-pin registration and a dual 3-claw pulldown. The modular film transport (movement + sprocket wheels) provides excellent picture steadiness at all frame rates from 2-100 fps.

The most important elements of the inner camera are the movement, the two sprockets wheels and their sprocket guides, and the upper and lower film guides. The upper film guide includes the aperture plate.

MOVEMENT OVERVIEW

When retracting the movement block *(Fig.5, 42)*, first align the white dot on the inching knob *(Fig.5, 43)* with the position marked LOCK/UNLOCK. To allow access for threading film or cleaning, the movement will now retract when the pivoting knob *(Fig.5, 40)* is turned clockwise. Rotating the knob *(Fig.5, 43)* counterclockwise returns the movement to its locked position. With the movement locked, rotating the inching knob (Fig.5, 43) moves the transport claws, enabling film travel in either direction. In order to minimize camera noise, a pitch-adjustment *(Fig.5, 44)* is integrated. The pressure plate *(Fig.5, 38)* is located on the front edge of the movement. During film travel, the pressure plate holds the film flat in the aperture plate. For cleaning, the pressure plate can be easily removed by turning the release *(Fig.5, 39)* clockwise. The entire film transport module is mounted on a single plate, and is user interchangeable.

MOVEMENT SKELETON MOUNTING

The movement, the film guides, the sprocket wheels and sprocket guides,

Fig. 6
Inner Camera (Movement)

Fig. 6
Inner Camera (Movement)

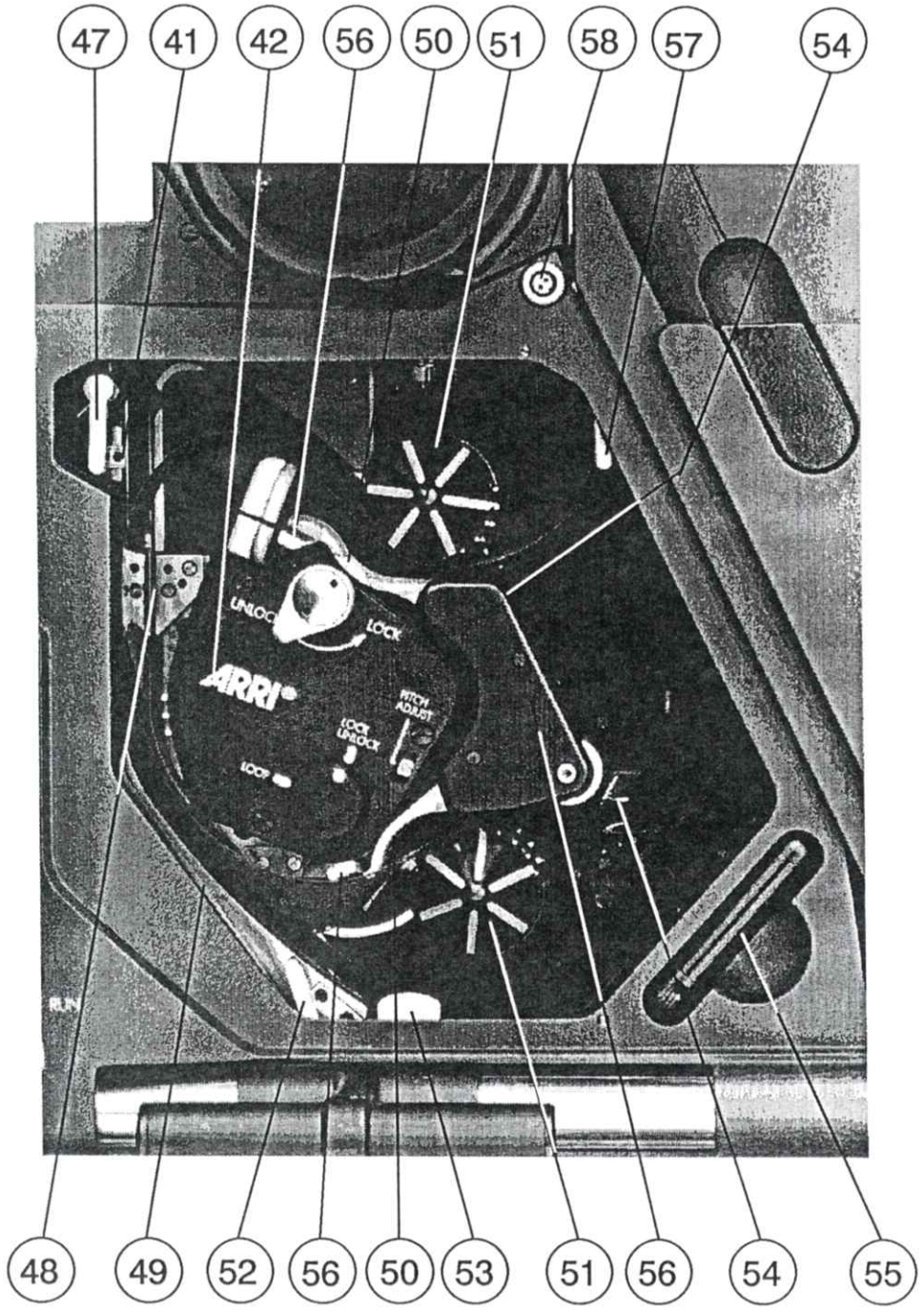

legend to Fig. 6

41- finger grip for upper film guide
42- movement
47- release lever for aperture plate
48- upper film guide with aperture plate
49- lower film guide
50- sprocket guides
51- sprocket wheels with sprocket caps
52- snap release for lower film guide
53- finger grip for lower film guide
54- buckle trips
55- swivelling accessory light
56- locking lever for sprocket guides
57- magazine release
58- socket for heated eyepiece

and the lens block are all fixed on the camera skeleton. This construction guarantees a constant flange focal distance in all filming conditions. The lever for the skeleton mounting *(Fig.5, 45)* can be set in two positions:

When the lever is tilted towards the camera door (forward position) the inner frame or "skeleton" is connected with the camera housing by dampening elements. This position is used for frame rates up to 30 fps.

When the lever is tilted towards the magazine (rear position), the skeleton is directly fixed to the camera body, and the dampening elements are out of function, or in effect bypassed. This allows the camera to run vibration-free at frame rates over 30 fps.

FILM GUIDES AND APERTURE PLATE

The lower film guide *(Fig.6, 49)* directs the film's travel as it approaches the lower sprocket guide *(Fig.6, 50)*. The upper film guide *(with aperture plate, Fig.6, 48)* and the lower guide can be easily removed for cleaning. First release the two snap locks *(Fig.6, 47 and 52)* then lift out the guides carefully using the finger grips *(Fig.6, 41 and 53)*.

SPROCKET WHEELS AND SPROCKET GUIDES

The film is transported by the sprocket wheels *(Fig.6, 51)*. During film threading, depressing the sprocket caps enables independent upper and lower loop size adjustment. After guiding the film over the sprockets, close the sprocket guides *(Fig.6, 50)* using the individual finger grips *(Fig.6, 56)*.

BUCKLE TRIPS

Both buckle trips *(Fig.6, 54)* stop the camera if transport irregularities (jam) should occur. The buckle trips reset automatically.

FILM END

The camera stops 15 ft (5 m) before film end automatically. Depressing the run switch after automatic shut-off will advance the film to roll end and the upper buckle trip stops the camera.

THREADING THE FILM

Remove the magazine throat cover by lifting the magazine release *(Fig.6, 57)*. Next, align the white dot on the inching knob *(Fig.5, 43)* with the position LOCK/UNLOCK. The entire movement block *(Fig.5, 42)* is retracted by turning the movement release knob *(Fig.5, 40)* clockwise. Swing open the sprocket wheel guides *(Fig.6, 50)* using the individual finger grips *(Fig.6, 56)*.

Before mounting the magazine, draw a film loop about "3 fingers" wide from the supply side. Then set the U-shaped guides of the magazine on the rod beneath the camera throat opening. Pivot the magazine forward until the snap lock closes with a strong, audible "click".

When guiding the film around the movement, draw the film from the magazine supply side. First form the upper loop by guiding the film between the sprocket wheel and guide *(Fig.6, 51 and 50)*. Repeat the process with the lower loop. Then guide the film completely into the film channel *(Fig.9, 68)* behind the film guides. Close the sprocket guides.

Position the loop in reference to the upper and lower markings on the camera wall. While closing the movement block into its forward locking position, rotate the inching knob slightly back and forth to engage the pulldown claws with the film perforations.

For exact loop adjustment, align the inching knob's white dot with the position marked LOOP. This fixes the film in the aperture plate *(Fig.6, 48)*. Simultaneously push and turn the sprocket caps *(Fig.6, 51)* to refine the loop size. Be particulary careful that the film does not protrude beyond the lower white film path marking.

Note: When filming at high frame rates, the film loop must be set with extreme accuracy.

Remove all slack using the magazine *(Fig.1, 14)* hubs located on the magazine lid. In order to inspect the film travel, push the phase shifter/run test switch *(Fig.1, 4)*. The integrated threading accessory light *(Fig.6, 55)* will assist film threading under unfavorable lighting.

Note: Always support the magazine before disengaging the release *(Fig.6, 57)*.

ADJUSTABLE PITCH CONTROL

The pitch adjustment *(Fig.5, 44)* is used to ensure optimal transfer of the film from the registration pins to the pulldown claws, thus minimizing camera noise. After inserting the (included) hex key into the socket, run the camera (with loaded magazine) at the desired frame rate. While pushing the key lightly inward, adjust the pitch control to the position providing the quietest running. The adjustment range is limited by mechanical stops. Removing the tool locks the pitch setting in place.

Fig. 7, Fig. 8

Magazine (Threading film)

Fig. 7, Fig. 8

Magazine (Threading film)

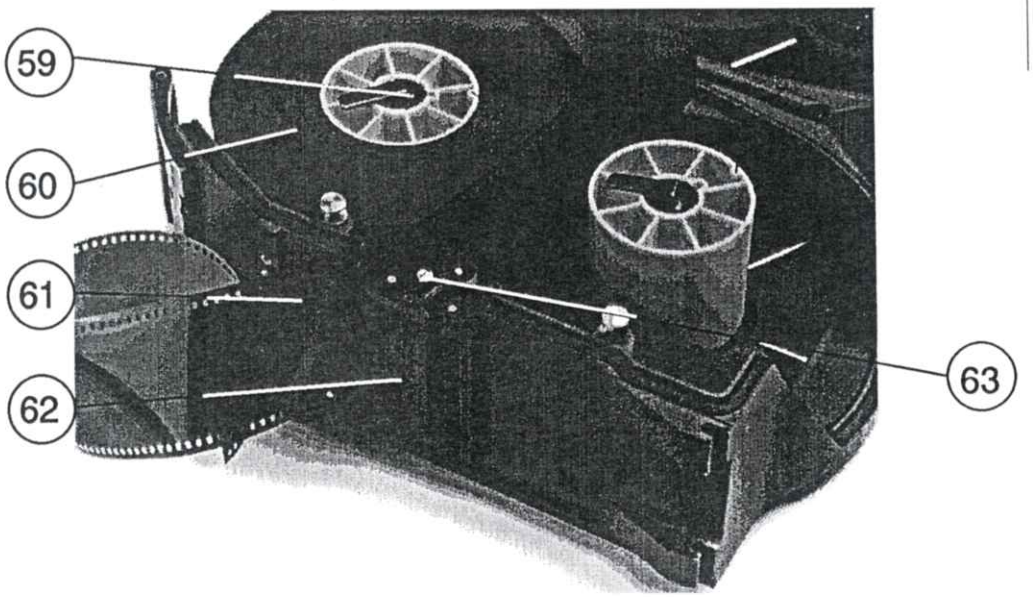

legend to Fig. 7

59- magazine core lock.
60- film roll on supply side
61- film inserted in roller box
62- removable roller box element
63- set screw for removing roller box element

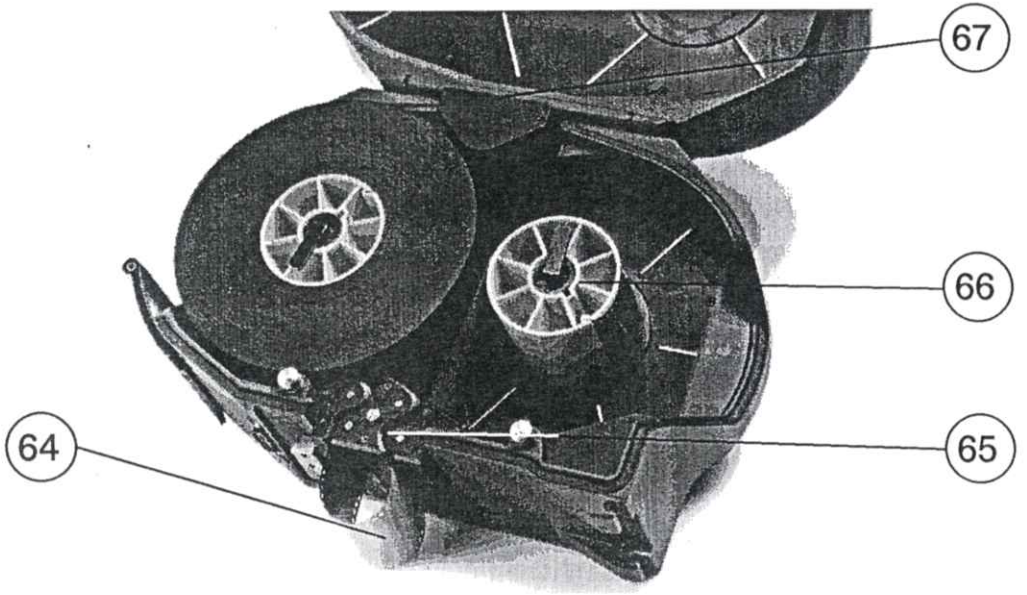

legend to Fig. 8

64- film loop
65- film correctly inserted through roller box
66- film attached to take-up core
67- ft/m counter switch

The pitch adjustment can also compensate for variations in film stock perforation pitch. Consequently, film stock affected by shrinkage or temperature and humidity variations, can be transported trouble free. Only a single pitch setting is required for all speeds from 24-30 fps.

MAGAZINE RELEASE

This lever *(Fig.6, 57)* releases the magazine from the camera body. It must also be released before removing the magazine throat cover. Always support the magazine before disengaging the release using the carry handle *(Fig.3, 27)*.

THREADING ACCESSORY LIGHT

The inner camera contains a threading accessory light *(Fig.6, 55)* which provides illumination for film threading and periodic inspection of the film compartment. This light functions only when removed from its recessed position. It´s in light tighten compartment, when the door is locked.

ADJUSTABLE REFLEX MIRROR SHUTTER

The reflex mirror shutter is adjustable from 15-180°, in 15° steps. Preset openings are included for the commonly used shutter angles of 180°, 172.8°, and 144°.

To adjust the shutter opening, remove the lens or cavity cap. Insert the (included) 2 mm hex key into the mechanical shutter advance *(Fig.1, 3)* or simply turn the inching knob *(Fig.5, 43)* until the shutter adjustment plate is approximately centered in the lens port. Now insert the hex key into the adjustment plate lock.

Fig. 9
Inner Camera (Threading film)

Fig. 9
Inner Camera (Threading film)

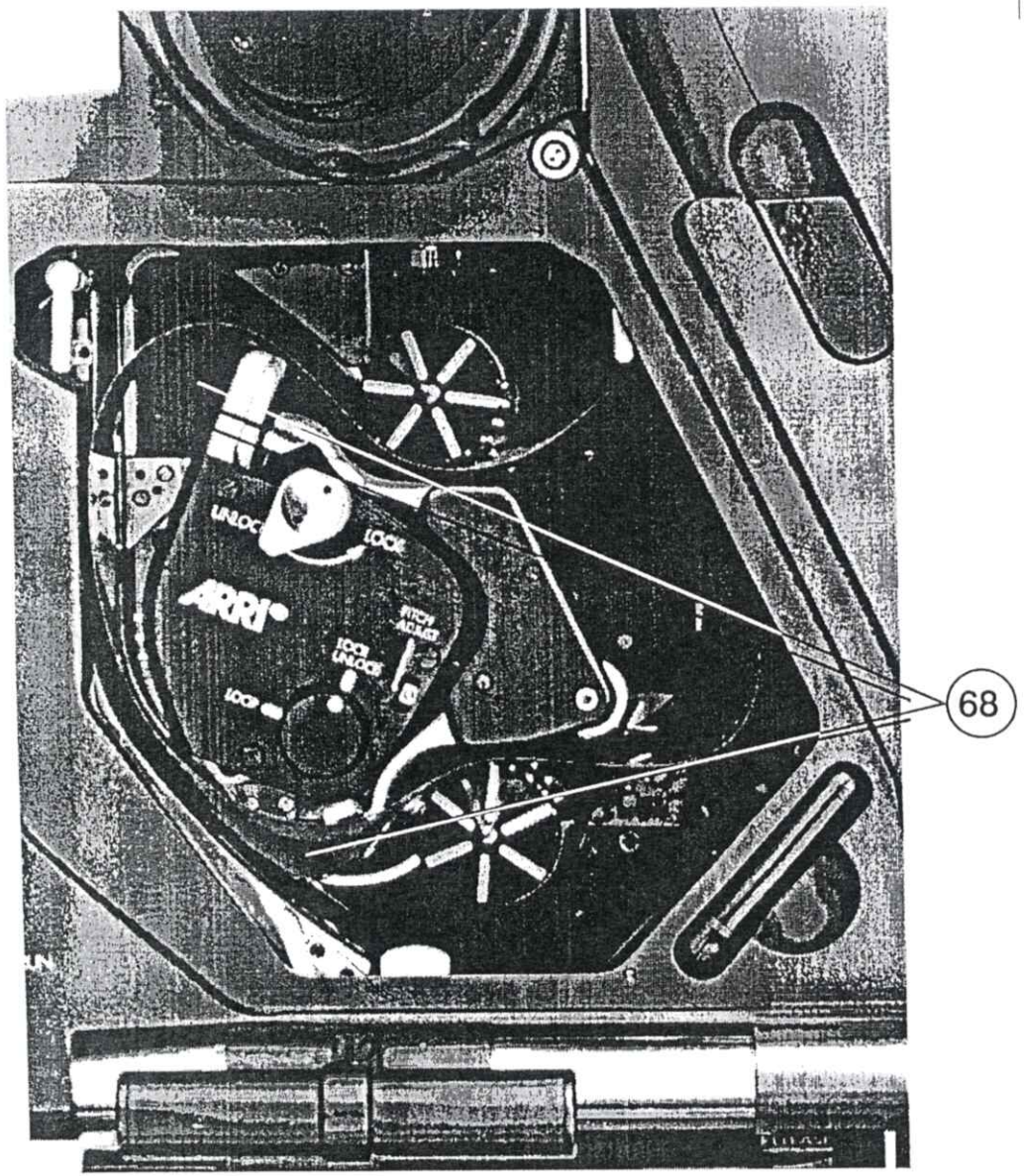

legend to Fig. 9

68- Formed loop is inserted first through sprocket assemblies then into film channel

Release the lock by pushing lightly and simultaneously turning the plate only a few degrees. Release the axial pressure on the key, and continue turning to the next preset stop. The adjustment plate engages there automatically.

Caution: To advance the shutter to the next position, the plate lock must be released again by pushing lightly with the hex key, and turning. Never turn forcibly.

GROUND GLASS

The standard ground glass can be replaced by a fiber optic focusing screen which provides virtually grain free viewing. A combination ground glass/registered matte holder can be inserted for scenes involving composite photography.

The ground glass is located above the mirror shutter and is accessible through the lens port. Screw the (included) threaded tool completely into the screw thread on the ground glass frame. Tilt the tool downward, then carefully pull the screen out through the lens port. Ensure that the new ground glass is absolutely clean. To install, reverse the above procedure. The ground glass is correctly located after it snaps into the holder in a horizontal position.

OPERATING FEATURES

FRAME RATE SELECTOR

The following standard quartz accurate frame rates can be set by inserting the (included) hex key in the frame rate selector socket *(Fig.2, 20)*:

12, 15, 24, 25, 29.97, 30, 60, 75 and 100 fps.
Reverse 24 fps.

The remote control unit (RCU) will provide crystal controlled variable speeds from 2-100 fps, adjustable with an accuracy of 0.01 fps.

CAMERA RUN

The two camera run switches are located on the side *(Fig.1, 7)* and on the rear panel *(Fig.4, 7)*. Both start camera run after the main power switch *(Fig.4, 36)* is turned on.

ELECTRONIC DISPLAY FUNCTIONS

After the main power switch *(Fig.4, 36)* is activated, the camera conducts a short system check. In accordance with the test result, the camera assumes one of three possible modes: READY, STANDBY, or ERROR.

Ready mode

In "ready" mode, the camera is prepared to start the transport motors and begin filming. The left and right side LCD's will automatically indicate the raw stock total on the upper line and actual running speed (fps) below, as

illustrated. Only in "ready" mode is the camera completely prepared for filming.

Ready mode: forward run



symbol field for LCD mode selector



raw stock total in ft or m

actual fps display (tachometer) see *(Fig.10, 73)*

Ready mode: reverse run

When transporting or exposing film in reverse, a bar symbol (-) precedes the fps reading on the lower display line. The raw stock display adds footage during reverse run, thus maintaining an accurate raw stock count. The exposed film counter continues to add footage during reverse filming.

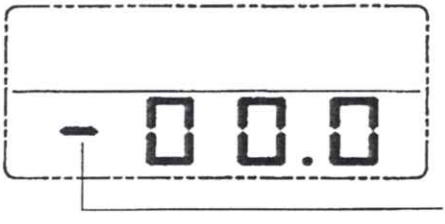

upper display line

FPS display

bar symbol indicates reverse transport

Standby mode

The camera assumes the "standby" mode automatically when camera power is switched on without a magazine on board. The lower display line indicates a flashing pattern:

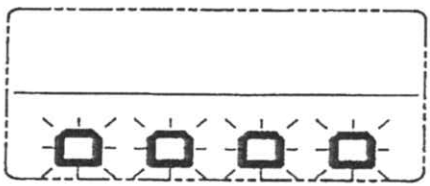

STANDBY symbol:

without mounted magazine

The camera also assumes "standby" when a particular inner camera function requires adjustment. The lower display line indicates which function is improperly set:

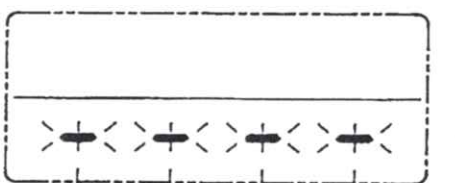

STANDBY symbol:

bar symbol on lower display line

buckle trips activated

sprocket guides not engaged

movement not engaged

skeleton mounting not locked

If the skeleton mounting lever *(Fig.5, 45)* is accidentally set between its two locked positions, the camera will remain in "standby" until the switch is locked. If the lever is improperly set for speeds above 30 fps, the camera also remains in "standby". The lower display line indicates "FPS" until the lever is set to its rear locked position.



STANDBY symbol:

FPS symbol on lower display line

skeleton mounting not activated for speeds over 30 fps

Error mode

The camera's diagnostic system provides numerical references on the source of operating malfunctions, immediately when they occur. This integrated diagnosis feature and the camera's modular construction simplify and expedite repairs and parts replacement. The lower display line will indicate a 3-digit code number in accordance with the diagnosis guide below. More information on the camera status can be obtained by a service technician using the diagnosis unit. Exiting the "error" mode, after a specific repair, is achieved by turning the main power switch *(Fig.4, 36)* off, then on again. Additional information on this low-maintenance service concept is available from ARRI.

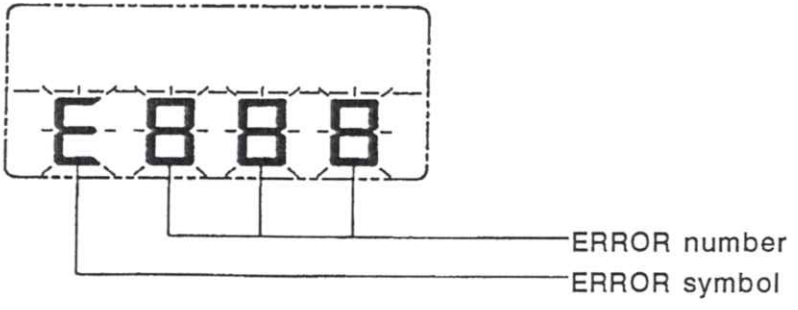

Abbreviated error diagnosis guide:

Error number	Malfunction
000 - 099	run-up
100 - 199	tachometer
200 - 299	magazine
300	sprocket guides
400	movement position
500 - 599	shutter brake
600 - 699	movement block

CALLING UP DISPLAY FUNCTIONS

The following information can be accessed with the mode selection key *(Fig.10, 74)*:

( ) shutter opening (degrees)
(f) or (m) raw stock (feet or meters)
( ) exposed film (f/m daily aggregate sum)

The function accessed for display is read on the LCD's upper line, and indicated by the illuminated character on the symbol field directly above.



symbol field in mode for exposed film sum (m)



upper display line read out (m)

FPS display (tachometer)

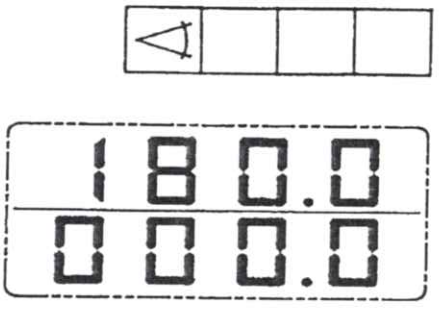

symbol field in mode for shutter opening

shutter opening (degrees)

FPS display (tachometer)

RESETTING THE EXPOSED FILM COUNTER

The exposed film counter keeps a running total (aggregate sum) of film passed through the camera. It can be reset by simultaneously pressing the camera-left mode selection key *(Fig.10, 74)*, and switching on the camera power.

RUNNING WITHOUT MAGAZINE

For testing purposes, the camera can be run without a magazine. Pressing the camera-right mode selection key while switching on camera power, initiates camera running, until the power is switched off.

WARNING DISPLAY

The warning displays *(Fig.10, 70)* include four indicators on both camera left and right. When illuminated, the symbols alert the operator and assistant of the following malfunctions:

BAT: Battery block has insufficient charge.

JAM: Buckle trips activated, film loop inside camera requires inspection.

ASY: Asynchronous running of shutter and movement, or deviation from selected frame rate.

END: Begins flashing with 30 ft (10m) raw stock remaining. Camera stops with 15 ft (5m) film remaining. Depressing the run switch enables the film load to be rolled out.

All warning indicators (exception: JAM signal) are also visible in the viewfinder.

Note: It is essential to ensure that the pressure plate *(Fig.5, 38)* is properly positioned after any inner camera malfunction.

PHASE SHIFTER/RUN TEST SWITCH

This switch *(Fig.1, 4)* fulfills a double function:

In "standby" - the film advances advances at approximately 1.5 fps, allowing inspection of film travel.

During running - the exposure interval can be synchronized with that of a quartz controlled video monitor. The phase shifter is depressed until the larger black roll bar is positionedout of the monitor's frame.

Fig. 10
Displays & Warningdisplays

Fig. 10
Displays & Warningdisplays

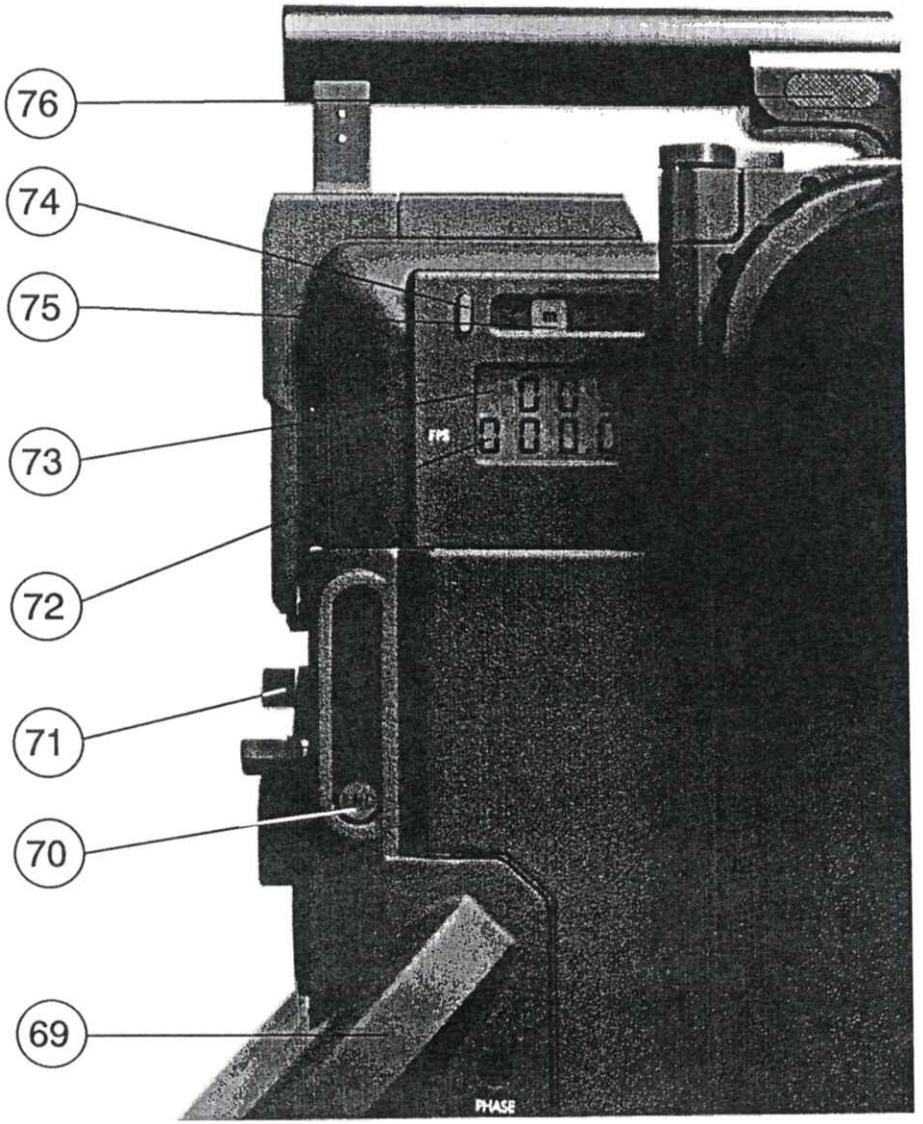

legend to Fig. 10

69- rotating mirror shutter
70- warning displays
71- bayonet locking ring (PL-mount)
72- frame rate display (fps)
73- upper display line (mode selectable)
74- display mode selection key
75- symbol fields for:
    shutter opening
    raw stock (m)
    raw stock (ft)
    exposed film sum (ft/m)
76- release for retractable carry handle

NIGHTLIGHT SWITCH

A 24V DC assistant's lamp or other accessory can be connected to the nightlight socket *(Fig.3, 21)*. Power for the accessory is controlled by the nightlight switch *(Fig.1, 5)*.

THE SYSTEM

LENSES

This new series of Zeiss/ARRIFLEX lenses feature excellent sharpness, contrast and color consistency. The ARRIFLEX 765 employs a 64 mm PL-mount with a bayonet locking ring. Lenses are mounted by turning the bayonet ring clockwise. Due to the rigidity of the lens mount and inner camera, no lens support is required. All lenses can be mounted either with scales facing camera left or right, or with a vertical orientation.

With exception of the 350mm/T4.2, the focusing scales are located uniformly lens to lens, for easy reference. The constant front lens diameter of 114 mm allows use of a single matte box. The 30mm/T3.6 includes a rear filter holder for gelatine filters. Its 110° horizontal angle of view precludes using the standard matte box. The coated optical flat protects lenses against dust and damage. It also closes the optical system to the front, providing additional noise insulation.

Lens table

lens type	focal length	aperture range (T)	comparable focal length in 35 mm format
F-Distagon	30 mm	3.6 - 32	--
Distagon	40 mm	4.2 - 32	18 mm
Distagon	50 mm	3.0 - 22	24 mm
Distagon	60 mm	3.6 - 32	28 mm
Planar	80 mm	3.0 - 22	35 mm
Planar	100 mm	3.6 - 32	46 mm

Planar	110 mm	2.1 - 16	50 mm
Macro-Planar	120 mm	4.2 - 32	55 mm
Sonnar	150 mm	3.0 - 22	70 mm
Tele-Tessar	250 mm	4.2 - 45	115 mm
Tele-Tessar	350 mm	4.2 - 45	150 mm
Tele-Tessar[1)]	700 mm	8.4 - 90	300 mm

1) with 2x Mutar range extender

ARRIGLOW VIEWFINDER AND VIDEO ASSIST

The high aperture viewfinder provides an illuminated frame outline for night and low light filming. Both automatic and manual orienting of the viewing image are provided by the integrated "Schmidt-Pechan" prism. For manual orienting of the image, turn the viewfinder rotating ring *(Fig.3, 30)* to adjust the image for any viewing position.

The viewfinder rotates 360 degrees. Loosening the friction adjustment *(Fig.3, 31)* allows the viewfinder to be pivoted and set in any intermediate position. Tightening the friction adjustment sets the viewfinder drag. Both a neutral density filter (ND 0.6) and a shutter/light trap are integrated and controlled by the lever *(Fig.3, 29)*.

The viewfinder extension *(Fig.1, 10)* is mounted between the fixed component of the viewfinder and the eyepiece *(Fig.1, 12)*. In order to better judge picture detail, and to achieve better focusing, a pivoting 2x magnifier is included *(Fig.1, 11)*. Rotate the turning ring of the "Schmidt-Pechan" prism 180 degrees to the second click-stop to ensure an upright viewing image.

The mini-bayonet mount of the eyepiece is equipped with a safety lock

(Fig.3, 28). To remove the eyepiece, turn the bayonet ring counterclockwise to the stop, then depress the locking lever. The bayonet ring can now be rotated completely, and the eyepiece and viewfinder extension interchanged.

The eyepiece leveling rod attaches to the viewfinder extension and is compatible with the ARRIHEAD and other appropriate 35 mm support systems.

The heated eyepiece provides clear, comfortable viewing within a +/- 3 diopter range. The eyecup *(Fig.1, 13)* is 360 degrees rotatable. The large eyepiece exit pupil allows the whole image to be viewed comfortably.

A video assist module can be attached to the viewfinder's video beam splitter. Turning the lever *(Fig.3, 25)* from "viewfinder" to "video", allows the beam splitter to relay an image to the video camera. 80/20, 50/50 and 100% video (for remote control) beam splitters are available on request and can be interchanged by a qualified service technician.

6.6"X6.6" SWING-AWAY MATTE BOX

The new matte box system was designed for both 65 mm and 35 mm applications. It accomodates all lenses in the system except the ultra-wide 30mm/T3.6. The interchangeable filter stages are rotatable, available with gear-driven frames, and accomodate up to six standard 6.6"x6.6" filters. The two thumbscrews provide vertical and horizontal adjustment for precise alignment with lenses.

DISPLACEMENT MAGAZINES

The system employs light weight, aluminum magazines in two sizes:

1000 ft (300m) / 500 ft (150m)

The lid is opened by lightly lifting and turning the recessed locking lever *(Fig.5, 46)*. For easy cleaning, the roller box element *(Fig.7, 62)* can be unscrewed by the assistant *(Fig.7, 63)*.

To load, place the film roll over the supply core, engaging the key in the key way. Secure the film roll by flipping down the magazine core lock *(Fig.7, 59)*. Insert the film from above into the roller box channel nearest the supply core. Feed the film directly back through the second channel, leaving a small film loop *(Fig.8, 64)*. When properly threaded, the film will sit completely immersed in the roller box channels *(Fig.8, 65)*. Secure the film to the take-up core with a minimum of 3 complete revolutions. Replace the magazine cover and lock it by turning the lever *(Fig.5, 46)* clockwise. Before transporting, snap on the throat cover to protect both film loop and electronic connections. Magazine torque motors require no user adjustment. Magazine hubs are used to manually ensure proper film tension, especially for high speed filming.

MAGAZINE UNEXPOSED FILM COUNTERS

Film raw stock total is entered on the magazine LCD *(Fig.4, 35)*. The 4 keys below the display allow data entry. The control key *(Fig.4, 34)* also illuminates the LCD when the magazine is detached or the camera is switched off. Simultaneously depressing this key with another input key *(Fig.4, 33)*, will enter a new footage count into the display memory. The raw stock total is transferred to the camera display automatically *(Fig.10, 73)*

when the magazine is mounted and can only be changed by simultaneously depressing two keys. This prevents an accidental change of film count.

The raw stock display can be programmed for either feet or meters. The ft/m counter switch *(Fig.8, 67)* is located inside the magazine behind the motor covering - easily accessible for the camera assistant. The magazine also provides a mechanical raw stock counter *(Fig.2, 15)* indicating film supply in quarter-load increments. This provides an approximate raw stock total for the LCD, when using short ends of unknown length.

Note: Magazine tension hubs should always face up when magazines are placed into their cases *(Fig.1, 14)*.

QUICK-RELEASE BASE AND UNIVERSAL FOLLOW FOCUS

The ARRIFLEX 765 features an integrated, standard quick-release bridge plate and adjustable lens rods. This allows the camera to attach directly to the ARRIHEAD sliding base, or other 35 mm touch'n'go tripod heads.

The 2-speed, left-right side, universal follow focus accompanies all lenses in the system. Standard 35 mm crank and flexible (whip) extensions are compatible.

CAMERA POWER SUPPLIES

The new 24V DC system better accomodates multiple electrical accessories and high speed filming. Two 24V DC, rubber-cased, water-

resistant battery blocks provide the system significantly longer running times:

24V DC / 7Ah for normal operation
24V DC / 14Ah for filming above 60 fps

The 110/220V AC power supply and 24V DC quick charger complete the power system.

TECHNICAL DATA

Format	65 mm
Sound level	<25 dBA at 24 fps, 28.5 dBA at 30 fps
Picture steadiness	0.1% of frame height at all filming speeds and double exposure
Transport	dual 3-claw pulldown, dual pin registration
Aperture	2.07 x 0.91 in, 52.50 x 23.00 mm
Ground glass/Projection area	1.91 x 0.87 in, 48.50 x 22.00 mm
Projection aspect ratio	2.2:1
Frame rates	12, 15, 24, 25, 29.97, 30 fps, 60 , 75, 100, reverse 24 fps, 2-100 fps crystal-controlled with remote control unit
Adjustable reflex mirror shutter	180°, 172.8°, 144°: preset, 180° - 15°: adjustable in 15° steps (preset)
Viewfinder magnification	4x actual size, 8x with 2x image magnifier
Diopter range	+/- 3 diopters
Contrast filter	ND 0.6 integrated
Video prism	80/20, 50/50 and 100% video versions on request
Lens mount	64 mm diameter Maxi PL mount
Flange focal depth	73.5 mm

Displays:

Camera LCD's ____ unexposed film count,
shutter angle,
exposed film count,
camera running speed,
standby message, error message

Magazine LCD ____ unexposed film count

Warning display ____ out of synch*),
low battery*), film end*),
jam, running lamp

External connections:

In ____ 24V DC camera power,
remote control/variable speed,
external sync,
time code,
diagnosis unit,
shutter control

Out ____ 2 x 24V DC accessory connectors
(1-switched, 1-unswitched),
heated eyepiece,
video out

Motors ____ 2 crystal controlled
DC motors for movement and shutter,
2 magazine torque motors

Power consumption ____ 24V DC / 7Ah NC,
24V DC / 14Ah NC over 60 fps

Run-up time ____ 0.8 seconds at 24 fps,
2.5 seconds at 100 fps

*) visible in viewfinder

Dimensions (without lens)

with 500 ft magazine: Length 22.4" (570 mm),
Width 14.6" (370 mm),
Height 15.7" (400 mm)

with 1000 ft magazine: Length 24.8" (630 mm),
Width 14.6" (370 mm),
Height 20.9" (530 mm)

Weight (without lens)

with loaded 500 ft magazine: Approx. 70 lbs,
(Approx. 32 kg)

Temperature range -4° F to +122° F,
(-20° C to +50° C)

Camera base Integrated quick-release