ALEXA 35

ALEXA 35 Xtreme • ALEXA 35 Live
Software Update Package 6.2.0

USER MANUAL

October 2026 • 6.2 • English

D4510006704 • K11816

Disclaimer

Before using the product, be sure to read and understand all respective instructions.

The product is available for commercial customers only.

For product specification changes since this document was published, refer to the latest publications of ARRI data sheets or data books, etc., for the most up-to-date specifications.

Not all products and / or types are available in every country. Please check with an ARRI sales representative for availability and additional information.

The information given in this document is subject to change without notice.

While ARRI endeavors to enhance the quality, reliability and safety of their products, customers agree and acknowledge that the possibility of defects thereof cannot be eliminated entirely. To minimize risk of damage to property or injury (including death) to persons arising from defects in the products, customers must incorporate adequate safety measures in their work with the system and have to heed the stated canonic use.

ARRI or its subsidiaries expressly exclude any liability, warranty, demand or other obligation for any claim, representation, or cause, or action, or whatsoever, express or implied, whether in contract or tort, including negligence, or incorporated in terms and conditions, whether by statue, law or otherwise. In no event shall ARRI or its subsidiaries be liable for or have a remedy for recovery of any special, direct, indirect, incidental, or consequential damages, including, but not limited to lost profits, lost savings, lost revenues or economic loss of any kind or for any claim by third party, downtime, good will, damage to or replacement of equipment or property, any cost or recovering of any material or goods associated with the assembly or use of our products, or any other damages or injury of the persons and so on or under any other legal theory.

Neither ARRI nor its subsidiaries assume any liability for infringement of patents, copyrights or other intellectual property rights of third parties by or arising from the use of ARRI products or any other liability arising from the use of such products. No license, express, implied or otherwise, is granted under any patents, copyrights or other intellectual property right of ARRI or others.

In the case one or all of the foregoing clauses are not allowed by applicable law, the fullest extent permissible clauses by applicable law are validated.

ARRI or its subsidiaries do not assume any responsibility for incurred losses due to improper handling or configuration of the camera or other system components, due to sensor contamination, occurrence of dead or defective pixels, defective signal connections or incompatibilities with third party recording devices.

Document Revision History

Document ID: D45 10006704

Version	Release	Date	Note
1.0	K10948	July 2022	Initial release
1.1	K11240	May 2023	Release for SUP 1.1
1.2	K11289	July 2023	Release for SUP 1.2
1.21	K11380	December 2023	Release for SUP 1.2.1
1.3	K11458	June 2024	Release for SUP 1.3.0
2.0	K11479	September 2024	Release for SUP 2.0.0
2.2	K11533	December 2024	Release for SUP 2.2.0
4.0	K11585	January 2025	Release for SUP 4.0.0
5.0	K11660	July 2025	Release for SUP 5.0.0
5.1	K11682	September 2025	Release for SUP 5.1.0 Document ID corrected
5.2	K11703	October 2025	Release for SUP 5.2.0
6.0	K11755	March 2026	Release fur SUP 6.0.0
6.1	K11784	July 2026	Release for SUP 6.1.0
6.2	K11816	October 2026	Release for SUP 6.2.0

Imprint

© 2024 – 2026 Arnold & Richter Cine Technik GmbH & Co. Betriebs KG. All rights reserved.

The product contains proprietary information of Arnold & Richter Cine Technik GmbH & Co. Betriebs KG; it is provided under a license agreement containing restrictions on use and disclosure and protected by copyright law. Reverse engineering of the software is prohibited.

No part of this publication shall be used for distribution, reproduction, transmission, transcription, storage in a data retrieval system, or translated into any language in any form by any means without the prior written permission of Arnold & Richter Cine Technik GmbH & Co. Betriebs KG.

If you are downloading files from our web pages for your personal use, make sure to check for updated versions.

ARRI cannot take any liability whatsoever for downloaded files, as technical data are subject to change without notice.

Due to continued product development the information in this document may change without notice. The information and intellectual property contained herein is confidential between ARRI and the client and remains the exclusive property of ARRI. If you find any problems in the documentation, please report them to us in writing. ARRI does not warrant that this document is flawless.

ARRI, ALEXA 35, ARRIRAW and ARRICORE are trademarks or registered trademarks of Arnold & Richter Cine Technik GmbH & Co. Betriebs KG. All other brands or products mentioned are trademarks or registered trademarks of their respective holders and should be treated as such.

Apple ProRes 422 HQ, Apple ProRes 4444, Apple ProRes 4444 XQ, and the ProRes logo are trademarks or registered trademarks of Apple Computer, Inc., used under license therefrom.

Initial Language

The initial language of this user manual is English. User manuals in other languages are translations from English.

In the event of conflict between the respective languages (i.e. if any translation(s) of present document has/have been prepared for convenience or any other purpose), with regards to the meaning or interpretation of a word or an instruction etc., the contents and provisions of the English language version shall prevail.

Original version.

For Further Assistance

Arnold & Richter Cine Technik GmbH & Co. Betriebs KG

Herbert-Bayer-Str. 10

D-80807 Munich

Germany

E-mail: service@arri.de

Website: www.arri.com/en/technical-service/

Table of Contents

1 About this Document ... 8

2 Camera Body Overview ... 10

3 Multi Viewfinder MVF-2 Overview ... 16

4 Camera Control Monitor CCM-1 Overview ... 20

5 Power Supply ... 22

6 Menu Operation ... 25

6.1 HOME Screen ... 26
6.2 To Use Lists and to Import Files ... 28
6.3 On-screen Keyboard ... 30
6.4 Side Display ... 30
6.5 User Storage ... 31
6.6 Info Screens ... 33

7 Status Information and Overlays ... 35

8 Main Parameters ... 40

8.1 Project Settings ... 40
8.2 Sensor Frame Rate ... 41
8.3 Sensor Overdrive ... 41
8.4 Shutter ... 43
8.5 Exposure Index ... 43
8.6 ND Filter ... 45
8.7 White Balance ... 45
8.8 Timecode ... 46

9 Look Settings ... 48

9.1 Color Processing and Color Space ... 48
9.2 ARRI Look File ALF-4 ... 50
9.3 To Set the Look ... 52
9.4 Look Intensity ... 52

10 ARRI Textures ... 53

11 Recording ... 56

11.1 Recording Medium ... 56
11.2 Recording Codec ... 58
11.3 Sensor Mode & Recording Resolution ... 61
11.4 To Start Recording ... 65
11.5 Pre-recording ... 66
11.6 Clip Naming Scheme ... 68
11.7 Audio Recording ... 68
11.8 Rec Beeper ... 71

12 Playback ... 72

13 Monitoring **74**
13.1 Surround View 74
13.2 Magnification 75
13.3 Frame Lines 76
13.4 False Color 78
13.5 Peaking 78
13.6 Zoom 80
13.7 Shared Focus Marks and Overlay 82
13.8 SDI Settings 84
13.9 EVF and Flip-out Monitor Settings 87
13.10 Return In 89
13.11 SDI Color Bars 90

14 User Buttons **91**

15 Synchronization **94**

16 Sensor Settings **95**
16.1 To Mirror the Sensor Image 95
16.2 User Pixel Masking 95

17 System Settings **97**
17.1 Language Setting 97
17.2 System Time and Date 97
17.3 Button and Display Settings 97
17.4 Fan Settings 97
17.5 Reset of Electronic Horizon 98
17.6 GPS Metadata 98
17.7 Update 98
17.8 Licensing 100

18 Multicam **104**
18.1 Live Painting 104
18.2 Tally Settings 105
18.3 Restrict Local Camera Control 106
18.4 Exposure Compensation (Zoom) 106

19 User Setups **107**
19.1 User Setup Parameter Blocks 107

20 Network **110**
20.1 WiFi Settings 110
20.2 Ethernet Settings 113
20.3 Streaming Metadata 113

21 Metadata **115**

22 Lens & Electronic Control System **116**
22.1 Lens Data 116
22.2 Lens Data Archive 117
22.3 White Radio Configuration 118
22.4 Lens Motors 119

22.5 To Change a Lens ... 121
22.6 EF Lens Iris Adjustment ... 122
22.7 Enable Lens Mount ... 122
22.8 Diopter Compensation (BETA) ... 123

23 Remote Control ... 125
23.1 Web Remote ... 125
23.2 Camera Access Protocol ... 126
23.3 Camera Companion App ... 127
23.4 Hand Units Hi-5 and WCU-4 ... 127

24 ALEXA 35 Accessories ... 128
24.1 Lens Mounts ... 128
24.2 Mechanical Accessories ... 131
24.3 Electronic Accessories ... 137
24.4 Battery Adapters ... 138
24.5 ALEXA 35 Components Overview ... 139

25 Appendix ... 140
25.1 Maximum Frame Rates by Sensor Mode, Recording Resolution and Codec ... 140
25.2 Sensor Related Information ... 141
25.3 Companion Tools ... 142
25.4 Connector Pinouts ... 143
25.5 Dimensional Drawings ... 146

1 About this Document

This user manual contains detailed information about the features and functionalities of the device. Please visit the website www.arri.com to download the operating manual and much more information about this and other ARRI products.

The separate operating manual is aimed at everyone involved in using the device. It provides directions on how to operate it safely and as intended. To ensure safe and correct use, all users must read the operating manual before using the device for the first time.

Keep all manuals and all other operating and assembly instructions belonging to the device in a safe place for future reference and possible subsequent owners

For useful information in addition to these manuals please have a look at the ARRI learn & help section on the ARRI website.

The ARRI Academy courses provide unrivalled insights into the full possibilities of working with ARRI camera systems, lenses, lighting systems and accessories.

Our advanced service training courses are designed to transfer detailed knowledge about how to service and repair all types of ARRI products and give you permanent access to detailed service instructions, special tools and service parts. To learn more, please visit ARRI academy or contact academy@arri.de.

1.1 Product Information Resources

The ARRI documentation portal provides important documents on the product for free download.

Please use the following search keys in the search bar to retrieve the documents for the product:

ALEXA 35, K1.0039373

ALEXA 35 Live – Multicam System Standard, K0.0051070

ALEXA 35 Xtreme, K1.0053455

ARRI documentation portal

For more information about the product, please refer to the ARRI website at:

ARRI ALEXA 35 product page

1.2 How to Use this Manual

All directions are given from a camera operator's point of view. For example, camera right side refers to the right side of the camera when standing behind the camera and operating it in a normal fashion.

Connectors are written in all capital letters, for example “AUDIO connector”.

Buttons are written in italic typeface capital letters, for example “*PLAY* button”.

Menu paths are written in italic typeface, with menu and home in capital letters, for example “*MENU* > *Recording* > *Sensor Mode*”.

“EVF” refers to the OLED eyepiece of the MVF-2 viewfinder.

“Monitor” refers to the flip-out monitor of the MVF-2 viewfinder.

“VF” refers to the viewfinder connectors VF 1 and VF 2. When settings refer to VF, they affect the EVF and the flip-out monitor.

“Monitoring outputs” refers to EVF, flip-out monitor, SDI 1, and SDI 2.

"Status Info" refers collectively to the Status Info of EVF, SDI 1 and SDI 2.

2 Camera Body Overview

Camera Front

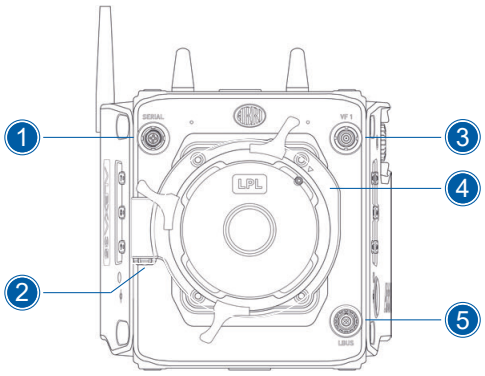

1 SERIAL Connector
2 LBUS Connector (on lens mount)
3 VF 1 Viewfinder Connector
4 Lens Mount (here: LPL Mount)
5 LBUS Connector

SERIAL Connector (LEMO 4pin)

Use the SERIAL connector to connect distance measurement devices such as ARRI UDM-1, or the Focus Bug Cine RT system directly to the camera. The interface supports bi-directional communication and supplies power to the distance measuring device.

You can connect an NMEA 0183-compliant GPS module to the connector to embed dynamic GPS metadata into the recorded clips as an alternative. The SERIAL connector supplies regulated 12.0 V DC with a maximum current of 200 mA.

VF 1 Viewfinder Connector (CoaXPress)

The camera uses an industrial CoaXPress interface with a custom ARRI connector to connect the MVF-2 viewfinder and the Camera Control Monitor CCM-1 to the camera. The interface transmits power, video, and control data. It supports cable lengths of up to 10 m (33 ft). The VF connector does not have a key. The VF cable connector connects regardless of its orientation.

LBUS Connector (LEMO 4pin)

Use the two LBUS connectors to connect daisy chainable LBUS devices of the ECS Electronic Control System (lens motors, ARRI Master Grips, ARRI OCU-1, RIA-1...) to the camera. It supplies regulated 24.0 V DC with a maximum current of 4.0 A.

NOTICE

Do not connect both LBUS ports (camera body and lens mount) in one daisy chain. You possibly experience problems like camera shut down.

Camera Left

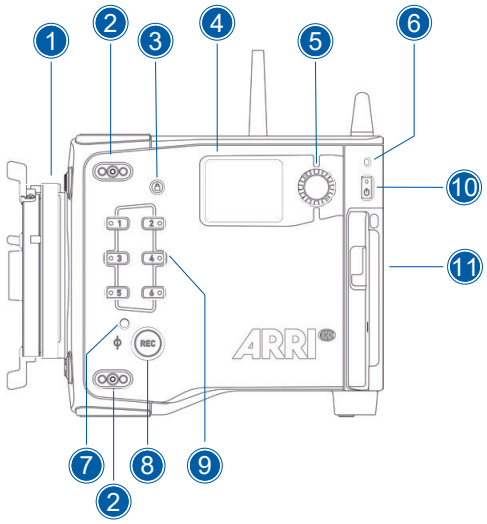

1 Lens Mount (here: LPL Mount)
2 Mounting Points for Accessories
3 LOCK Button
4 Side Display
5 Side Display Jog Wheel
6 Rear Camera Status LED
7 Left Camera Status LED
8 REC Button
9 User Buttons 1 - 6
10 POWER Button
11 Camera Identification Label

REC Button, LOCK Button & User Buttons 1-6

Use the *REC* button (8) to start and stop recording. Push and hold the *LOCK* button (3) to lock all camera buttons. Besides the *REC* and *LOCK* button, the camera left has six freely assignable user buttons (9). You can give each button an individual function. When a user button has a function, push the button to start its function. An LED on each user button reflects the functional status.

Camera Status LEDs

The camera status LEDs (6, 7) show the current camera condition:

Off	Idle. No recording media inserted or recording media full.
Green	Standby and ready to record
Orange	Prerecording
Red	Recording
Red / Green flashing	Error State

Side Display and Jogwheel

The side display (4) gives access to control basic camera parameters, recording media erase, and can show general information on the camera status. Use the jogwheel (5) to navigate through screens and change settings.

Camera Identification Label

The camera serial number label (11) is located on the left side of the camera adjacent to the media door. The serial number consists of the last 5 digits of the product number K1.0039373-XXXXX.

Camera Right

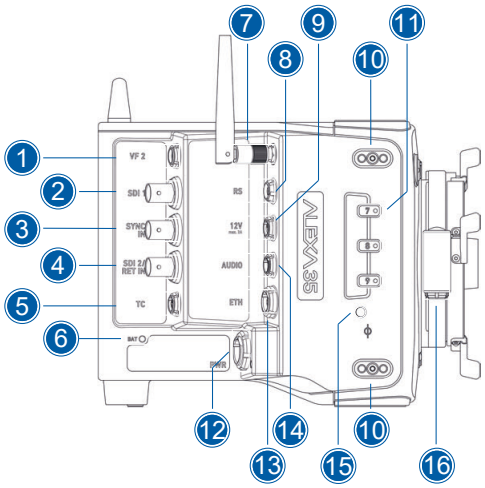

1 VF 2 Viewfinder Connector
2 SDI 1 Connector
3 SYNC IN-Anschluss
4 SDI 2 / RET IN Connector
5 TC- (Timecode) Connector
6 BAT LED
7 ECS White Radio Antenna Connector
8 RS Connector
9 12 V Connector
10 Mounting Points for Accessories
11 User Buttons 7-9
12 PWR Connector
13 ETH Connector
14 AUDIO Connector
15 Right Camera Status LED
16 LBUS Connector (for Lens Mount)

VF 2 Viewfinder Connector (CoaXPress)

VF 2 (1) is the second viewfinder port. The camera use an industrial CoaXPress interface with a custom ARRI connector to connect the MVF-2 viewfinder and the Camera Control Monitor CCM-1 to the camera. The interface transmits power, video, and control data. It supports cable lengths of up to 10 m (33 ft). The VF connector does not have a key. The VF cable connector connects regardless of its orientation.

SDI 1 & SDI 2 / RET IN (BNC)

You can configure both SDI BNC connectors (2, 4) to output the following video signals:

422 1.5G HD	(23.976, 24, 25, 29.97 and 30 fps progressive or psf) according to SMPTE ST 292-1:2012
422 3G HD	(48, 50, 59.94 and 60 fps progressive) according to SMPTE ST 425-1:2014
444 3G HD	(23.976, 24, 25, 29.97 and 30 fps progressive) according to SMPTE ST 425-1:2014
422 6G UHD	(23.976, 24, 25, 29.97 and 30 fps progressive) according to SMPTE ST 2081-10:2015
422 12G UHD	(48, 50, 59.94 and 60 fps progressive) according to SMPTE ST 2082-10:2015
444 12G UHD	(23.976, 24, 25, 29.97 and 30 fps progressive) according to SMPTE ST 2082-10:2015

You can configure the SDI 2 / RET IN connector (4) in the camera menu to function either as SDI output or as a Return In input. It accepts 1.5G and 3G SDI signals.

SYNC IN (BNC)

The SYNC IN connector (3) is a BNC connector for input of reference signals. It accepts analog black burst signals and tri-level HD signals for camera synchronization.

TC (LEMO 5pin)

The TC connector (5) accepts and outputs LTC (Longitudinal Timecode) signals.

White Radio Antenna Connector (RP-SMA socket)

The white radio antenna connector (7) accepts antennas with a RP-SMA plug. White radio is used for wireless lens control, lens data communication, and remote control of camera functions with the hand units of the ARRI Electronic Control System.

RS (Fischer 3pin)

The RS connector (8) supplies regulated 24 V DC accessory power. It can supply external devices with a maximum load of 72 W (24.0 V / 3.0 A). Additionally, the RS connector supplies a shutter pulse signal. You can use it to send a remote start / stop signal to the camera.

12V (LEMO 2pin)

The LEMO 2pin connector (9) supplies regulated 12 V DC accessory power. It can supply external devices with a maximum load of 24 W (12.0 V / 2.0 A).

PWR (LEMO 8pin)

The PWR connector (12) is the main power input for the ARRI ALEXA 35. It accepts an input voltage range from 20.5 V to 33.6 V DC. You can use the power cables KC50-S (K2.75007.0) or KC50-SP-S (K2.0001275) to supply the camera from an external source.

ETH (LEMO 10pin)

Use the ETH Ethernet connector (13) for camera remote control, metadata streaming, and service purposes. It supplies regulated 24 V DC with a maximum current of 0.5 A. Use the ARRI ALEXA Ethernet Cable KC 153-S (K2.72021.0) to connect the camera to a standard RJ-45 Ethernet port.

AUDIO (LEMO 6pin)

The AUDIO connector (14) is a 2-channel +24 dBu line level audio input with an additional regulated 12 V DC power output with a maximum current of 0.5 A. Use the ARRI ALEXA Mini LF Audio connector with cable (K2.0023988) to connect audio sources.

PWR and BAT Status LEDs

The BAT LED (15) indicates the status of the power source connected to the BAT interface on the rear of the camera. Onboard batteries use the BAT interface.

The PWR LED indicates the status of the power source connected to the PWR connector (12).

User Buttons 7-9

The camera right has three freely assignable user buttons (11). You can give each button an individual function. When a user button has a function, push the button to start its function. An LED on each user button reflects the functional status.

LBUS Connector (LEMO 4pin)

Use the LBUS connector (16) to connect daisy chainable LBUS devices of the ECS Electronic Control System (lens motors, ARRI Master Grips, ARRI OCU-1, RIA-1...) to the camera. It supplies regulated 24.0 V DC with a maximum current of 4.0 A.

Camera Rear

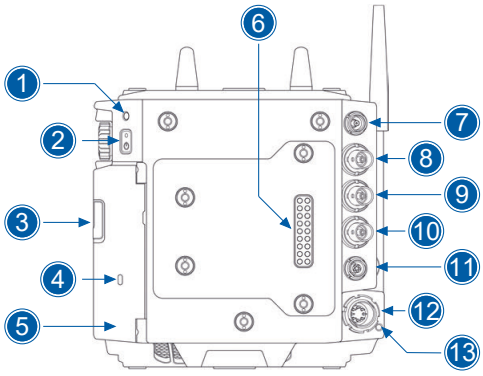

1 Rear Camera Status LED
2 POWER Button
3 Media Door Release
4 Media LED Window
5 Media Door
6 Camera Rear Interface
7 VF 2 Viewfinder Connector
8 SDI 1 Connector
9 SYNC IN Connector
10 SDI 2 / RET IN Connector
11 TC (Timecode) Connector
12 PWR Connector
13 PWR Status LED

POWER Button

Push the *POWER* button (2) to energize the camera. Push and hold the *POWER* button (2) to de-energize the camera.

Camera Rear Interface

Use the camera rear interface (6) to connect battery adapter plates and electronic accessories like the Power Distribution Module PDM-1 or the Audio Extension Module AEM-1. It supplies power, receives, and transmits audio signals, time code and serial data. The power supply to the rear interface pins is interrupted when no adapter or module is connected.

Camera Top

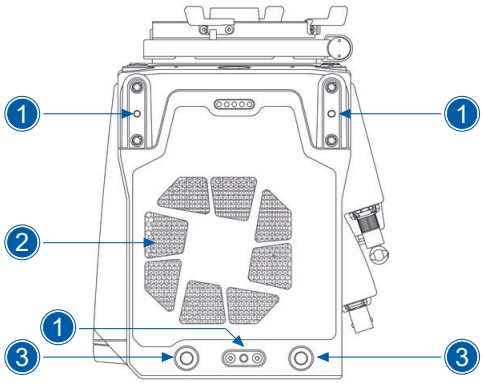

1 Top Attachment Points
2 Fan Outlet
3 WiFi Antenna Connector

WiFi Antenna Connectors (RP-SMA)

The camera has a 2.4 GHz WiFi module and two WiFi antenna connectors (3). They are on the top rear side of the camera.

Camera Bottom

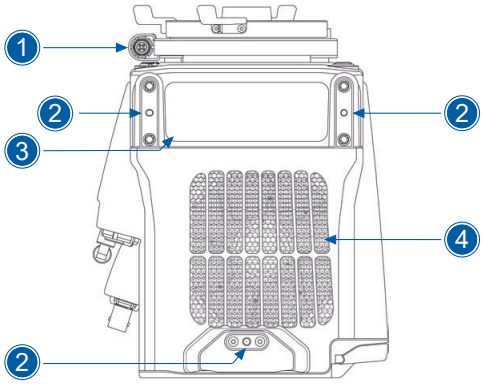

1 LBUS Connector (on Lens Mount)
2 Bottom Attachment Points
3 Conformity Label
4 Fan Intake

Camera Media Bay

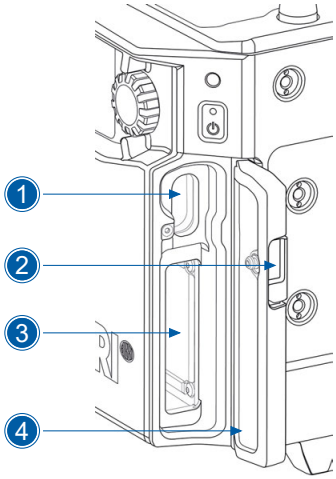

1 USB-C Connector
2 Media Door Release
3 Recording Media Slot
4 Media Door

Recording Media Slot

The camera uses a Codex Compact Drive to record data. The media bay on the camera left side has a recording media slot for the Codex Compact Drive. A small window in the media bay door shows the status LED of the Codex Compact Drive. To access the recording media slot, move the media door release (4) towards the camera bottom so that the spring-loaded media door opens.

USB-C Connector

The camera saves data like user setups, frame grabs and log files to a USB-C medium which is formatted with the exFAT file system. The camera loads software updates, additional frame lines and ARRI look files from the USB-C medium. You can use the USB-C connector (1) to charge USB devices. It supplies 5.0 V DC with a maximum current of 1.5 A.

3 Multi Viewfinder MVF-2 Overview

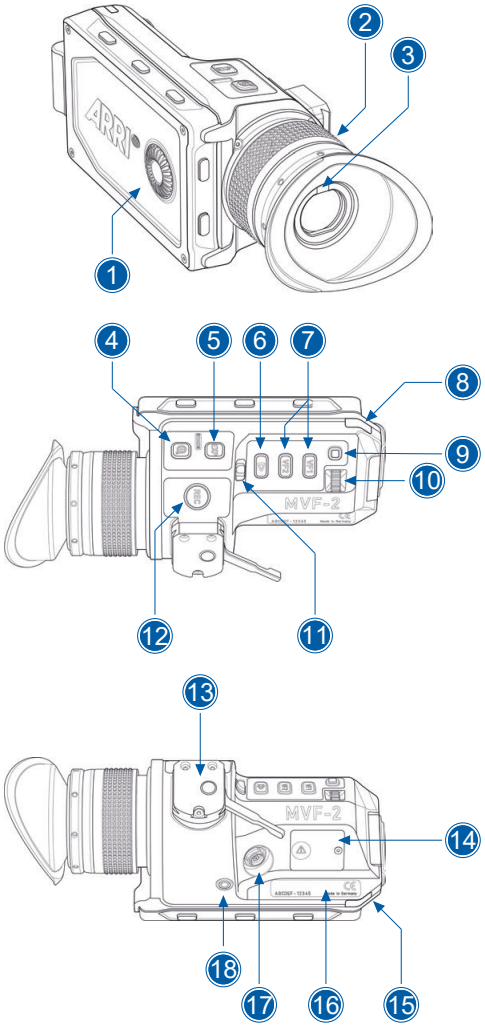

1 Flip-out Monitor
2 Diopter Adjustment
3 Proximity Sensor
4 ZOOM Button
5 EXP Button
6 PLAY Button
7 VF 1 & 2 User Buttons
8 Top Tally Light
9 SET Button
10 User Wheel
11 LOCK Switch
12 REC Button
13 Dove Tail
14 Service Cover
15 Bottom Tally Light
16 Product Label
17 Viewfinder Connector
18 Headphones Out

EVF OLED Display

The MVF-2 has a high contrast, temperature controlled 1920 x 1080 OLED display.

Diopter Adjustment

Energize the camera and look through the viewfinder. Twist the diopter adjustment ring (2) left or right to adapt the viewfinder image to your visual acuity. With the help of the scale labeled from 1 to 9 you can easily remember your adjustment when different persons use the viewfinder. The diopter adjustment can compensate from -5 to +5 diopters.

Proximity Sensor

The infrared proximity sensor (3) automatically de-activates the internal OLED display of the MVF-2 when you remove your eye from the viewfinder to prevent burn-ins on the display. It activates the display again as soon as you go near the eyepiece. Do not permanently cover the sensor as this might cause irreversible burn-in on the OLED display.

NOTICE

Permanent Activation of the Viewfinder OLED Display

Permanent activation can cause irreversible burn-ins on the viewfinder OLED display.

- Do not cover the viewfinder proximity sensor. When covered, the viewfinder OLED display will be active permanently.
- De-activate the viewfinder OLED display using the EVF power setting before you cover the viewfinder.
- Attach the viewfinder to the viewfinder bracket to ensure proper cooling in hot environments.
- Use the EVF power setting to de-activate the viewfinder OLED display before you use the viewfinder as a remote control without standing support.

Built-in Eyepiece Heater

The MVF-2 has a built-in eyepiece heater to prevent fogging of the eyepiece when you shoot in cold environments. You can activate the eyepiece heater in the camera menu. The heater is activated, when the eyepiece has a temperature of 15 °C (59 °F) or below. In very cold environments please use the Heated Eyecup HE-7.

EXP Button

The *EXP* button (5) activates and de-activates the False Color exposure tool (either false color or zebra) for the EVF and the flip-out monitor.

ZOOM Button

Push the *ZOOM* button (4) to activate the zoom feature on EVF and the flip-out monitor for a temporary zoom-in to quickly check focus. The magnification ratio is 1:1, or one sensor photosite to one display pixel.

PLAY Button

Push and hold the *PLAY* button (6) for two seconds to start in-camera playback from the recording media.

VF 1 and VF 2 User Buttons

The MVF-2 has two user buttons, *VF1* and *VF2* (7). You can give a frequently used function to each button.

SET Button and User Wheel

The *SET* button (9) and the user wheel (10) have the same functionality as the jog wheel on the flip-out monitor (see next section). You can use it for menu navigation and adjustment when the flip-out monitor is used with the display visible in the folded-in position.

LOCK Switch

The *LOCK* switch (11) locks the touchscreen and all MVF-2 buttons. A lock icon is shown on the HOME screen and in the Status Info of the EVF.

REC Button

The *REC* button (12) starts and stops recording to the recording media. The *REC* button is de-activated when no recording media is inserted.

Product Label

The product label (16) shows the MVF-2 serial number. The serial number consists of the last 5 digits of the product number K1.0024074 - XXXXX.

Viewfinder Connector (CoaXPress)

The ARRI ALEXA 35 uses an industrial CoaXPress interface with a custom ARRI connector to connect the MVF-2 viewfinder and the Camera Control Monitor CCM-1 with the camera. The interface supplies power, video, and control data. It supports cable lengths of up to 10 m (33 ft). The VF connector (17) does not have a key. The VF cable connector connects regardless of its orientation. It supports hot plugging of the viewfinder.

Headphones Out

The headphones out connector (18) is a 3.5 mm TRS connector (headphone jack). It outputs all four audio channels with a maximum power of 2.5 dBm.

Flip-Out Touchscreen Monitor

The 4" flip-out touchscreen monitor with up and down tilt function shows the camera's live image or the main user interface (HOME screen and camera menu).

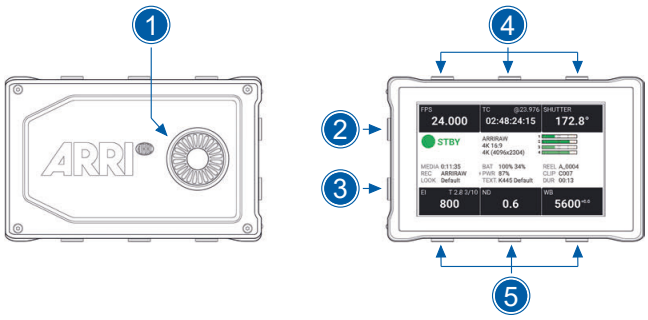

1	Jog Wheel	**3**	MENU / BACK Button	**5**	Lower Screen Buttons
2	HOME / LIVE Button	**4**	Upper Screen Buttons		

Jog Wheel

The jog wheel (1) is used to

- scroll or navigate through lists and menus,
- change values (by scrolling up or down), and
- access and confirm settings (push the jog wheel)

HOME / LIVE Button

Push the *HOME / LIVE* button (2) to toggle between the HOME screen (shown in the figure above) or the camera live view.

MENU / BACK Button

Push the *MENU / BACK* button (3) in the HOME screen or in camera live view to open the camera menu. While in the camera menu, it serves as a *BACK* button.

Screen Buttons

The MVF-2 flip-out monitor has six screen buttons, three above (4) and three below (5) the screen. Their function depends on the screen content. The function is labeled directly below or above each button. Buttons with no label do not have a function for that screen. A grayed-out label indicates that the function is currently not available.

To Adjust the Flip-Out Monitor

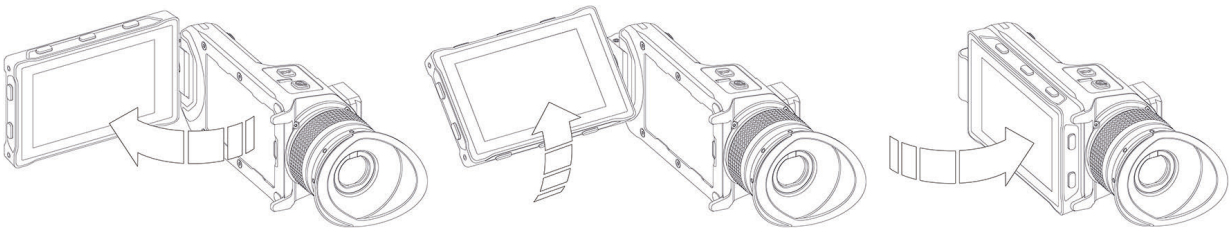

Fold out, swivel and fold in the monitor to put the display visible in the folded-in position. The image on the monitor automatically adjusts its orientation or can be set to the desired orientation in the camera menu.

Viewfinder Cables

MVF-2 viewfinder cables are available in the following lengths:

ID No.	Length	Description
K2.0042857	0.5m (1.5 ft)	Standard cable with right angle connector
K2.0023944	2.0 m (6.5 ft)	The medium length for remote use (straight connector)
K2.0023945	10.0 m (33 ft)	The longest possible length for remote use (straight connector)

NOTICE

The camera is equipped with two viewfinder ports. Do not operate two viewfinders in parallel. When you connect two viewfinders to the camera, the second connected viewfinder only shows a boot screen. It does not become active.

4 Camera Control Monitor CCM-1 Overview

The Camera Control Monitor CCM-1 is a 7" on board monitor. It provides full camera control and menu access for the ARRI ALEXA 35.

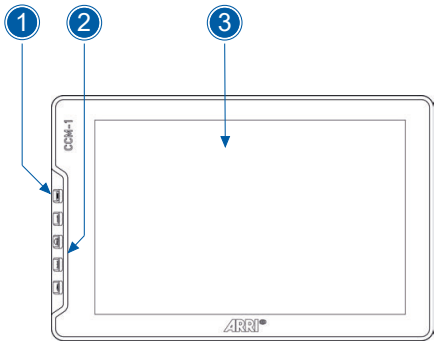

1 MENU Button
2 User Buttons
3 Display

Display

The display (3) is a 7" 1920x1200 IPS LCD touchscreen. It has a maximum screen luminance of 1300 nits and an active screen size of 95 x 142 mm / 3.72" x 5.95".

MENU Button and User Buttons

The *MENU* button (1) gives access to the camera menu. The MVF-2 has the same menu. You can give the four user buttons (2) camera-specific functions or smallHD monitor functions.

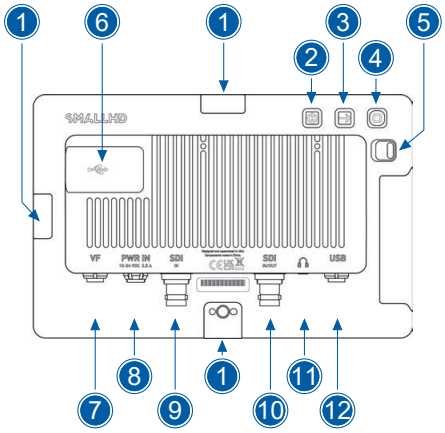

1 Mounting points
2 POWER Button
3 BACK Button
4 Joystick
5 LOCK Slider
6 USB-C Slot
7 VF Connector
8 PWER In Connector
9 SDI In Connector
10 SDI In / Out Connector
11 Headphones Connector
12 USB Connector

Mounting Points

The monitor has four ARRI Pin-Lock 1/4" mounting points (1) at the top, right, bottom, and rear side to attach the monitor to the camera or a rig.

POWER Button

The *POWER* button (2) energizes and de-energizes the monitor.

Joystick and BACK Button

Navigate the menu with the joystick (4) and the *BACK* button (3). They are an alternative control option in environments where the touchscreen is difficult to use.

LOCK Slider

The *LOCK* Slider (5) locks all monitor controls including the touchscreen to prevent unintended triggering of functions.

USB-C Slot

The USB-C slot (6) accepts the same USB-C medium as the ARRI ALEXA 35. It can stay in the USB-C slot under a weatherproof cover during operation. You can import firmware updates, and frame grabs, or store 3D-LUTs with the USB-C medium.

VF Connector (CoaXPress)

The VF connector (7) connects the CCM-1 to the camera. The interface supplies power, video, and control data. It supports cable lengths of up to 10 m (33 ft). If the CCM-1 is operated at a brightness of 100 nits, it can be powered through this interface only. If higher brightness levels are required, the monitor shall additionally be powered through the PWR In connector. The VF connector does not have a key. The VF cable connector connects regardless of its orientation.

PWR In Connector (Fischer 3pin)

You can supply additional power through the PWR In connector (8) to the monitor. This is required if the monitor is operated with a brightness above 100 nits, or when the monitor is used on third party cameras. The PWR In connector accepts input voltages from 10 – 34 V DC.

SDI In (BNC)

When the MVF-2 and CCM-1 are used with an ARRI ALEXA Mini LF or a third party camera, the CCM-1 receives the camera image through the SDI In connector (9). The SDI In connector accepts 1.5G and 3G SDI signals according to SMPTE ST 292-1:2012 and SMPTE ST 425-1:2014.

SDI In / Out (BNC)

As an input, the SDI In / Out connector (10) offers the same features as the SDI In input. You can use both inputs in parallel. As an output, it outputs the signal that is present at the SDI In connector.

Headphones Out

The headphone output (11) is a 3.5 mm jack that outputs all audio channels (same as the headphone output of the MVF-2).

USB Connector (LEMO 5pin)

When MVF-2 and CCM-1 are used in parallel on an ARRI ALEXA Mini LF, the CCM-1 can control the camera through the USB connector (12) instead of the VF connector.

5 Power Supply

CAUTION

In an emergency, you shall be able to quickly de-energize the camera. You shall have easy access to the PWR connector any time.

- Hold the connector and not the cable to disconnect the power cable.
- Do not use a power cable longer than 4 m (13 ft).
- Use only a specified power source to operate the system.
- Do not supply power above or beyond the specified voltage range.

Power Inputs

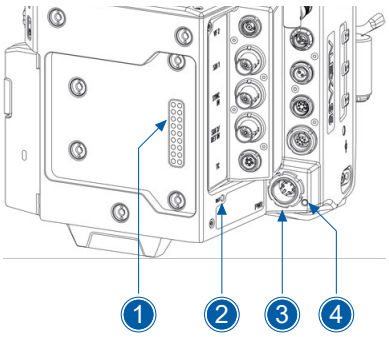

1 BAT Input
2 BAT Input Status LED
3 PWR Input
4 PWR Input Status LED

The camera accepts input voltages from 20.5 to 33.6 V DC. The BAT input is on the rear interface (1). You can power the camera from 24 V DC onboard batteries with a battery adapter.

Use the LEMO 8pin PWR input (3) to power the camera from block batteries or DC power sources with the cables KC50-S (K2.75007.0) or KC50-SP-S (K2.0001275).

Both power inputs have an LED (2, 4) that indicates the status of the input.

Energize and De-Energize

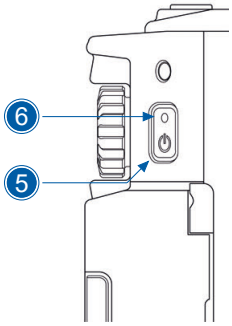

The backlit *POWER* button (5) is at the rear left of the camera. It is illuminated when the supplied power is in the correct range.

While the camera is booting up, the boot status LED (6) is flashing blue. As soon as the camera has finished the boot process, the boot status LED turns to solid blue.

➤ To energize the camera, push the *POWER* button (5).

➤ To de-energize the camera, push, and hold the *POWER* button (5) until the camera is de-energized.

Status Information

The status of the power inputs is shown on the HOME screen of the MVF-2, the side display and in the Status Info.

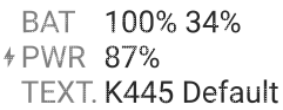

When you supply power through the PWR and BAT input at the same time, a current symbol on the HOME screen indicates which input is being used. You can set the preferred input in the camera menu.

The BAT entry can show two values when two B-mount batteries are used together (e.g. a hot swap unit and a main unit). The first value refers to the battery that sits directly on the battery adapter (usually the hot swap unit). The second value refers to the stacked battery. The camera will always draw power from the stacked battery first.

Green: Active Input	Solid	Sufficient power
	Blinking	Warning, power low
Blue: Standby Input	Solid	Sufficient power
	Blinking	Warning, power low
White: Camera off	Solid	Sufficient Power
	Blinking	Warning, power low
Red	Blinking	Insufficient Power

Additionally, you can read the battery status directly from the camera body through the two status LEDs (2, 4). The LEDs indicate which input is in use and if sufficient power is available. A green LED indicates that the input is in use, a blue LED indicates that there is power at the input, but it is not in use. The power low warning is issued when the supply voltage is lower than 22.0 V DC.

Power Outputs

The main accessory outputs of the camera are the RS output and the 12 V DC output. In addition, you can power applicable accessories through the LBUS sockets, the ETH socket, the SERIAL socket, or the AUDIO socket. The optional Power Distribution Module PDM-1 adds seven additional DC power outputs (4x 24 V, 2x 12 V, 1x 12 V Twist D-Tap) to the camera.

24 V DC Outputs

RS	(3.0 A max.)
LBUS	(4.0 A max.)
ETH	(0.5 A max.)
24 V (PDM-1)	(4.0 A max.)

The total available power over all 24 V DC outputs is just below 100 W to be compliant with DIN EN 62368 PS2, with a max. current of 4.0 A.

12 V DC Outputs

12 V	(2.0 A max.)
AUDIO	(0.5 A max.)
SERIAL	(0.2 A max.)
D-TAP (PDM-1	(2.0 A max.)

The total available power over all 12 V DC outputs is 50 W, with a max. current of 2.0 A.

Power Consumption

The ARRI ALEXA 35 draws between 85 W and 135 W while recording. The power draw is depending on the set recording resolution and sensor frame rate (with MVF-2 connected, but no further accessories attached).

The camera will switch off at 19.5V DC supply voltage.

Input Priority

When both power inputs are used, you can set the input which is to be used preferentially.

➢ Select *MENU* > *System* > *Power* > *Priority* to set the power input priority.

Available options:

Power In (PWR)	Always use the PWR input when power is available on BAT and PWR.
Onboard Battery (BAT)	Always use the BAT input when power is available on BAT and PWR.
Highest Voltage	Use the input supplying the higher voltage.

Power Warning

For each power input, you can set a threshold to trigger a battery warning. When the threshold is reached, the battery values on the HOME screen and in the Status Info blink orange.

➢ Select *MENU* > *System* > *Power* > *Power In (PWR) Warning (%)* to set the warning threshold (%) for the PWR input.

➢ Select *MENU* > *System* > *Power* > *Power In (PWR) Warning (V)* to set the warning threshold (Volts) for the PWR input.

➢ Select *MENU* > *System* > *Power* > *Onboard Battery (BAT) Warning (%)* to set the warning threshold (%) for the BAT input.

➢ Select *MENU* > *System* > *Power* > *Onboard Battery (BAT) Warning (V)* to set the warning threshold (Volts) for the BAT input.

NOTICE

When you use two B-Mount batteries at the same time, the BAT warning will not be issued until both batteries have reached the warning threshold.

BAT Unit Preference

The status of the power inputs can be shown in Volt or as a percentage of total battery capacity.

➤ Select *MENU* > *System* > *Power* > *BAT Unit Preference* to set the preferred unit between Volt and Percent.

NOTICE

Percentage can only be shown if supported by the power source.

PWR/BAT LEDs

When you do not need the status information through the two power LEDs, you can de-activate both LEDs.

➤ Select *MENU* > *System* > *Power* > *Enable PWR/BAT LEDs* to activate / de-activate PWR/BAT LEDs.

BAT Auto Boot Up

When the camera was de-energized due to a power cut, it automatically boots up as soon as power is present again. This behavior is optional for the BAT input, e.g. to prevent power cycling with discharged batteries.

➤ Select *MENU* > *System* > *Power* > *BAT Auto Boot Up* to activate / de-activate automatic boot up for the BAT input.

6 Menu Operation

The camera settings are organized in 12 submenus:

Recording	Multicam	Metadata
Media	System	Lens & ECS
Monitoring	Setup	Info
Image	User Buttons	Alerts

The Multicam submenu is available only when the camera is connected to a complete Multicam system.

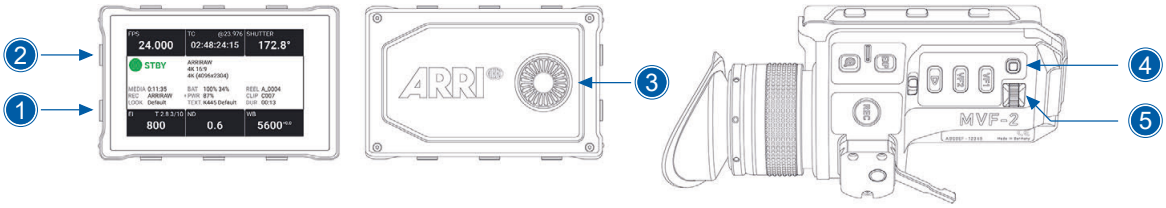

1	MENU / BACK Button	**3**	Jog Wheel	**5**	User Wheel
2	HOME / LIVE Button	**4**	SET Button		

➢ While the HOME screen is shown, push the *HOME / LIVE* button (2) or swipe to the right to show the live view.

➢ While the HOME screen is shown, push the *MENU / BACK* button (1) or swipe to the left to access the camera menu.

➢ Turn the jog wheel (3) or the user wheel (5) to scroll up or down to select a menu entry:

- Entries with a “>” at the end navigate to a sub menu. To navigate to a sub menu, push the jog wheel center or the *SET* button (4). To return to a higher menu level, push the *MENU / BACK* button (1).
- You can edit entries with a value directly. To edit a value, push the jog wheel center or the *SET* button (4), then turn the jog wheel or user wheel to select the value. Push the jog wheel center or *SET* button (4) to confirm the change or push the *HOME / LIVE* button (2) to abort and exit.
- You can activate and de-activate entries with a check box. Push the jog wheel center or the *SET* button (4) to activate or de-activate a setting.
- To leave the menu push the *HOME / LIVE* button (2) or swipe to the right.
- The jog wheel and the user wheel + *SET* button (4) have the same functionality.
- For the remainder of this manual, whenever the term “jog wheel” is used, it refers to the jog wheel and the user wheel. Whenever “push the jog wheel” is used, it refers to the jog wheel center and the *SET* button (4).

6.1 HOME Screen

The HOME screen shows the most important camera settings and gives quick access to change them through the screen buttons.

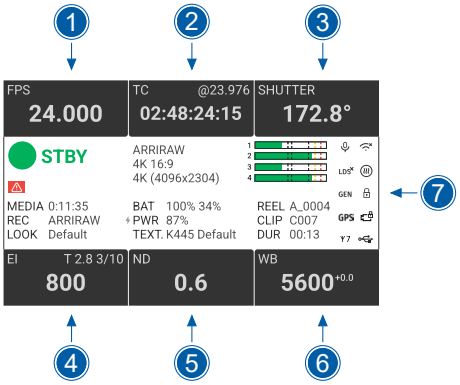

1 FPS Sensor Frame Rate Settings
2 TC Timecode Settings
3 SHUTTER Settings
4 EI Exposure Index Settings
5 ND Filter Settings
6 WB White Balance Settings
7 Status Section

FPS (Sensor Frame Rate)

The FPS label shows the current sensor frame rate in frames per second. Push the *FPS* screen button to adjust the sensor frame rate. The FPS label turns orange if the sensor frame rate does not match the project frame rate.

TC (Timecode)

The TC label shows the current timecode value and project rate. Push the *TC* screen button to access the timecode settings. The TC label turns orange if a timecode misconfiguration exists. Push the *TC* screen button for more information.

SHUTTER

The SHUTTER label shows the current shutter angle or exposure time. Push the *SHUTTER* screen button to set the shutter of the sensor. The shutter unit can be set to show either shutter angle (1.0° to 356.0°) or exposure time (1 sec to 1/8000 sec). The maximum shutter angle is limited by the resulting exposure time (1 sec max.). Shutter angle and sensor frame rate determine exposure time of the sensor in seconds by the following equation: exposure time = shutter angle / (360 x FPS).

EI (Exposure Index)

Shows the current exposure index. Push the *EI* screen button to adjust the exposure index in a range from 160 to 6400 ASA without Enhanced Sensitivity Mode or 2560 to 6400 ASA with Enhanced Sensitivity Mode.

ND Filter

The ND label shows the current ND filter value of the built in FSND (Full Spectrum Neutral Density) filter stage. Push the *ND* screen button to change the ND filter.

WB (White Balance)

The WB label shows the current white balance and tint. Push the *WB* screen button to set the white balance. This is the color temperature of the light source that the camera is currently adjusted for. In addition to the red / blue correction of the white balance, the camera can also compensate for a green / magenta tint. This value, called CC (color compensation), is shown as an exponent of the WB value.

Positive values are marked with a “+” and negative values with a “-”.

You can adjust white balance from 2.000 to 11.000 Kelvin (here: 5.600 K) in steps of 10 K for red / blue correction. You can adjust color compensation for green / magenta tints in a range from -16.0 to +16.0.

Positive or negative CC color compensation values appear as an exponent of the WB value (here: +0.0).

Status Section

The status section on the home screen shows key data about recording, power supply, remaining media capacity and more:

Camera Status

STBY	Standby - ready for recording.
PREREC	Pre-recording.
REC	Recording.
PLAY	Camera is in playback mode.
ERASE	Medium erase in progress. Active erasing disables recording.
None	Idle, recording not possible (e.g. no media inserted, media is full).
ERROR	System error occurred. See *MENU* > *Alerts* for details.

Codec, Sensor Mode & Recording Resolution

ARRIRAW
4K 16:9
4K (4096x2304)

Currently set codec, sensor mode and recording resolution.

Audio Meters

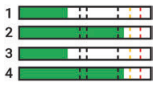

The audio meters show up when audio recording is active. When audio recording is de-activated, a crossed-out speaker icon is shown. Black markers indicate signal levels -20, -18, -9 dBFS. The yellow marker at -5 dBFS and the red marker at -2 dBFS indicate a signal close to clipping.

Clip Information

REEL A117
CLIP C003
DUR 01:46

Shows the current reel name, the current clip number, and the duration of the current clip (while recording) or of the last recorded clip (during standby).

Battery Status and Texture

BAT 100% 34%
PWR 87%
Text. Default

Shows the status of the power inputs and the active texture.

Media Capacity & Recording and Look Settings

MEDIA 0:11:35
REC ARRIRAW
LOOK Default

Shows the remaining capacity of the recording medium, the active recording processing (ARRIRAW or Log C LogC4) and the active look file.

Status Icons:

The microphone icon indicates that the internal microphones are active.

Internal microphones are de-activated (muted).

WiFi is active and in client mode. The camera is connected to a network.

WiFi is active and in client mode. The camera is not connected to a network.

WiFi is active and in host mode.

WiFi networks are set to Auto Join.

Touch Lock Icon. The touchscreen functionality of the MVF-2 flip-out monitor is de-activated.

The ARRI ECS White Radio is active and uses the shown channel number.

Camera Lock Icon. Camera buttons are locked.

MVF-2 Lock Icon. MVF-2 buttons and touchscreen are locked.

GEN The Genlock icon indicates that the camera is synchronized to a Genlock or timecode signal.

The icon turns orange when the source signal is missing or is not usable.

The Frame Grab icon indicates active frame grabbing. The icon turns orange if frame grabbing failed (e.g. no USB medium is inserted).

GPS GPS Status icon. Indicates the GPS status. A gray icon indicates valid GPS data. The icon turns orange when no or unsatisfactory GPS data is received.

CAL The CAL icon indicates that a lens motor calibration is required. The icon turns black when calibration is in progress and expires when calibration has finished.

The MVF-2 eyepiece heater is on. The icon turns gray when the heater is not heating (eyepiece temperature is > 15 °C (59 ° F)).

The USB icon indicates a connected USB medium. The icon turns gray when the USB medium is read only, and orange, if the USB medium is not usable.

The settings locked icon indicates that access to most menu settings has been restricted.

LDS Indicates that the LDS interface is not active.

The temperature icon indicates that the camera temperature is increased. The icon turns red when the camera temperature is out of range.

The fan icon indicates that the camera needs to increase the fan speed above 20 dB noise emission level. The icon turns orange when the fan speed exceeds 20 dB.

Indicates an active alert state. See *MENU > Alerts* for detailed information.

6.2 To Use Lists and to Import Files

For specified settings, the camera menu operates with preset lists that have a default content. You can adjust them to your preference. You can add values to and remove values from these lists. As a result, only project relevant values are shown. Value based lists contain entries that can be edited directly in the camera (e.g. Shutter and White Balance presets) while file-based lists contain files that are installed on the camera or were imported from the USB-C medium (e.g. Looks and Frame Lines).

Settings with value-based lists:

- *HOME > FPS*
- *HOME > SHUTTER*
- *HOME > WB*

Settings with file-based lists:

- *MENU > Image > Look > Look*
- *MENU > Image > Texture > Texture*
- *MENU > Monitoring > Frame Lines > Frame Line*
- *MENU > Setups > User Setups Installed*
- *MENU > Lens & ECS > Lens Data > Lens Tables Installed*

To Add Entries to Value based Lists

The camera offers two input methods to add entries to a list or change settings. Use the numeric keypad to enter a value directly. Use the slider to fine-tune a value, for example to fine-tune the shutter when filming monitors. This interface is used not only when you add values to a list, but also for most of the menu settings.

➢ Select e.g. *HOME* > *FPS* > *ADD*.

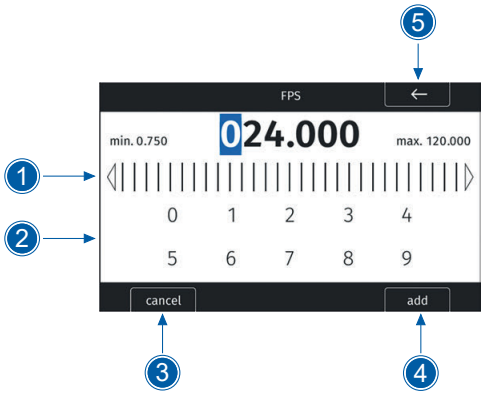

1 Touch Slider
2 Numeric Keypad
3 CANCEL Button
4 ADD Button
5 BACK Button

Operation through Jog Wheel

➢ Turn the jog wheel to change the value of the first digit. Then push the jog wheel to move to the next digit and adjust. The blue cursor indicates the selected digit.

➢ Push the *BACK* button (5) to reselect the previous digit.

➢ Push the *ADD* button (4) to add the new value to the list, or the *CANCEL* button (3) to abort and exit.

Operation through Touchscreen

➢ Use the touch slider (1) to change the value of the first digit. Then push the slider or the value to move to the next digit and adjust it. The blue cursor indicates the selected digit.

➢ Use the numeric keypad to enter a value directly.

➢ Push the *BACK* button (5) to reselect the previous digit.

➢ Push the *ADD* button (4) to add the new value to the list, or the *CANCEL* button (3) to abort and exit.

To Import Files

The camera offers the option to import files for looks, frame lines, user setups, and lens tables from a USB-C medium or from factory default presets.

To import files from a USB-C medium, the USB-C medium shall be prepared with a certain folder structure (see section "User Storage [▸ 31]" for more information). File names can be up to 64 characters in length, including the file extension. Files with a name longer than this limit will not be shown in the camera's file list. Special characters <, >, :, “, /,\, | and * in file names are not supported and replaced with a ”?“ in the camera menu.

➢ Select e.g. *MENU* > *Monitoring* > *Frame Lines* > *Frame Line* > *ADD*.

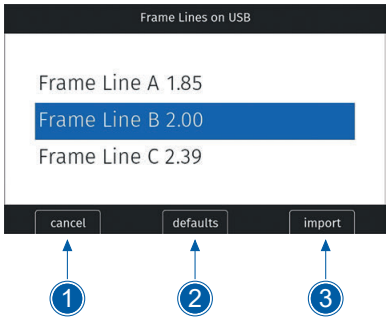

1 CANCEL Button
2 DEFAULTS Button
3 IMPORT Button

➢ Select a frame line file to import from the USB-C medium or select DEFAULTS (2) to select a frame line file from the factory defaults list.

➢ Push the *IMPORT* button (3) or the jog wheel to add the selected frame line to the frame lines list, or the *CANCEL* button (1) to abort and exit.

To Delete List Entries

➢ Select e.g. *HOME* > *FPS*.

➢ Scroll to the entry to be deleted.

➢ Push the *DELETE* button.

- The selected entry is marked for delete.

➢ Push the *DELETE* button again to delete the selected entry or turn the jog wheel to abort and exit.

Maximum Entries per List

All lists have a maximum number of entries they can hold. Whenever a list is full, the ADD button is grayed out and a message is shown. You need to delete entries from the list first to add new ones. The following table lists the maximum number of entries for each type of list:

List	FPS	Shutter	User Setups	White Balance	Looks, Textures	LDA	Frame Lines
Max. Entries	32	16	20	32	50	200	256

6.3 On-screen Keyboard

When working with textual parameters on the camera, an on-screen keyboard serves to enter text. You need to use the keyboard, for example, to enter the name when saving a user setup.

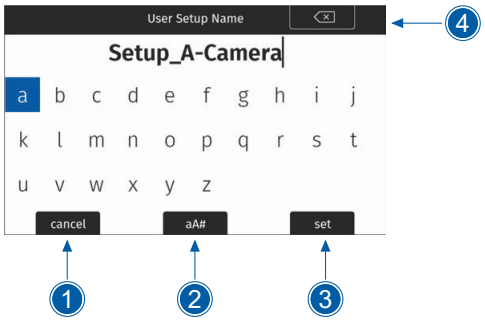

1 CANCEL Button
2 aA# Button
3 SET Button
4 CLEAR Button

➢ Use the jog wheel to select and enter characters.

➢ The *CLEAR* button (4) deletes the digit to the left of the cursor. Push and hold the *CLEAR* button (4) to clear the entire value.

➢ The *aA#* button (2) toggles between lower case, upper case, and numeric text entry.

➢ Push the *SET* button (3) to save the file, or the *CANCEL* button (1) to abort and exit.

6.4 Side Display

The side display of the camera gives access to the main parameters. This can be useful for applications where it is not necessary or possible to connect an MVF-2.

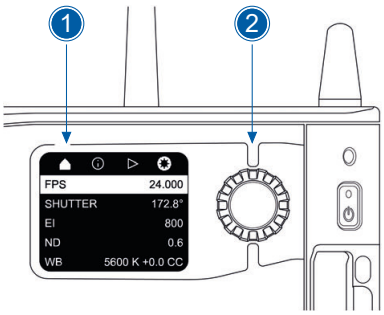

1 Home Page
2 Jog Wheel

The display has four pages. You can select and open a page with the navigation bar at the top of the screen:

- ⌂ The *Home Page* (1) offers to adjust the main parameters Sensor FPS, Shutter, Exposure Index, ND Filter, and White Balance.
- ⓘ The *Info Page* gives an overview about other important parameters like the remaining time of the recording medium or the current Look and Texture.
- ▷ The *Playback Page* offers a simple in-camera playback control.
- ⚙ The *Settings Page* offers to adjust settings for the side display and camera body and to erase the recording medium.

Menu Operation

➢ Turn the side display jog wheel (2) to scroll through the pages.

➢ Push the jog wheel to access a page.

➢ Turn the jog wheel to scroll up or down within the page.

➢ To edit a setting (Home Page and Settings Page), push the jog wheel, then turn to select the correct value. Push to confirm the change.

➢ To leave a page, scroll up into the navigation bar and push the jog wheel.

For playback control through the side display, please see section "Playback [▸ 72]".

Display Mode

➢ Select *SETTINGS* > *Display Mode*.

Available options:

On	The side display is always active.
Off	The side display is de-activated. Push and hold the jog wheel for 2 seconds to activate it. Alternatively, you can push and hold the jog wheel for 2 seconds to de-activate the side display.
Sleep	The side display de-activates 20 seconds after the last action. Push the jog wheel to activate the display.
ND	The side display de-activates 20 seconds after the last action. It shows the current ND Filter value. Push the jog wheel to activate the display.

6.5 User Storage

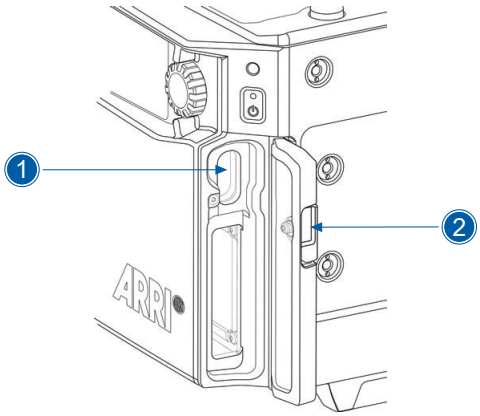

The camera saves data like user setups and frame grabs to a USB-C medium. You can load look files, frame lines and software updates into the camera from the USB-C medium.

The USB-C slot (1) is located behind the media door, above the recording media slot. Slide down the media door release (2) to open the media door.

The camera only supports an exFAT formatted USB-C medium using one partition in a Master Boot Record (MBR) partition table and a maximum capacity of 256 GB. The camera uses a special folder structure. You can prepare the folder structure with the camera.

To Prepare the Folder Structure

The camera can only load files from a correctly prepared USB-C medium with the required folder structure. Preparing the folder structure on the USB-C medium within the camera will not alter existing folders and files on the USB-C medium.

➢ Open the media door and insert the USB-C medium.

➢ Select *MENU* > *Media* > *Prepare USB Medium* to create the ALEXA 35 folder structure:

ARRI/ ALEXA35/	FRAMELINES	For frame line imports to camera
	GRABS	For stored frame grabs
	LDA	For lens table import / export
	LICENSES	For license file installation
	LOG	For exported camera logfiles
	LOOKFILES	For look file import / export
	SETUPS	For import / export of user setups
	SUP	For software update installation
	SENSOR	For import / export of User Pixel Mask files
	TEXTURES	For Texture import
ARRI/ECS		For LBUS device installation

The USB icon on the HOME screen and in the Status Info indicates a connected USB-C medium. A gray icon indicates that the USB-C medium is read only. An orange icon is shown if the USB-C medium is not supported.

6.6 Info Screens

The INFO screens give detailed information about the current state of the camera system.

➢ Select *MENU* > *Info*.

The Info sub menu contains the following lists:

Version Info

Software	The camera software version.
Revision	Revision of camera software version.
FPGA	Firmware version of active FPGA.
MVF-2 Software	Software version of MVF-2.
Lens Mount Software	Software version of lens mount.

System Info

Time + Date	Current system time and date of the camera.
Camera Serial No.	Serial number of the camera.
Operating Hours	Total operational time of the camera in hours:minutes.
Sensor Temperature	Current temperature of image sensor.
Sensor Temp. State	Rates the sensor temperature according to OK, warning, or error.
Camera Temp. State	Rates the camera temperature according to OK, warning, or error.

False Color Info

The False Color Info shows a reference chart explaining the color coding used for the False Color exposure tool.

PWR/BAT LED Info

The PWR/BAT LED Info shows a reference chart explaining the LED states of the PWR and the BAT LEDs.

Media Info

Status	Status of the recording medium.
Model	Name/model of the recording medium.
SN#	Serial number of the recording medium.
FW Version	Firmware version of the recording medium.
Size	Total storage size of the recording medium.
Clip Count	Number of clips on the recording medium.

USB Info

Status	Status of USB-C medium.
Storage Free/Total	Free and total available storage on USB-C medium in megabyte.
Frame Line Files	Number of frame line files on USB-C medium.
License Files	Number of license files on USB-C medium.
Look Files	Number of look files on USB-C medium.
Setup Files	Number of user setup files on USB-C medium.
SUP Files	Number of SUP (Software Update Package) files on USB-C medium.
LDA Files	Number of LDA (Lens Data Archive) files on USB-C medium.
Texture	Number of Texture files on USB-C medium.
	The number entries consist of two numbers, the number of files on the USB-C medium and the number of files recognizable by the camera.

Network Info

WiFi Network	Name of connected network (client mode).
WiFi IP	IP address of the camera via WiFi.
LAN IP	IP address of the camera via Ethernet.
Web Remote	URL address of camera remote control website.
Streaming Addressing	Type of addressing used for metadata streaming (Unicast / Multicast).
Streaming Address	IP address of the metadata streaming receiving device.
Streaming Port	Metadata streaming port.

Lens Info

Lens Type	Type of lens (LDS, Cooke, ENG, EF).
Model	Lens model name according to manufacturer.
Serial No.	Serial number of the lens.
Extender	Name of extender in use.
Filter/Diopter	Name of diopter / filter in use.
Focal Length	Focal length of lens in mm.
Focus	Current focus distance of lens.
Iris	Current iris value of lens.

User Button Info

The user button info screen lists the functions given to the user buttons of the camera body and the MVF-2.

Export HW Info File

HW (Hardware) Info files are required to generate licenses in the ARRI License Shop or may be requested by camera service to get detailed information on the camera's hardware and components revisions.

The HW Info file is exported to the USB-C medium in the ARRI/ALEXA35/LICENSES folder.

Export Logfiles

Logfiles help ARRI camera service to analyze potential problems. Normally, logfile export is not required.

“Export Logfiles” combines the camera logfiles, HW Info file, current user setup and other diagnostic files into a .zip archive. It stores the archive in the ARRI/ALEXA35/LOG folder on the USB-C medium. Privacy sensitive information such as WiFi password and look files are not exported.

7 Status Information and Overlays

The camera gives status information on the EVF and SDI outputs, with details presented at the top, bottom, and sides of the screen:

Top Status Bar: Shows key settings, including sensor FPS, shutter angle, exposure index, ND filter, and white balance.

Bottom Status Bar: Shows battery level, reel and clip information, camera status, remaining recording time, and timecode.

Side Icons: Positioned on the left and right edges, these icons offer additional insights into the status of the camera.

In addition, you can activate overlays like lens data and an electronic horizon for enhanced monitoring.

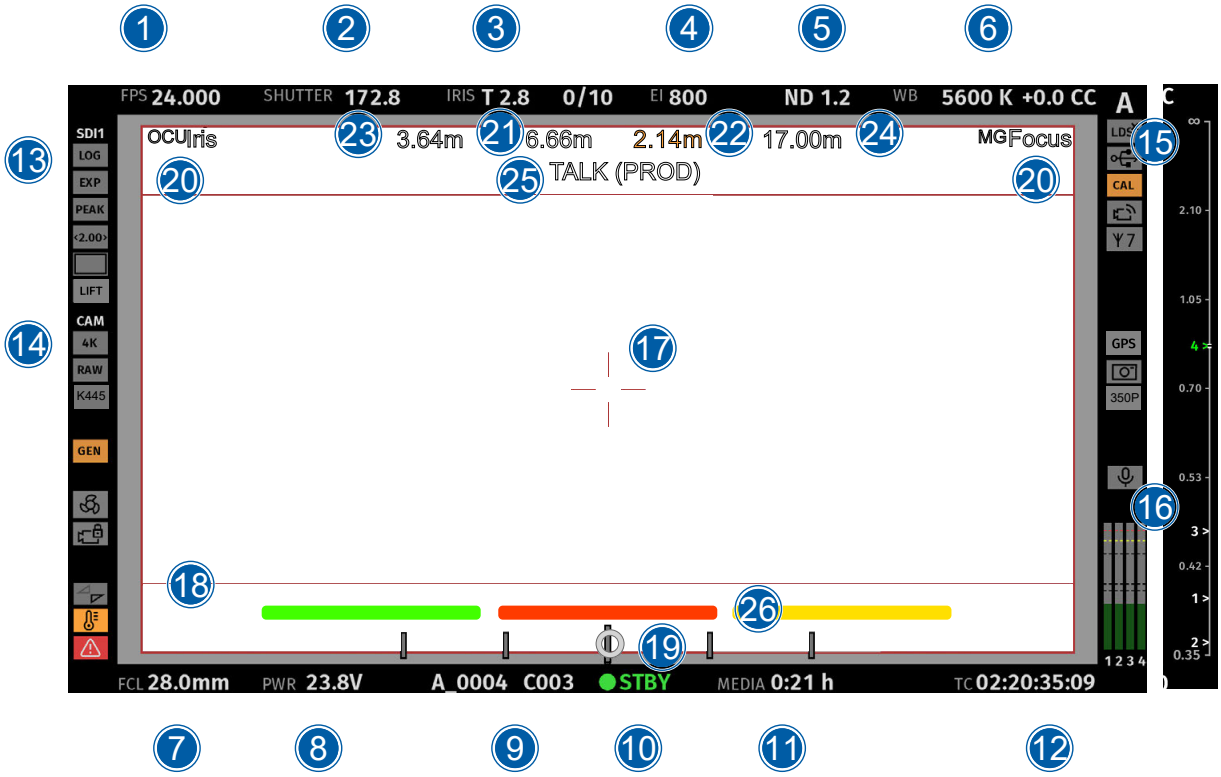

Status Info Top

1	Sensor frame rate. The FPS label turns orange if the sensor frame rate does not match the project rate.
2	Shutter setting (shutter angle or exposure time).
3	Lens iris, including fractions of a stop (if lens data is available). When using a lens extender, the iris value is shown in brackets (recalculated value).
4	Exposure index.
5	ND filter. The value is blinking while the filter changes.
6	White balance.

Status Info Bottom

7	Shows the focal length of the lens (if lens data is available). When using a lens extender, the focal length value is shown in brackets (recalculated value).
8	Shows the active power source (onboard battery (BAT) or power in (PWR)) and its supply level. If the level reaches the configured warning threshold, the value starts flashing orange.
9	Current reel and clip number.

10 Camera status:

STBY	Standby - ready for recording.
PREREC	Pre-recording.
REC	Recording.
PLAY	Camera is in playback mode.
ERASE	Medium erase in progress. Active erasing disables recording.
None	Idle, recording not possible (e.g. no media inserted, media is full).
ERROR	System error occurred. See *MENU* > *Alerts* for details.

11 Remaining capacity of the recording medium at current sensor frame rate and codec, in real time. When media capacity is less than two minutes, capacity values start flashing orange.

12 Current timecode. The TC label turns orange if the sensor frame rate does not match the project rate.

Status Info Left

13 **EVF / SDI 1 / SDI 2 Status**

LOG SDR HDR	EVF processing icon. Shows the current processing for the EVF output (LogC4, Look (SDR) or Look (HDR).
709 2020 HLG PQ WVO	SDI processing icon. Shows the current processing for the respective SDI output (REC 709, REC 2020, 2100 (HLG), 2100 (PQ) or Wireless Video Optimized (WVO)).
EXP	Exposure tool icon. Indicates that False Color is active on the respective output.
PEAK	Peaking Icon. Indicates that Peaking is active on the respective output.
‹2.00›	Anamorphic Desqueeze icon. Indicates that Anamorphic Desqueeze is active and which lens squeeze factor is applied.
	Magnification icons. Indicate that the output shows less image content than recorded.
LIFT	EVF Lifted Black Icon. Indicates that EVF Lifted Black is active.

14 **Camera Status**

4K UHD	Shows the current Recording Resolution (4.6K, 4K, UHD, 3.3K, 3K, 2K, HD) (4.5K, 4.3K, UHD...).
RAW ProR CORE	Shows the current recording processing (RAW for ARRIRAW, CORE for ARRICORE, or ProR for Apple ProRes).
K445	Shows the current Texture.
GEN GEN	Genlock icon. Indicates that the camera is synchronized to a Genlock or timecode signal. The icon turns orange when the sync signal is missing or is not usable.
	The fan icon indicates that the camera needs to increase the fan speed above 20 dB. The icon turns orange when the fan speed exceeds 20 dB.
	Camera lock Icon. Indicates that the camera body controls are locked.

	Mirror image icons. Indicate that mirroring is applied to the image (V, H, V+H).
	Temperature warning icon. Indicates that the camera temperature is increased.
	Alert Icon. Indicates an active alert state. Alerts require the user's immediate attention and persist until resolved. See *MENU > Alerts* for further information.

15 Status Info Right

	Indicates that the lens mount data interface has been de-activated manually (e.g when custom lens tables are used).
	USB icon. Indicates connected USB-C medium.
	Calibration icon. Indicates that lens motor calibration is required. The icon turns gray when calibration is in progress and expires when calibration has finished.
	WiFi Icon. Indicates that WiFi is active (host mode, client mode.) The client mode icon turns orange if the camera is not connected to a network.
	White Radio icon. Indicates that White Radio is active and shows the set channel number.
	GPS Status icon. Indicates the GPS status. A gray icon indicates valid GPS data. The icon turns orange when no or unsatisfactory GPS data is received.
	Frame Grab icon. Indicates frame grabbing. The icon turns orange if frame grabbing failed (e.g. no USB medium is inserted).
	Diopter icon. Indicates that a diopter (Ensō Vintage Element, Signature Impression V, Front Diopter) is in use, and which type it is.

16 Audio Section

	Internal microphone icons. Indicate that internal microphones are active.
	Internal microphone icon. Indicates that internal microphones are de-activated (muted).
	Audio meters. Indicate audio recording. Shows the current level of the audio channels. If audio recording is not possible (e.g. sensor fps 10 project frame rate), an orange speaker icon is shown instead of the meters.

Focus Scale

Instead of the status icons (15) and the audio meters (16), you can show a focus scale for focus marks.

The circular marker represents the current focus distance. The markers 1, 2, 3, and 4 indicate user-defined focus marks.

A focus mark is shown yellow, when the current focus distance falls in the depth of field range of that mark. The mark is shown green, when the current focus distance matches the mark position.

Continuous distance measurements from a distance measure device (e.g. a Focusbug Cine RT) are shown as a green triangle on the right side of the scale, consistent with the Hi-5 hand unit.

Static focus marks transmitted by the Cine RT system are shown in the same way as camera focus marks. The only difference is that the marker symbol (>) is shown in green instead of white.

See "Shared Focus Marks and Overlay [▶ 82]" for more information.

17 Center marker, marks the center of the image to help in framing.

18 Frame line (here: ARRI 2.39)

19 Electronic Horizon overlay. Can be set to show numeric roll and tilt values.

20 The Master Grips / OCU-1 Control overlay indicates which axis is controlled by connected Master Grips and OCU-1.
The overlay lights up white when there is control over the axis and gray when there is no control (e.g. no motor connected). The overlay flashes orange briefly when control of the axis is lost (e.g. through override from a hand unit).

21 The focus distance overlay shows the current focus distance (if lens data is available).

22 Distance measure overlay, shows readings from distance measurement devices connected to the SERIAL connector.

23 DoF overlay shows the calculated depth of field near focus distance (if lens data is available).

24 DoF overlay shows the calculated depth of field far focus distance (if lens data is available).

25 The intercom overlay (PROD or ENG) indicates that the intercom channel is open for speaking.

26 Tally overlay (red, green, or yellow).

To Apply Status Information on Monitoring Outputs

➤ Select *MENU* > *Monitoring* > *VF* > *EVF Overlays* > *Status Info* to apply status information for the EVF.

➤ Select *MENU* > *Monitoring* > *SDI* > *SDI 1 Processing* > *Overlays* > *Status Info* to apply status information for the SDI 1 output.

➤ Select *MENU* > *Monitoring* > *SDI* > *SDI 2 Processing* > *Overlays* > *Status Info* to apply status information for the SDI 2 output.

Available options:

Off	Status information is not shown.
Overlay	Status information is shown and overlaid on the captured image.
Safe	Status information is shown around the captured image.

User Buttons *VF Status Info*, *SDI 1 Status Info* and *SDI 2 Status Info* set the Status Info on the related output.

To Configure the Status info Components

➤ Select *MENU* > *Monitoring* > *VF* > *EVF Overlays* > *Status Components* to configure the status components for the EVF.

➤ Select *MENU* > *Monitoring* > *SDI* > *SDI 1 Processing* > *Overlays* > *Status Components* to configure the status components for the SDI 1 output.

➤ Select *MENU* > *Monitoring* > *SDI* > *SDI 2 Processing* > *Overlays* > *Status Components* to configure the status components for the SDI 2 output.

Available options:

Camera Index Letter	Shows the Camera Index Letter in the top right corner of the image (SDI only). Helps to identify camera image output when shooting with multiple cameras.
Electronic Horizon	Shows a horizon overlay (19) representing the roll and tilt of the camera measured by the camera's position sensor. This sensor can be ""reset [▶ 98]"" if it appears to have an offset.
Show Numeric Values	Sub-option of Electronic Horizon. Shows the tilt and roll of the camera in degrees as measured by the camera's position sensor.

Lens Data	Shows / hides iris (3) and focal length (7) overlays.
Lens Focus Distance	Shows / hides focus distance overlay (21).
Depth of Field	Shows / hides the depth of field overlays (23, 24).
Distance Measure	Shows / hides status overlay of distance readings from a distance measure device connected to the SERIAL connector (22).
Master Grips / OCU-1 Control	Shows / hides status overlay of Master Grips / OCU-1 axis control (20).
Info Left	Shows / hides the left section of the status info.
Info Right	Shows / hides the right section of the status info.
	Audio Shows / hides the audio levels (16).
	Focus Scale Shows / hides the focus marker scale.
Info Top	Shows / hides the top section of the status info.
Info Bottom	Shows / hides the bottom section of the status info.
Timecode	Shows / hides timecode (12).
Info 1	Shows / hides the left section of the status info.
Info 2	Shows / hides the right section of the status info.
Timecode	Shows / hides timecode.

To Adjust the Overlay Brightness

You can adjust the brightness of the status overlays.

➢ Select *MENU* > *Monitoring* > *VF* > *EVF Overlays* > *Overlay Brightness* to adjust the overlay brightness for the EVF.

➢ Select *MENU* > *Monitoring* > *SDI* > *SDI 1 Processing* > *Overlays* > *Overlay Brightness* to adjust the overlay brightness for the SDI 1 output.

➢ Select *MENU* > *Monitoring* > *SDI* > *SDI 2 Processing* > *Overlays* > *Overlay Brightness* to adjust the overlay brightness for the SDI 2 output.

➢ Set the overlay brightness in a range from *1* (the lowest brightness) to *4* (the highest brightness).

Flip-out Monitor Status Bar

The flip-out monitor of the MVF-2 shows a slightly different status information than the EVF and the SDI outputs. When set to show the camera live image, a status bar is shown below the image. The flip-out monitor status bar has five pages:

Lens Data *Recording* *Main Parameters* *Audio and Timecode* *Status Icons*

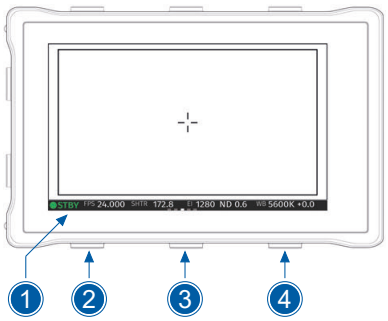

1 Status Bar
2 SCROLL Button
3 MAIN Button
4 SCROLL Button

Use the left and right *SCROLL* button (2, 4) to change the status bar (1) content. The *CENTER* button (3) returns to show the main parameters.

8 Main Parameters

8.1 Project Settings

The project settings menu contains settings that should be configured at the start of each project. The project settings are here: *MENU* > *Recording* > *Project Settings*.

Project Rate

The project rate selects the number of frames the timecode counts per second and selects the frame rate at which clips are played back.

A change of the project frame rate will automatically set the sensor frame rate and the SDI frame rates to the same value. You can set different frame rates. To do so, change the sensor frame rate or the SDI frame rates individually.

➤ Select *MENU* > *Recording* > *Project Settings* > *Project Rate*.

Available project frame rates:

Project Rate	Scan Format	Sensor Real-Time Recording
23.976p	Progressive	23.976 fps
24p	Progressive	24 fps
25p	Progressive	25 fps
29.97p	Progressive	29.97 fps
30p	Progressive	30 fps
48p	Progressive	48 fps
50p	Progressive	50 fps
59.94p	Progressive	59.94 fps
60p	Progressive	60 fps

Next Reel Count

The next reel count sets the reel number assigned to the next new recording medium. The camera automatically increments the reel number each time a new recording medium is inserted, erased, and recorded on.

If a previously used media is reloaded in the camera (comparable to a short end of a film roll), it will keep its reel number, and the camera increments the reel count. If the media is loaded in another camera, it keeps its name, but a new folder with the according camera ID and reel number is created in the root folder of the media. It is possible, but usually not necessary, to manually change the next reel number.

➤ Select *MENU* > *Recording* > *Project Settings* > *Next Reel Count*.

➤ Set the next reel count between *0001* and *9999*.

Camera Index

You can give each camera a unique two-character camera index to be able to identify the individual camera unit (A, B, C etc.) in clip and reel names. For additional information please see section "Clip Naming Scheme [▸ 68]".

➤ Select *MENU* > *Recording* > *Project Settings* > *Camera Index*.

Camera Index Color

Set the color of the camera index letter shown in the Status Info of the SDI outputs (e.g. to align it to the color coding of your cameras).

➤ Select *MENU* > *Monitoring* > *SDI* > *SDI 1 Processing* > *Overlays* > *Status Components* > *Camera Index Letter* to show the camera index letter in the SDI 1 Status Info.

➤ Select *MENU* > *Monitoring* > *SDI* > *SDI 2 Processing* > *Overlays* > *Status Components* > *Camera Index Letter* to show the camera index letter in the SDI 2 Status Info.

➤ Select *MENU* > *Recording* > *Project Settings* > *Camera Index Color* to set the camera index color.

Lens Squeeze Factor

The lens squeeze factor determines the factor that is used for anamorphic desqueeze on the monitoring outputs when using anamorphic lenses. This value is also written into the metadata of the clip and allows video players and editing software to automatically desqueeze clips that have been shot with anamorphic lenses. Frame lines will automatically scale to the selected lens squeeze factor. This is a licensed feature. See section "Licensing [▸ 100]" for more information.

➤ Select *MENU* > *Recording* > *Project Settings* > *Lens Squeeze Factor* and set the lens squeeze factor.

Available options:

1.00 *1.25* *1.30* *1.33* *1.50* *1.65* *1.80* *1.85* *2.00*

The set lens squeeze factor is indicated through the desqueeze icon shown in the Status Info (here: 2.00).

NOTICE

The availability of the lens squeeze factors depends on the selected sensor mode.

8.2 Sensor Frame Rate

The sensor frame rate defines how many frames the sensor captures per second. For synchronized sound recording, the sensor frame rate should be aligned with the project frame rate. Recording at a higher sensor frame rate than the project frame rate results in slow motion during playback. Conversely, recording at a lower sensor frame rate creates a time-lapse effect. The maximum achievable sensor frame rate depends on the selected sensor mode, the chosen recording codec, the Compact Drive model, and the applicable license. When the sensor frame rate differs from the project frame rate, the user interface highlights the FPS labels in orange to indicate an off-speed recording.

➤ Select *HOME* > *FPS* to set the sensor frame rate.

➤ Select a preset from the list or add a custom frame rate.

User Buttons *FPS Increase / Decrease* change between FPS presets.

User Button *FPS Preset* switches to a defined sensor frame rate.

8.3 Sensor Overdrive

ALEXA 35 Xtreme

Sensor Overdrive is a special operating mode that reduces the internal sensor readout time, allowing for significantly higher frame rates—up to 660 frames per second. To achieve this performance, the camera shortens both the sensor integration and readout times. This activates extreme high-speed recording but also introduces changes to image characteristics and exposure behavior.

Sensor Overdrive requires the High-Speed License and is only compatible with the ARRICORE recording codec. If ARRICORE is not already selected, the camera switches automatically to it when entering Sensor Overdrive. Activating the mode also requires the camera to reboot. The minimum frame rate in Sensor Overdrive is equal to the lowest maximum frame rate available in regular mode across all recording codecs for the selected sensor mode / recording resolution.

Please find a detailed overview in appendix "Maximum Frame Rates by Sensor Mode, Recording Resolution and Codec [▸ 140]".

Sensor Overdrive Settings

When you use Sensor Overdrive, the following settings define the supported operating range and ensure optimal performance:

- Recording Codec changes to ARRICORE.
- The shutter angle shall not exceed 340°.
- The supported Exposure Index (EI) range is EI 800 to EI 6400.
- Enhanced Sensitivity (ES) is not available in this mode.
- The camera operates with a dynamic range of approximately 11 stops due to the reduced sensor readout time.

To Activate and De-Activate Sensor Overdrive

➢ Select *HOME* > *FPS* > *Overdrive*

The camera activates Sensor Overdrive. If not already selected, the ARRICORE codec is activated, and the camera reboots automatically.

➢ Select *HOME* > *FPS* > *Exit Overdrive*

This returns the camera to regular mode. The previously selected recording codec is restored automatically. Frame rate, shutter angle, and exposure index may need to be adjusted manually.

NOTICE

Sensor Overdrive is not available in Sensor Mode 3.8K 2.39:1.

Exposure Recommendations

Due to the reduced dynamic range — particularly in the highlight region — you shall handle exposure with increased care in Sensor Overdrive. The narrower margin for error means both overexposure and underexposure can significantly impact image quality. Overexposure may lead to highlight clipping and artifacts, while underexposure may result in excessive noise.

To help preserve highlight detail and reduce the risk of clipping, we strongly recommended to shoot at EI 2560. This higher sensitivity improves highlight latitude, although it may introduce more image noise. Modern postproduction tools are generally better equipped to reduce noise than to recover clipped highlights.

When matching Sensor Overdrive footage with material shot in regular mode, or when shooting scenes with large, overexposed areas, you should use EI 2560 and additionally underexpose by one to two stops, then lift the exposure in postproduction. This approach helps maintain more usable highlight information.

Due to the tighter exposure tolerances in Sensor Overdrive, you should conduct test recordings beforehand to become familiar with the mode’s behavior and determine the optimal exposure strategy for the specific shooting scenario.

For additional details on how the Exposure Index applies when using Sensor Overdrive, please see section "Exposure Index [▸ 43]".

8.4 Shutter

You can adjust the electronic shutter of the camera from 1.1° - 358° shutter angle or 1 to 1/8000 seconds (depending on the set frame rate). You can set the preferred shutter unit.

➤ Select *MENU* > *System* > *Shutter Unit*.

Available options:

Shutter Angle	Converts exposure time into the angle of a virtual rotating mirror shutter as in film cameras. A fixed angle creates varying exposure times with varying frame rates.
Exposure Time	Shows the effective sensor exposure time. With varying frame rates, it remains the same.

NOTICE

Maximum exposure time with a given frame rate is 1/fps, with a limit of 1/1 seconds. When the selected exposure time is no longer possible because you changed the frame rate, the camera uses the longest exposure time possible. For example, if you configured 1/25 sec at 25 fps and you change the sensor fps to 50, the camera will use 1/50 sec.

➤ Select *HOME* > *SHUTTER* to set the shutter.

➤ Select a preset from the list or add a custom shutter value to the list.

User Buttons *Shutter Increase / Decrease* change between shutter presets.

NOTICE

The camera sensor is optimized for exposure times shorter than 1/24 sec and image artifacts like individual overexposed pixels may appear when using longer exposure times.

8.5 Exposure Index

The Exposure Index (EI) is fundamentally a way to determine which sensor signal level corresponds to mid-gray (around 18 % reflectance) in a log-encoded image. In practice, it functions as a gain control: by selecting a particular EI, you effectively choose the sensor output value that will be treated as middle gray in your log curve. Changing EI does not alter the sensor's inherent dynamic range. It shifts how the scene's exposure is mapped on that fixed range. If you close or open the aperture (or modify shutter speed / ND) by a certain number of stops and adjust EI by the same number of stops in the opposite direction, the mid-gray level in the log image remains unchanged—this property is known as "exposure-normalized" behavior.

On the ARRI ALEXA 35, ARRI uses the LogC4 curve, with mid-gray encoded at a code value of 28 %. When you output to Rec. 709 without any look file applied, that same mid-gray corresponds to approximately 40 % video signal level. The LogC4 encoding maintains fixed relations between code values and stops relative to mid-gray: for example, roughly 10 % code value represents about 1.5 stops below mid-gray and about 40 % represents approximately 2 stops above; these relations hold constant regardless of EI. Because the total dynamic range of the ARRI ALEXA 35 sensor is around 17 stops, adjusting EI merely reallocates how many of those stops are captured above versus below mid-gray without changing the total. At lower EI settings, more highlight headroom above mid-gray is available; at higher EI, more nuance in shadows is preserved, all within the same 17-stop span.

The ARRI ALEXA 35 offers EI values from 160 up to 6400. In addition, there is an Enhanced Sensitivity (ES) mode available for EI 2560 through 6400, where the camera applies an in-camera temporal noise reduction that is baked into ARRIRAW and ProRes files. This ES mode improves low-light performance but may impose certain frame-rate or shutter limitations, which the camera indicates on the EI screen. Importantly, neither the normal nor ES EI settings extend or reduce the sensor's native dynamic range; they only shift the tonal emphasis within that range.

In practical operation, one typically sets the exposure index in combination with aperture, ND filters, and shutter angle to position mid-gray at the correct code value, verified via False Color monitoring: mid-gray targets should appear in the neutral (“green”) zone at 28 % LogC4 (≈ 40 % in Rec. 709). If faces or gray cards fall outside that zone (e.g., into purple/red areas), you adjust exposure or exposure index accordingly to avoid clipped highlights or noisy shadows. For low-light scenarios, ARRI recommends using higher EI values with ES and matching Shadow Texture settings (like EI 2560 ES or 3200 ES with moderate shadow texture, or EI 6400 ES with deep shadow texture) to optimize noise performance and tonal richness. As a result, the exposure index remains a tool for creative and consistent exposure decisions: you “shift” the log curve mapping without altering the sensor’s overall capacity, allowing cinematographers to protect highlights or reveal shadow detail as the scene demands (see figure below).

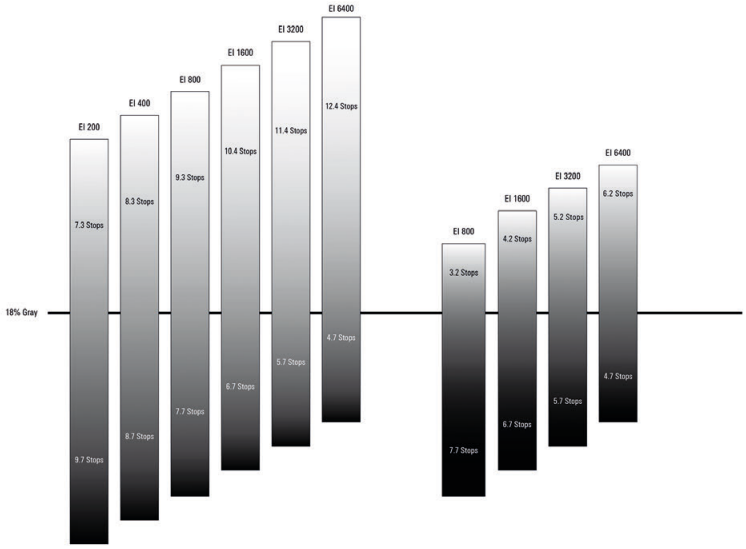

The left image shows the distribution of the ALEV4 sensor (ARRI ALEXA 35 & ARRI ALEXA 35 Xtreme), while the right image shows the distribution in Sensor Overdrive Mode (ARRI ALEXA 35 Xtreme).

To Set the Exposure Index

➢ Select *HOME* > *EI* to set the exposure index.

User Buttons *EI Increase* and *EI Decrease* change the exposure index.

NOTICE

▶ When you change the exposure index during recording, you can only switch within normal EI or within EI with Enhanced Sensitivity, depending on which setting was selected at the start of recording.

8.6 ND Filter

The ARRI ALEXA 35 has a built-in motorized and sealed filter stage for Full Spectrum Neutral Density filters (FSND) with densities of 0.6, 1.2 and 1.8 (and an optical clear filter). In comparison to IRND filters, which have an uneven spectral behavior, or to an ordinary ND filter, which opens at about 675 nm, the FSND filters offer a true, even light attenuation over the whole spectrum. This prevents artifacts from infrared wavelengths and the need for additional IR filters.

➢ Select *HOME* > *ND* to set the ND filter.

User Buttons *ND Increase / Decrease* change the ND filter.

NOTICE

When the camera is de-energized via its POWER button, the built-in ND filters move to a safe transport position when the power down countdown is completed (no glass filter visible in the gate). This position provides better protection against strong impacts to the camera during transport. When the camera is energized again, the previously set ND filter is restored.

8.7 White Balance

White Balance (WB) is the color balance of the camera that should be matched to the color temperature of the light in use. White balance is a red-blue adjustment of the image. To adjust the green-magenta balance, use the color compensation (CC) adjustment. For example, a fluorescent source will have peaks in its spectrum that cannot be corrected with red-blue white balance alone. The CC shift can correct these peaks up to a full green or full magenta gel. One step of CC shift is equal to 035 Kodak CC values or 1/8 Rosco values.

➢ Select *HOME* > *WB* to set the white balance.

➢ Select a preset from the list or add a custom white balance.

User Buttons *WB Increase / Decrease* change between white balance presets.

Automatic white balance calculates the white balance based on the camera's live image and overwrites the active white balance value. The result is stored as the first entry in the WB list.

➢ Select *HOME* > *WB* > *Center AWB* to toggle the auto white balance mode between awb and full frame awb.

➢ Select *HOME* > *WB* and push the *AUTO WB* button.

- With AWB mode set to *Center AWB*, the monitoring outputs show an overlay indicating the area used for white balance calculation.

➢ Push the *AUTO WB* button again within one second to execute automatic white balance.

- The calculated white balance is set and stored as the first entry in the white balance list.

NOTICE

Under- or overexposed images may cause the automatic white balance to fail. Always trigger automatic white balance with properly exposed images.

User Button *Auto WB* executes an auto white balance calculation.

8.8 Timecode

Timecode ensures that each frame of recorded material can be identified with a unique value and synchronized with the correct media, such as audio or the second camera in a multicamera setup. In conjunction with other metadata, like reel names, all recorded media retains its unique identity.

Timecode Run Mode

Rec Run timecode is frequently used on single camera productions that are MOS or use a dumb slate to synchronize picture and sound. Rec Run timecode guarantees continuous timecode on all recorded data. The timecode increments only during recording, by one frame for each image generated by the sensor. Rec Run timecode also works with over- and undercranking.

Free Run timecode is frequently used on multicamera productions with sync sound, picture / sound timecode alignment and allows for easy syncing in post.

Jam Sync timecode mode samples the timecode value once from the timecode connector and then continues counting based on its own high precision crystal clock. The timecode source can be disconnected from the camera after jamming in Jam Sync mode. This mode ensures stable timecode with an offset of less than one frame for each eight hours, after which the camera shall be re-jammed.

As an alternative, you can set the camera to timecode mode Regen (regenerate). In Regen mode, the camera uses the timecode value of the external timecode source. This ensures correct timecode for an infinite duration, but the timecode source shall remain connected to the camera. Please note that while recording, the camera ignores external timecode and uses its internal clock to avoid potential timecode jumps, which can occur due to connection problems such as a faulty timecode cable for example.

➤ Select *HOME* > *TC* > *Options* > *Run Mode*.

Available options:

Rec Run	Timecode increases during recording only. The timecode value increases with every frame generated by the sensor while recording.
Free Run	Timecode increases with every new frame generated by the sensor, independently from recording.

Free Run timecode is only possible if the sensor frame rate matches the project rate. If the camera is over- or undercranking, the timecode frame rate will no longer match the sensor frame rate. Timecode values would be duplicated or dropped. To prevent this, the camera automatically switches to Rec Run timecode when the sensor frame rate is changed. When you set the sensor frame rate back to equal the project frame rate, the timecode will recall the previous free run timecode.

Timecode Mode

Depending on the timecode run mode, the camera offers different options for handling timecode. The timecode can be counted by the camera itself or obtained from an external source.

➤ Select *HOME* > *TC* > *Options* > *Mode*.

Available options:

Preset	The camera uses its internal counter and counts the timecode by itself.
Regen (Media)	The camera uses the end timecode of the last recorded clip and adds one frame count to it to use it as start timecode for the next recording. This option is not available when run mode is set to *Free Run*.
Regen (TC In)	The camera takes the timecode from an external source connected to the TC In connector. The source shall permanently be connected to the TC In connector. If the connection is interrupted or the signal fails, the camera continues to count internally and informs you of the missing source. When the source is reconnected, the camera takes over the time code of the external source again. This option is not available when run mode is set to *Rec Run*.
Regen (LPS-1)	The camera takes the timecode from the Live Production System LPS-1 connected to the rear interface of the camera.

	If the connection is interrupted or the signal fails, the camera continues to count internally and informs you of the missing source. When the source is reconnected, the camera takes over the time code of the external source again. This option becomes available when the LPS-1 Fiber Camera Adapter is connected to the camera. This option is not available when run mode is set to *Rec Run*.
Jam Sync (TC In)	The camera takes the timecode from an external source connected to the TC In connector and tunes its internal timecode clock at the same time to match the clock of the timecode source. During this procedure, the timecode display on the HOME screen, on the timecode menu screen as well as on the Status Info is flashing. Jamming has finished when the timecode display stops flashing. You can disconnect the timecode source now. This option is not available when run mode is set to *Rec Run*. Jam-sync cannot be used in conjunction with genlock synchronization. Due to the tuning mechanism, jamming the camera might take up to 30 seconds and a timeout is issued if tuning could not be completed after 60 seconds.

To Set the Timecode Manually

➤ Select *HOME* > *TC* > *Options* > *Timecode* to edit the timecode.

NOTICE

Timecode cannot be set manually when the run mode is set to either Regen or Jam Sync.

Timecode Count Mode

The Count Mode sets the preference for how timecode is counted when using non-integer project rates (29.97p, 59.94p).

➤ Select *HOME* > *TC* > *Options* > *Count Mode* to set the count mode.

Available options:

Non-Dropframe	Timecode increases with every frame without compensation, resulting in a 1,001 count for 1,000 frames.
Dropframe	Timecode values are dropped with a defined pattern (frame counts 00 and 01 of every minute, except every 10th minute) to re-adjust for the drift. A semicolon between timecode seconds and frames indicates an active dropframe timecode.

Timecode Offset

You can apply an offset to LTC input signals to compensate for timecode offsets in external devices.

➤ Select *HOME* > *TC* > *Options* > *TC Offset*.

➤ Adjust the timecode offset in the range of *-20* to *+20* frames.

9 Look Settings

9.1 Color Processing and Color Space

LogC4

ARRI cameras record and output images in the LogC wide gamut color space to preserve the full range of color information and high dynamic range captured by ARRI's camera sensors. The LogC curve uses logarithmic encoding, maintaining a consistent relationship between exposure (measured in stops) and signal across a broad range. Its shape closely resembles the exposure curves of film negatives, ensuring a cinematic aesthetic.

ARRI LogC4 succeeds the earlier LogC3 encoding, which has been in use since 2011. It was specially developed to optimize encoding precision and production usability for the expanded dynamic range of the ALEV4 sensor in the ARRI ALEXA 35.

Because of their different sensor technologies, LogC4 and LogC3 images differ in appearance. The original ALEXA sensor and the new ARRI ALEXA 35 sensor have clear dynamic ranges, necessitating unique approaches to logarithmic encoding for each.

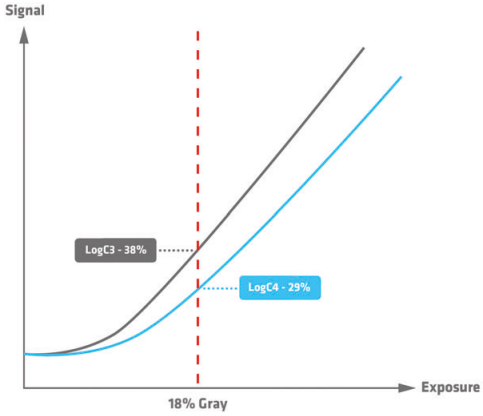

In a LogC4 image, 18% gray appears darker compared to LogC3. This is because the LogC4 curve extends further to the right in the graph, causing the 18% gray point to fall lower on the curve.

For further information please see the ARRI LogC4 Specification, available in the download section of the ARRI ALEXA 35 Website.

LogC employs scene-based encoding. The signal level rises consistently with each increase in exposure, measured in stops. This approach, combined with ARRI's wide gamut color space, closely resembles the characteristics of film scan files and is ideal for preserving image information. To display LogC material accurately on SDR or HDR monitors (Rec. 709/Rec. 2020) or for digital projection (P3), the image is tone-mapped and transformed into the target color space. This conversion is typically achieved using a 3D Look-Up Table (3D LUT).

You can download a set of pre-generated Look-Up Tables here.

VF Processing

➤ Select *MENU* > *Image* > *Look* > *VF Processing* to set the processing for the EVF and the Monitor.

Available options:

LogC4	Images are output in LogC4 on EVF and the Monitor.
Look (SDR)	The active look is applied to EVF and the Monitor in SDR.
Look (EVF: HDR, Mon: SDR)	The active look is applied to EVF in HDR. The Monitor remains in SDR mode.

LOG SDR HDR	The applied processing is indicated by the processing icon in the status information of the viewfinder outputs.

User Buttons *VF Check LogC4*, *VF Check HDR* and *VF Processing* configure VF Processing.

SDI Processing

➤ Select *MENU* > *Image* > *Look* > *SDI 1 Processing* to set the processing for the SDI 1 output.

➢ Select *MENU* > *Image* > *Look* > *SDI 2 Processing* to set the processing for the SDI 2 output.

Available options:

LogC4

Images are output in LogC4 on the respective SDI output.

Wireless Video Optimized LogC4

Wireless video transmission systems are designed with compression schemes optimized for final image signals, such as Rec.709. When these systems are used to transmit a log signal—which is darker and has lower contrast—they can be pushed to the limits of their operating range. This can lead to compression artifacts, which are more pronounced because of the characteristics of a log signal.

Wireless Video Optimized (WVO) LogC4 is an intermediate encoding format for SDI outputs, specially designed to enhance monitoring image quality when transmitting LogC4 signals through wireless video transmitters.

At the receiving end, the WVO LogC4 signal shall be decoded using a corresponding WVO LogC4 decoding LUT before applying any further color transformations, such as LUTs or CDLs. This decoding LUT can be loaded directly into the wireless receiver or serve as the initial step in your on-set color workflow:

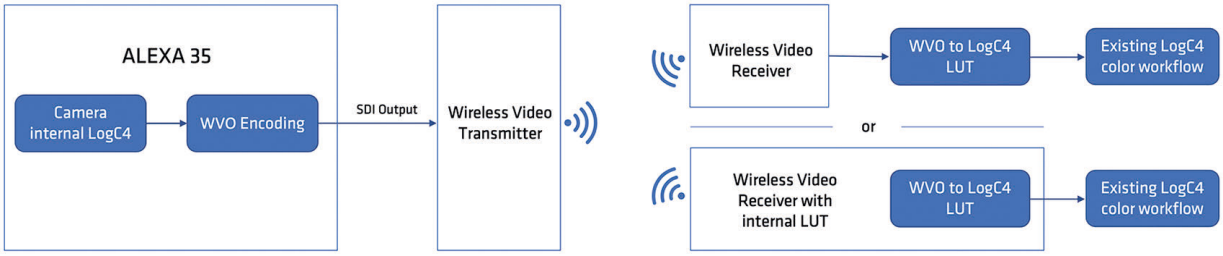

The decoding LUT converts the signal back to a standard LogC4 format, allowing it to be processed exactly as if LogC4 had been transmitted directly from the start.

Download the decode LUT from the ARRI website: LogC4 WVO decode LUT package.

For further information please see the Wireless Video Optimized LogC4 White Paper.

Look

The active look is applied to the respective SDI output.

NOTICE

Please note that a WVO-encoded image without the decoding LUT is incompatible with LogC4 LUTs or image analysis tools, such as false color displays on monitors. Evaluating images without the decoding LUT may lead to incorrect assessments and could cause significant exposure problems.

User Buttons *SDI 1 Check LogC4* and *SDI 2 Check LogC4* set the related output processing temporarily to *LogC4*.

SDI Color Space

➢ Select *MENU* > *Image* > *Look* > *SDI 1 Color Space*

➢ Select *MENU* > *Image* > *Look* > *SDI 2 Color Space*

Available options:

- *REC 709 (SDR)*
- *REC 2020 (SDR)*
- *REC 2100 / PQ (HDR)*
- *REC 2100 / HLG (HDR)*

NOTICE

When you use a look file with custom color management, the color space selection is limited to the color spaces specified in the look file.

LOG	709	2020	HLG	PQ	WVO	The applied processing is indicated by the processing icon in the status information of the related SDI output.

HDR White Level

The HDR White Level setting defines the reference brightness used for processing HDR signals. It is applied globally to all monitoring outputs configured for HDR output. It allows you to choose between 100 nits (traditional SDR reference) and 203 nits (commonly used in modern HDR workflows) to match your production pipeline, grading environment, or display requirements.

➤ Select *MENU* > *Image* > *Look* > *HDR White Level*

Available options:

100 nits	Sets the HDR reference white to 100 nits, corresponding to the traditional SDR diffuse white level. Use this setting for SDR-based or legacy workflows, or when matching Rec.709 environments where 100 nits represent nominal white. This is the factory default value.
203 nits	Sets the HDR reference white to 203 nits, a common value in modern HDR workflows such as ITU-R BT.2100 (PQ/HLG). This higher reference level provides increased headroom above diffuse white, enabling more perceptually impactful highlights and more accurate HDR rendering on high-brightness displays.

NOTICE

When a custom Color Management Look is loaded, the camera does not have knowledge of the reference white level. In this case, the setting is de-activated and reads “Custom”, to avoid providing misleading information to the user.

9.2 ARRI Look File ALF-4

The ARRI ALEXA 35 uses an updated version of the ARRI Look File ALF. Unlike the previous ARRI Look File ALF-2, which included both the creative intent and the conversion to a display color space, the new ARRI Look File ALF-4 is a log-to-log file. It only carries the creative intent. As a result, you can use the ARRI Look File ALF-4 across multiple target color spaces, enabling simultaneous viewing of SDR and HDR images with the same look. The ARRI Look File ALF-4 can be created using the ARRI Reference Tool.

The conversion of the LogC4 image to a display color space is handled by in-camera Display Render Transforms (DRTs). These DRTs are designed to convert the image to the most common display color spaces (REC 709, REC 2020, REC 2100 PQ, REC 2100 HLG), ensuring visually appealing, cinematic results. They are an integral part of the REVEAL Color Science process and can also be downloaded from the ARRI website as an ARRI LogC4 LUT package.

Starting with the ARRI ALEXA 35 Software Update Package SUP 1.2.1 and ARRI Reference Tool version 1.4.0, users now have the option to create an ARRI Look File ALF-4c with their own custom Display Render Transforms (DRTs).

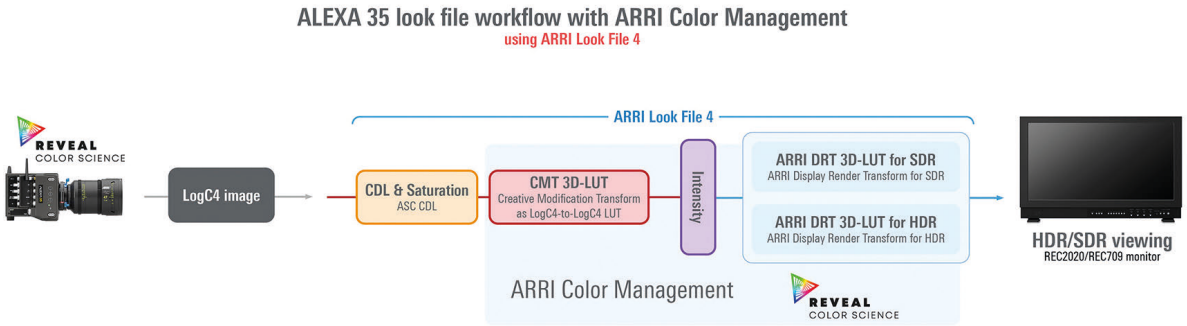

The figure above shows the structure of a "classic" ARRI Look File ALF-4. The creative intent embedded in a look file as a Log-to-Log LUT is referred to as the Creative Modification Transform (CMT). The CMT allows complete control over the image within the LogC4/AWG4 color space. The look files provided by ARRI incorporate the official ARRI Display Render Transforms (DRTs) for SDI outputs, including REC 709, REC 2020, REC 2100 PQ, and REC 2100 HLG.

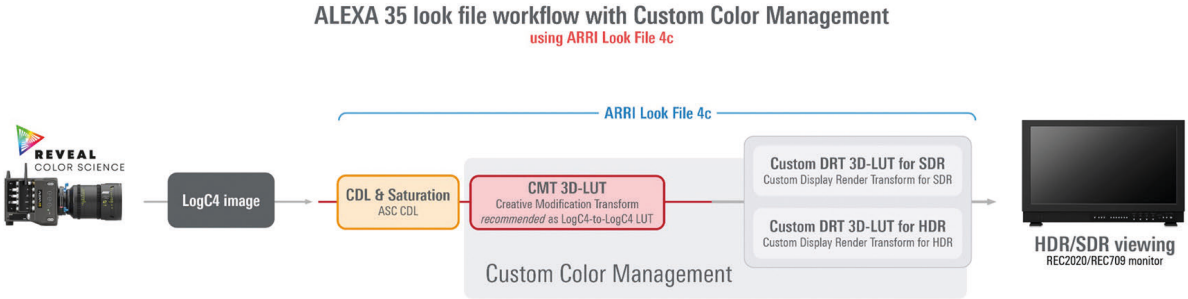

The figure above shows the structure of an ARRI Look File ALF-4c that utilizes a custom Display Render Transform. In addition to the creative intent, it defines separate target color spaces for the SDI outputs —one for SDR and another for HDR.

The Look setting and the SDI Color Space setting provide an indication of whether you are using a Look file with ARRI's standard color management or with Custom Color Management:

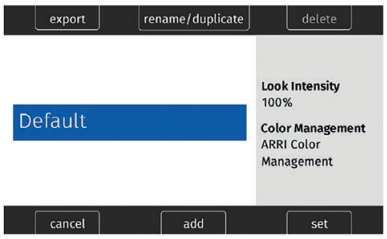

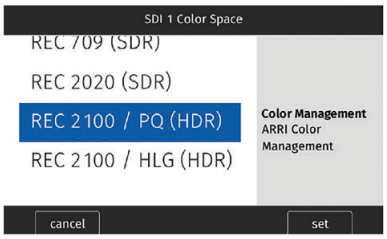

To differentiate the look files, those using ARRI Color Management keep the .alf4 extension, while look files with Custom Color Management use the *.alf4c extension. The Look or Premium License is required for the use of *.alf4c look files.

To use custom color management, you will need ARRI Reference Tool version 1.4.0 or later, which allows you to create ARRI Look Files ALF-4c for custom color management.

For more information and instructions on how to create look files with custom color management, please read the corresponding white papers in the Technical Downloads section on the ARRI website.

NOTICE

The ARRI Look File ALF-1 is used with the ARRI ALEXA Classic and ARRI ALEXA XT.

The ARRI Look File ALF-2 is used with the ARRI AMIRA, ARRI ALEXA Mini, ARRI ALEXA SXT, ARRI ALEXA LF, ARRI ALEXA Mini LF, and ARRI ALEXA 65.

The ARRI Look File ALF-4 is used with ARRI ALEXA 35 cameras.

The ARRI Look File ALF-4c is used with ARRI ALEXA 35 cameras starting from SUP 1.2.1 and later.

9.3 To Set the Look

➤ Select *MENU* > *Image* > *Look* > *Look*.

➤ Select a look from the list or add a look from an inserted USB-C medium or the defaults list.

ARRI Look Library

The looks are numbered within nine themed groups: Application, Black-and-White, Contrast, Environment, Film, Period, Season, Special, and Tinted. In a sense, the looks can be thought of as being similar to different film stocks, each providing a unique but repeatable aesthetic when combined with the cinematographer's choice of lenses. The ARRI ALEXA 35 includes the new LogC4 version of the ARRI Look Library.

The ARRI Look Library is a licensed feature. See section "Licensing [▶ 100]" for more information.

For further information about the ARRI Look Library, please visit the ARRI Look Library FAQs.

➤ Select *MENU* > *Image* > *Look* > *Look* > *Add* > *Look Lib*.

➤ Select a look from the list and push the *IMPORT* button to add the look to the installed looks list.

➤ Import further looks from the Look Library or push the *CANCEL* button to abort and exit.

Look Duplicate and Rename

➤ Select *MENU* > *Image* > *Look* > *Look*.

➤ Select a look from the list and push the *DUPLICATE / RENAME* button.

➤ Enter a new name and push the *SET* button to rename the look or push the *DUPLICATE* button and then the *SET* button to duplicate the look.

NOTICE

The Default look cannot be renamed.

Look Export

You can export look files to the USB-C medium to be sent to postproduction or to be imported on other cameras.

➤ Insert the USB-C medium into the camera.

➤ Select *MENU* > *Image* > *Look* > *Look*.

➤ Select a look from the list and push the *EXPORT* button.
The look file is stored in folder ARRI/ALEXA35/LOOKFILES on the USB-C medium.

9.4 Look Intensity

The Look Intensity controls the degree to which the look is applied to the LogC4 image, with 100% representing a fully applied look and 0% resulting in a standard LogC4 image. The look intensity value is stored as metadata within the ARRI Look File ALF-4. When the look is loaded, the camera reads this metadata and applies the corresponding intensity. This allows the look intensity to be adjusted as needed, offering flexibility in how the look is applied.

➤ Select *MENU* > *Image* > *Look* > *Look Intensity* to set the look intensity of the active look between *10%* and *100%*.

NOTICE

Look Intensity cannot be adjusted when using look files with custom color management (*.alf4c look files).

10 ARRI Textures

ARRI digital cameras have always featured a “texture” setting. It is embedded in the sensor's image capture process and applied to the ARRIRAW and ProRes outputs. This setting includes various finely adjusted parameters that control both the amount and the character of grain in the image. It also affects the contrast at different levels of detail, influencing the perceived sharpness, or Modulation Transfer Function (MTF) curve.

Until now, ARRI cameras were pre-programmed with a single, fixed texture setting optimized for a broad range of shooting scenarios. The ARRI ALEXA 35 offers cinematographers the flexibility to move beyond this default setting, providing access to a growing selection of ARRI textures, each tailored for specific applications. This feature significantly changes how the camera captures images, offering greater creative control.

The three primary texture characteristics—grain volume, grain character, and perceived sharpness—are driven by approximately 30 image processing settings that take place early in the imaging chain, before the ARRIRAW image is generated. Given the complex interactions between many of these steps, providing full access to all settings via a user interface would be excessively complicated. Instead, we have grouped practical combinations of these settings into individual ARRI texture files. The camera comes with several pre-installed ARRI textures, developed in close collaboration with selected cinematographers. The textures are applied to the image prior to the exposure index setting, which controls the camera's sensitivity, and before the ARRI Look File processing, which manages color. Since ARRI textures are applied during image processing before the ARRIRAW image is created, they are always baked into both ARRIRAW and ProRes outputs.

When you use a texture other than the K445 Default texture, it is crucial to test the ARRI textures during preproduction in the best possible viewing environment. A texture that appears correct in a DI suite or on a high-end display can be very subtle or even imperceptible when viewed through the camera's viewfinder or on its SDI outputs. As a result, we recommend testing ARRI textures in preproduction on a large (at least 30-inch) high-quality UHD 4K monitor, preferably in HDR. The best practice is to view the images on an HDR 4K grading display to ensure accurate evaluation.

ARRI Textures is a licensed feature. See section "Licensing [▶ 100]" for more information.

Naming Scheme

ARRI texture names are composed of two parts: a technical summary of the texture and a descriptive word or phrase that conveys its characteristics. While ARRI textures encompass around 30 image processing settings, we have distilled them into four key attributes for the technical summary, allowing you to quickly understand what to expect from each texture.

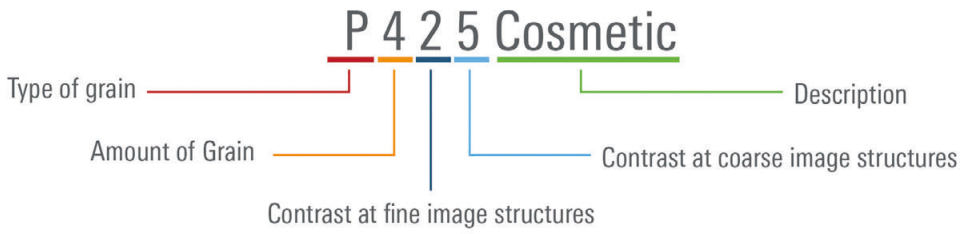

Type of grain	The type of grain can vary in quite complex ways, e.g. more or less color, fine/coarse etc. The grain of the default texture K445 Default complies with a letter in the middle of the alphabet. The bigger the variations in color, size etc. are of this default grain, the further away is the letter of another ARRI texture. The closer the letters are in the alphabet, the more similar is the impression regarding the type of grain.
Amount of grain	The higher the number, the more grain there is (0 to 9).
Contrast at fine image structures	Indicates the amount of high spatial frequencies. The higher the number, the higher the contrast (0 to 9).
Contrast at coarse image structures	Indicates the amount of low spatial frequencies. The higher the number, the higher the contrast (0 to 9).
Description	A descriptive name of the texture.

➤ Select *MENU* > *Image* > *Texture* > *Texture* to set the texture.

Available options:

F567 Clarity	A texture designed to work for any kind of footage, with increased sharpness and detail compared to the K445 Default texture. The Clarity textures are a perfect choice for landscape shots. Works best for low to mid EI settings.
F578 High Clarity	A texture designed to work for any kind of footage, with even more detail compared to the K445 Default texture. The Clarity textures are a perfect choice for landscape shots. Works best for low to mid EI settings.
G522 Soft Nostalgic	A grainy texture with a subtle vintage feel, designed to render some unsaturated grain and a softer character. Little softer vintage Texture than G733 Nostalgic. Perfect for all EI settings.
G733 Nostalgic	A grainy texture with a subtle vintage feel, designed to render some unsaturated grain and a soft character, while the contrast at fine and coarse image structures is a bit higher than G522 Soft Nostalgic. Perfect for low to mid EI settings.
G633 Light Nostalgic	A grainy texture with a vintage feel, designed to render a little bit less grain than G733 Nostalgic but has the same quality of image texture, just a bit less intense. The overall contrast and the soft character of it is like that of G733 Nostalgic. The unsaturated grain in this texture is additionally emphasizing the nostalgic film emulation. Perfect for low to mid EI settings.
G733 Nostalgic	A grainy texture with a vintage feel, designed to render a lot of grain and a soft character. The unsaturated grain type was created based on direct feedback from cinematographers. Perfect for all EI settings.
H547 Deep Shadow	A texture designed for the darkest shots. This texture has low noise, and the remaining grain is less saturated. It has higher clarity and even more shadow detail retention than the L345 Shadow texture. Works best for mid to high EI settings.
K445 Default	The K445 Default texture is designed to work well for all subject matters and settings, while making the most of the camera's cinematic strengths. It is forgiving on skin, but also renders images with exceptional clarity and detail, which makes it also a perfect texture for green screen shots. This is also the texture to use when shooting with ALEXA 35 and previous ARRI digital cameras, as it closely matches those cameras textures. Perfect for all EI settings.
L345 Shadow	A texture based on the K445 Default texture, with lower noise and grain optimized for images with a lot of dark content. The visible grain emulates the look of grain in the toe of color negative film and is more pleasing in darker scenes. Works best for mid to high EI settings.
P425 Cosmetic	A softer texture, very close to the cinematic K445 Default, especially recommended for rendering skin tones. More forgiving on skin while keeping structures and highlights pronounced. Low to moderate grain. Perfect for all EI settings.

The Multicam license makes additional textures available. They are designed for use in live production environments and have been created to achieve increased sharpness and detail.

MCS0 Sharpening 0 *MCS1 Sharpening 1* *MCS2 Sharpening 2* *MCS3 Sharpening 3* *MCS4 Sharpening 4* *MCS5 Sharpening 5*	The Multicam Shapening textures offer low grain for clean images and work best at low to medium EI settings. At higher EI settings, it is advisable to choose between MCS0 and MCS3 to avoid over-sharpening the higher EI noise features. The MCS4 and MCS5 textures are best suited for low to medium EI settings and are not recommended for high EI settings, as these Multicam textures can accentuate the grain at higher EI values above 2000 ASA. ARRI recommends starting with MCS3 as a starting point for sharpness/ detail settings when matching to competitor's camera systems. If there is a desire for a softer or more cinematic texture rendering, it is recommended to use the standard K445 Default texture or the MCS0 texture for the lowest sharpness. If you wish to match existing ALEXA 35 footage, you should use the standard K445 Default texture.

The applied texture is indicated by the texture icon in the status information of EVF and SDI 1/2.

For additional information please visit the Textures Website.

11 Recording

11.1 Recording Medium

CAUTION

Hot Surfaces on Recording Media

During extended operation, high data rates and/or operation at high ambient temperatures, the recording media in the camera can get hot to the touch and can cause pain or burns if held for too long directly after removal.

- Do not handle the recording media for longer than three seconds and remove it quickly but carefully.
- Consider wearing protective gloves when removing the recording media or let it cool down beforehand.
- Do not put any labels or adhesive tape on the recording media (especially the side facing the camera body). The recording media shall have full contact to the thermal surface to ensure proper heat conduction.

NOTICE

Recording Media Damage Because of Incorrect Handling

Damage to the Recording Media or Loss of Data.

- Always put the recording media in the camera as described in this document.
- Keep the media door closed to prevent dirt and moisture from entering the camera.
- Do not put any labels or adhesive tape on the recording media. The metal surface is used for cooling. A hot medium can have reduced performance. The plastic surface can easily be broken off when a label is removed.
- Never remove a drive while recording - this may damage the recorded clip.
- If the recording process is interrupted by power loss or drive removal, transfer all the data from the drive and format it before using it again.
- While we do everything to assure reliable functioning of different recording media such as Codex Compact Drives, and while the mean time before failure (mtbf) for drives is excellent, a failure that results in loss of data may occur at any time. Therefore, you are obliged to implement and maintain at any time adequate and necessary data security measures and back up drive content as soon as possible. ARRI assumes or accepts no liability or responsibility for data loss or data corruption, or any other damages, loss, or harm because of malfunction of recording drives.

NOTICE

You can record a maximum of 400 clips on a drive. When the maximum of 400 clips is reached, the recording media will be declared as full and further recording onto the media is not possible.

Codex Compact Drives

The Codex Compact Drive is designed to meet the demanding needs of creative professionals using the ARRI ALEXA 35. It offers robust mechanical protection, efficient cooling, and a reliable connector for its high-speed integrated flash memory. Available in capacities of 1 TB (960 GB usable) and 2 TB (1920 GB usable), the Compact Drive is optimized for different recording needs.

The 2 TB version provides approximately double the speed for all ARRIRAW formats on the ARRI ALEXA 35. At 24 fps in ARRIRAW 4.6K 3:2 Open Gate, the recording times are around 25 minutes for the 1 TB drive and 50 minutes for the 2 TB drive. In Apple ProRes 4444 4K 16:9 at 24 fps, the recording times extend to about 90 minutes for the 1 TB drive and 180 minutes for the 2 TB drive.

The camera records data to the ARRI UDF file system, which can be accessed by operating systems without requiring special software. Direct access to recorded media is possible via the USB-C Codex Compact Drive Reader, the Compact Drive Dock, or an SXR Capture Drive Dock with a Compact Drive Adapter.

Codex Compact Drives are rated for use in environments with temperatures from 0 °C to 70 °C (32 °F to 158 °F). If the drive is inserted below 0 °C (32° F), the camera will enter an alert mode and block access to the drive until it reaches to the minimum operating temperature. After the drive reached the specified temperature range, the camera will resume loading the media and return to normal operation.

To Insert the Codex Compact Drive

➢ To access the media slot, slide the media door release towards the camera rear to open the spring-loaded door.

➢ With the contact pins first and the Codex label side facing out (away from the camera body), gently insert the Compact Drive until it locks.

➢ Gently close the media door. Do not force the door closed if the Compact Drive is not fully inserted. Do not force the Compact Drive into the slot in wrong orientation - the contacts could be damaged.

To Remove the Codex Compact Drive

➢ It is not necessary to unmount the Compact Drive before you remove it. You can remove whenever the Compact Drive LED shows solid green.

➢ Slide the media door release towards the rear of the camera to open the spring-loaded door.

➢ Hold the Compact Drive with your thumb and index finger and pull it out carefully of the media slot.

To Erase the Recording Medium

NOTICE

When you erase the Compact Drive, all data is completely erased and cannot be recovered afterwards. Make sure that all data has been copied from the Compact Drive before you erase it.

- ▶ Do not de-energize the camera while erasing.
- ▶ Do not remove the Compact Drive while erasing.

Before you use a Codex Compact Drive with the camera, you shall format it with the camera to establish the required file system. Codex Capture Drives are initially formatted with the UDF file system, which is read-only for computers. They are labeled as ARRI_UDF until the first clip is recorded. After a clip is recorded, the Compact Drive's name is updated to reflect the camera's index letter and the current reel number.

➢ Select *MENU* > *Media* > *Erase Media*.

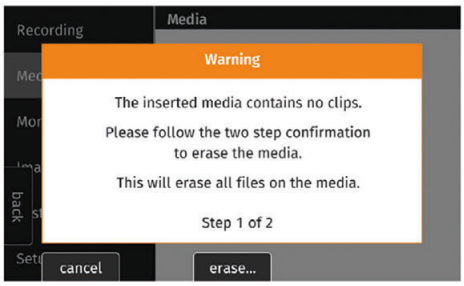

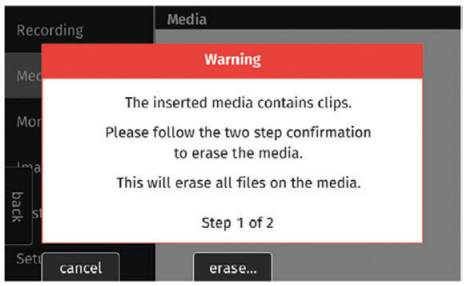

The camera informs you whether there are clips on the Compact Drive (red dialogue) or not (orange dialogue). This information only refers to clips that were recorded with an ARRI ALEXA 35 or an ARRI ALEXA Mini LF, but not to other files that the user has saved on the Compact Drive.

➤ Push the *ERASE* button twice to start erasing the Compact Drive or push the *CANCEL* button to abort and exit, or

➤ Select *Side Display* > *Settings* > *Erase Media*.

Push the *YES* button to start erasing the Compact Drive or push the *NO* button to abort and exit.

Compact Drive LED Status

LED State	Compact Drive Status
Solid Green	Standby, ready to record and safe to remove.
Solid Red	Read / write access during Playback or Recording. Do not remove the Compact Drive. As recording is stopped, it takes a few seconds to finalize the recorded clip. During this time, the Compact Drive should not be removed.
Flashing Blue	Compact Drive is being loaded or unloaded.
Flashing Red	Error, see *MENU* > *Alerts* for details.
Off	Compact Drive cannot be accessed. Please try reinserting the Compact Drive. If the problem persists, check the Compact Drive Status with Codex Device Manager.

Media Info

➤ Select *MENU* > *Info* > *Media Info* for additional information on the inserted Compact Drive.

11.2 Recording Codec

MXF (Material eXchange Format)

The camera records exclusively in the MXF (Material Exchange Format) container format. MXF is a professional standard widely used in broadcast and film production. It is designed for the satisfactory interchange of audio-visual content and supports different video and audio codecs, along with rich metadata. It is particularly suited for applications requiring high-quality video, precise synchronization, and comprehensive metadata handling.

MXF files are commonly used for transferring footage from digital cameras to production software, facilitating the repurposing of content for different platforms, and delivering movies to commercial theaters as part of Digital Cinema Packages (DCPs).

ARRIRAW

ARRIRAW is ARRI’s uncompressed and unencrypted sensor data format, preserving the camera's native color response and exposure latitude. It captures raw sensor data in a single channel, which is then processed through a color reconstruction algorithm—commonly known as de-bayering—to generate full-color images based on the Bayer pattern filter array.

De-bayering is performed using the ARRI Debayer Algorithm (ADA), available through the ARRI Imaging SDK and integrated into the ARRI Reference Tool (ART). This algorithm is also supported by major postproduction software for dailies processing and final mastering.

Each ARRIRAW frame includes a CRC32C checksum stored in the image header, enabling verification of data integrity during copying. It's important to note that this checksum validates only the image data, not the entire file.

ARRIRAW is a licensed feature. See section "Licensing [▶ 100]" for more information.

High Density Encoding (HDE)

While the camera records ARRIRAW data, it does not directly record HDE-encoded files. To reduce storage requirements, ARRIRAW files can be encoded using CODEX High Density Encoding (HDE) technology. HDE is a lossless, variable bitrate encoding scheme optimized for Bayer pattern images, achieving data reductions of up to 40–50% without compromising image quality. The ARRIRAW HDE Transcoder is a standalone application that facilitates this conversion, producing MXF/HDE files suitable for efficient storage and postproduction workflows.

Alexa 35 Xtreme

ARRICORE

ARRI has developed a proprietary recording codec that combines all the advantages of ARRIRAW with maximum flexibility and a reduced data rate: ARRICORE.

ARRICORE is a next-generation RGB codec developed with high dynamic range encoding in mind. It delivers pristine image quality and post-production flexibility while maintaining a low data rate. The ARRICORE workflow on set and in post remains consistent with existing workflows. Like ARRIRAW, ARRICORE includes the ARRI Look File 4, ARRI Textures, MXF wrapper, metadata, and audio handling.

ARRICORE main features:

- Futureproof RGB codec optimized for ALEXA 35's 17 stops of dynamic range and beyond
- 18 bit linear Image data from the ALEV4 sensor stored in a 13-bit RGB file in a logarithmic coding (we call it "Sensor Log")
- Enabling higher in-camera speeds in ALEXA 35 Xtreme with up to 330fps in regular <or up to 660fps in Sensor Overdrive mode
- Flexible adjustments in post-production such as exposure index, white balance and tint
- Fast proxy modes for speedy preview processing
- Full support through the ARRI Image SDK within the ARRI Partner Program
- MXF essence wrapping documented in (SMPTE RDD 61:2025 – ARRICORE)

For more information, please refer to the ARRICORE White Paper, which can be downloaded from the Learn & Help section of ARRI's website.

Apple ProRes

Apple ProRes is a high-quality, variable bitrate (VBR) codec widely used in professional video production. It offers a balance between excellent image quality and manageable file sizes, making it a cost-effective alternative to uncompressed formats like ARRIRAW. ProRes supports different resolutions and frame rates, with different flavors tailored to specified needs:

- **ProRes 422 HQ:** A high-quality 4:2:2 codec that provides visually lossless preservation of professional HD video. It supports 12-bit pixel depths and is applicable for most postproduction workflows.
- **ProRes 4444:** A high-quality 4:4:4 codec that includes an alpha channel, making it ideal for motion graphics and compositing. It supports up to 12-bit color depth and is applicable for high-end postproduction tasks.
- **ProRes 4444 XQ:** The highest-quality ProRes variant, supporting 4:4:4:4 image sources with a very high data rate to preserve detail in high-dynamic-range imagery. It supports up to 12-bit color depth and is designed for extreme visual effects processing.

Recording in Apple ProRes requires less storage space and eliminates the need for extensive post-processing, making it a practical choice for many production workflows. However, as a variable bitrate codec, the remaining recording time displayed on the camera may fluctuate based on the complexity of the recorded content. For instance, scenes with high motion or intricate details may result in shorter recording durations, while simpler scenes may allow for longer recordings.

➢ Select *Menu* > *Recording* > *Recording Codec* to set the correct recording codec.

Available options:

Apple ProRes 422 HQ	Use for high quality TV production. Suitable for creative color correction.
Apple ProRes 4444	Use for high quality TV and cinema production. Very suitable for creative color correction and visual effects work such as pulling mattes.
Apple ProRes 4444 XQ	The ideal choice for productions that are shooting for premium image quality, are looking for extreme color grading and want to preserve the superior tonal range of ARRI's Log C signal.
ARRIRAW (License)	Use for cinema production, visual effects, and high-quality TV. It is the best format for creative color correction, visual effects work and archiving.
ARRICORE	Use for cinema production, visual effects and high-quality TV. Use for creative color correction, visual effects work and archiving, with reduced data rate by 50% compared to ARRIRAW, while preserving the same high level of image quality.

NOTICE

▶ A change between recording codecs may require a camera reboot.

RAW ProR CORE The set recording codec is indicated by the codec icon in the status information of EVF and SDI.

11.3 Sensor Mode & Recording Resolution

Sensor Mode defines the portion of the sensor that is being read, which directly affects the maximum frame rate, data throughput, and lens compatibility. Sensor modes refer to the number of horizontal photosites (in thousands, or "K") and the aspect ratio utilized.

Recording Resolution indicates the resolution of the video file saved by the camera. On the ARRI ALEXA 35 Xtreme, the number of photosites read from the sensor matches the resolution of the recorded image. On the ARRI ALEXA 35 in some modes (such as 4K 16:9 – 2K), a larger area of the sensor is read out and then down sampled to the target resolution.

Some sensor modes require a license. Refer to section "Licensing [▸ 100]" for details.

➤ Select *Menu* > *Recording* > *Sensor Mode* to select the correct Sensor Mode.

➤ Select *Menu* > *Recording* > *Recording Resolution* to select the related Recording Resolution.

NOTICE

- A change between Sensor Modes may require a camera reboot.
- The Recording Resolution is set automatically if a Sensor Mode offers only one associated Recording Resolution.

4K The set sensor mode is indicated in the status information of EVF and SDI.

11.3.1 Sensor Modes & Recording Resolutions ARRI ALEXA 35 / ALEXA 35 LIVE

4.6K 3:2 Open Gate

Maximum image quality, maximum resolution, and maximum flexibility in postproduction for shooting with spherical and anamorphic lenses. The image area is larger than traditional Super 35 film, so not all Super 35 lenses cover. The sensor mode with the highest data rate.

License

Active Image Area (Photo sites)	**Recording Resolutions**	
4608 x 3164		
Active Image Area (Dimensions)	ARRIRAW:	4.6K (4608 x 3164)
28.0 x 19.2 mm / 1.102 x 0.756"		
Image Circle Ø	ProRes:	4.6K (4608 x 3164)
33.9 mm / 1.337"		

4.6K 16:9

Full sensor width recording in a 16:9 format that suits many spherical Super 35 and all large format lenses, with room for flexibility in postproduction. Lower data rate than 4.6K 3.2 Open Gate. For ProRes, the 4.6K sensor area is always down sampled in camera to a recording resolution of 4K.

License

Active Image Area (Photo sites)	**Recording Resolutions**	
4608 x 2592		
Active Image Area (Dimensions)	ARRIRAW:	4.6K (4608 x 2592)
28.0 x 15,7 mm / 1.102 x 0.618"		
Image Circle Ø	ProRes:	4K (4096 x 2304)
32.1 mm / 1.264"		

4K 16:9

For projects using spherical lenses for a 16:9 or 1.85:1 deliverable with a 4K Cine resolution (4096 horizontal pixels). Also useful for spherical 16:9 or 1.85:1 projects with a UHD deliverable that want a little extra area for resizing, repositioning, stabilizing, or tracking in post. The sensor area is close to the traditional spherical Super 35 film format for compatibility with a wide range of Super 35 lenses. Multiple in-camera down sampling options provide lower data rates.

Active Image Area (Photo sites)	**Recording Resolutions**	
4096 x 2304		
Active Image Area (Dimensions)	ARRIRAW:	4K (4096 x 2304)
24.9 x 14.0 mm / 0.980 x 0.551"		
Image Circle Ø	ProRes:	4K (4096 x 2304)
28.6 mm / 1.125"		UHD (3840 x 2160) 2K (2048 x 1152) HD (1920 x 1080)

4K 2:1

For shooting with all spherical Super 35 and large format lenses for a target deliverable of 2:1, fulfilling 4K mandates.

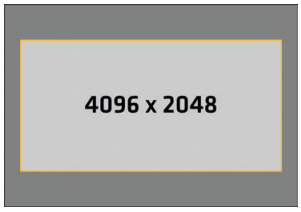

Active Image Area (Photo sites)	**Recording Resolutions**	
4096 x 2048		
Active Image Area (Dimensions)	ARRIRAW:	4K (4096 x 2048)
24.9 x 12.4 mm / 0.980 x 0.490"		
Image Circle Ø	ProRes:	4K (4096 x 2048)
27.8 mm / 1.095"		

3.8K 16:9

For projects using spherical lenses for a 16:9 UHD deliverable. This is the 4K recording format with the lowest data rate for lowest cost and with the smallest image circle for maximum compatibility with spherical Super 35 lenses.

Active Image Area (Photo sites)	**Recording Resolutions**	
3840 x 2160		
Active Image Area (Dimensions)	ARRIRAW:	UHD (3840 x 2160)
23.3 x 13.1 mm / 0,918" x 0.516"		
Image Circle Ø	ProRes:	UHD (3840 x 2160)
26.8 mm / 1.054"		

3.3K 6:5

For projects using 2x anamorphic Super 35 lenses for a 2.39:1 deliverable. Negates the necessity of cropping Open Gate footage and fulfills 4K mandates.

Active Image Area (Photo sites)	**Recording Resolutions**	
3328 x 2790		
Active Image Area (Dimensions)	ARRIRAW:	3.3K (3328 x 2790)
20.2 x 16.9 mm / 0.796 x 0.693"		
Image Circle Ø	ProRes:	3.3K (3328 x 2790)
26.4 mm / 1.039"		3.8K 2.39:1 Ana. 2x (3840 x 1608)

License

3K 1:1

For shooting with 2x anamorphic lenses for a target deliverable of 2:1, fulfilling 4K mandates.

License

Active Image Area (Photo sites)
3072 x 3072
Active Image Area (Dimensions)
18.7 x 18.7 mm / 0.737 x 0.737"
Image Circle Ø
26.4 mm / 1.041"

Recording Resolutions	
ARRIRAW:	3K (3072 x 3072)
ProRes:	3K (3072 x 3072)
	3.8K 2:1 Ana. 2x (3840 x 1920)

2.7K 16:9

For projects shooting with 2x anamorphic lenses for a target deliverable of 16:9, fulfilling 4K mandates. De-squeeze applied in-camera.

License

Active Image Area (Photo sites)
2743 x 3086
Active Image Area (Dimensions)
16.7 x 18.8 mm / 0.656 x 0.738"
Image Circle Ø
25.1 mm / 0.988"

Recording Resolutions	
ProRes:	UHD 16:9 Ana. 2x (3840 x 2160)

2K 16:9 S16

Close to the traditional Super 16 film format and therefore most Super 16 lenses cover. Sometimes used to have extra padding around an HD deliverable.

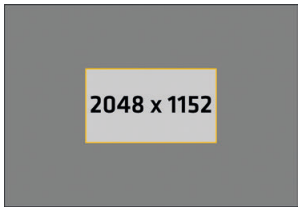

Active Image Area (Photo sites)
2048 x 1152
Active Image Area (Dimensions)
12.4 x 7.0 mm / 0.490 x 0.276"
Image Circle Ø
14.2 mm / 0.561"

Recording Resolutions	
ProRes:	2K (2048 x 1152)

11.3.2 Sensor Modes & Recording Resolutions ARRI ALEXA 35 Xtreme

ALEXA 35 Xtreme

4.6K 3:2 Open Gate

Maximum image quality, maximum resolution, and maximum flexibility in postproduction for shooting with spherical and anamorphic lenses. The image area is larger than traditional Super 35 film, so not all Super 35 lenses cover. The sensor mode with the highest data rate.

License

Active Image Area (Photo sites)
4608 x 3164
Active Image Area (Dimensions)
28.0 x 19.2 mm / 1.102 x 0.756"
Image Circle Ø
33.9 mm / 1.337"

Recording Resolutions	
ARRIRAW:	4.6K (4608 x 3164)
ARRICORE:	4.6K (4608 x 3164)
ProRes:	4.6K (4608 x 3164)

4.6K 16:9

Full sensor width in a 16:9 format that suits many spherical Super 35 and all large format lenses, with extra room for flexibility in postproduction. Lower data rate than 4.6K 3.2 Open Gate.

License

Active Image Area (Photo sites)	**Recording Resolutions**	
4608 x 2592		
Active Image Area (Dimensions)	ARRIRAW:	4.6K (4608 x 2592)
28.0 x 15,7 mm / 1.102 x 0.618"	ARRICORE:	4.6K (4608 x 2592)
Image Circle Ø	ProRes:	4.6K (4608 x 2592)
32.1 mm / 1.264"		

4K 16:9

For projects using spherical lenses for a 16:9 or 1.85:1 deliverable with a 4K Cine resolution (4096 horizontal pixels). Also useful for spherical 16:9 or 1.85:1 projects with a UHD deliverable that want a little extra area for resizing, repositioning, stabilizing, or tracking in postproduction. The sensor area is close to the traditional spherical Super 35 film format for compatibility with a wide range of Super 35 lenses.

Active Image Area (Photo sites)	**Recording Resolutions**	
4096 x 2304		
Active Image Area (Dimensions)	ARRIRAW:	4K (4096 x 2304)
24.9 x 14.0 mm / 0.980 x 0.551"	ARRICORE:	4K (4096 x 2304)
Image Circle Ø	ProRes:	4K (4096 x 2304) UHD (3840 x 2160) 2K (2048 x 1152) HD (1920 x 1080)
28.6 mm / 1.125"		

3.8K 16:9

For projects using spherical lenses for a 16:9 UHD deliverable. This is the 4K recording format with the lowest data rate for lowest cost and with the smallest image circle for maximum compatibility with spherical Super 35 lenses.

Active Image Area (Photo sites)	**Recording Resolutions**	
3840 x 2160		
Active Image Area (Dimensions)	ARRIRAW:	UHD (3840 x 2160)
23.3 x 13.1 mm / 0,918" x 0.516"	ARRICORE:	UHD (3840 x 2160)
Image Circle Ø	ProRes:	UHD (3840 x 2160)
26.8 mm / 1.054"		

3.8K 2.39:1

For projects using spherical lenses for a 2.39:1 deliverable. Also, the highest maximum frame rate of any 3.8K sensor mode.

Active Image Area (Photo sites)	**Recording Resolutions**	
3840 x 1608		
Active Image Area (Dimensions)	ARRIRAW:	3.8K (3840 x 1608)
23.3 x 9.8 mm / 0,918" x 0.386"	ARRICORE:	3.8K (3840 x 1608)
Image Circle Ø	ProRes:	3.8K (3840 x 1608)
25.3 mm / 0.998"		

3.3K 6:5

For projects using 2x anamorphic Super 35 lenses for a 2.39:1 deliverable. Negates the necessity of cropping Open Gate footage and fulfills 4K mandates.

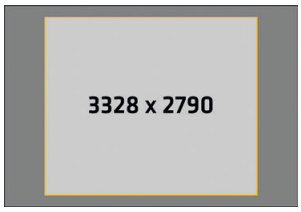

License

Active Image Area (Photo sites)	**Recording Resolutions**	
3328 x 2790		
Active Image Area (Dimensions)	ARRIRAW:	3.3K (3328 x 2790)
20.2 x 16.9 mm / 0.796 x 0.693"	ARRICORE:	3.3K (3328 x 2790)
Image Circle Ø	ProRes:	3.3K (3328 x 2790)
26.4 mm / 1.039"		3.8K 2.39:1 Ana. 2x (3840 x 1608)

2K 16:9 S16

For maximum frame rates with Sensor Overdrive on and off. Sometimes used to have extra padding around an HD deliverable. Close to the traditional Super 16 film format and therefore most Super 16 lenses cover.

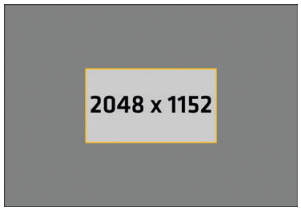

Active Image Area (Photo sites)	**Recording Resolutions**	
2048 x 1152		
Active Image Area (Dimensions)	ARRIRAW:	2K (2048 x 1152)
12.4 x 7.0 mm / 0.490 x 0.276"	ARRICORE:	2K (2048 x 1152)
Image Circle Ø	ProRes:	2K (2048 x 1152)
14.2 mm / 0.561"		

HD 16:9 S16

Same maximum frame rate as 2K 16:9 but native HD. For shooting HD without any cropping/resizing in post. Also used for live applications.

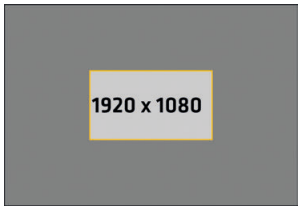

Active Image Area (Photo sites)	**Recording Resolutions**	
1920 x 1080		
Active Image Area (Dimensions)	ARRIRAW:	HD (1920 x 1080)
11.7 x 6.6 mm / 0.461 x 0.260"	ARRICORE:	HD (1920 x 1080)
Image Circle Ø	ProRes:	HD (1920 x 1080)
13.43 mm / 0.528"		

11.4 To Start Recording

The camera supports various ways to start and stop recording. You can start and stop recording by

- The *REC* button on the camera body, the MVF-2 and ARRI hand units like the WCU-4 and Hi-5
- The Camera Companion App
- The Remote Switch RS-4, connected to the camera's RS connector.
- Through WiFi / Ethernet, using the Web Remote or applications communicating via CAP (Camera Access Protocol)

User button *Record Start/Stop* starts and stops recording.

You can assign user buttons to applicable accessories like the ARRI Master Grips, the Operator Control Unit OCU-1 and the General Purpose I/O Box.

Starting recording returns the MVF-2 as well as the side display to their HOME screen and de-activates access to sensor fps, timecode, auto white balance, erase media, playback, and most menu settings.

11.5 Pre-recording

Pre-recording temporarily stores image data in an internal ring buffer instead of writing it directly to the recording medium. When regular recording starts, the buffered frames are added to the beginning of the clip. This allows unexpected events to be captured without the need to record continuously, avoiding unnecessarily long clips and excessive use of storage space. The maximum pre-recording duration depends on the selected combination of sensor frame rate, recording codec, and sensor mode, but can also be manually adjusted within these limits.

NOTICE

Pre-recording is a licensed feature. For more information, see section "Licensing [▸ 100]".

You can start and stop pre-recording only with a user button given the pre-recording function.

➤ Select *MENU* > *User Buttons* and give *Prerecording* to the correct button.

➤ Push the user button to start pre-recording.

➤ Push the user button again to stop pre-recording or push the *REC* button to start regular recording.

NOTICE

- When ending pre-recording, the ring buffer is cleared.
- While pre-recording is active, you do, like regular recording, not have access to most settings. This includes options like sensor frame rate, media erase, etc.

To Set the Pre-recording Duration

➤ Select *MENU* > *Recording* > *Prerecording max. Duration* and set the maximum duration (seconds) used for pre-recording.

Maximum Pre-recording Duration by Sensor Mode, Recording Resolution and Codec

Sensor Mode	Recording Resolution	Recording Codec	Max. Pre-recording Duration @24fps	
			ALEXA 35	ALEXA 35 Xtreme*
4.6K 3:2 Open Gate	4.6K (4608 x 3164)	ARRICORE	-	16 s
		ARRIRAW	2.8 s	14 s
		ProRes 422 HQ	8.5 s	48 s
		ProRes 4444	5.6 s	31 s
		ProRes 4444 XQ	3.6 s	20 s
4.6K 16:9	4.6K (4608 x 2592)	ARRICORE	-	20 s
		ARRIRAW	3.5 s	17 s
		ProRes 422 HQ	12 s	59 s
		ProRes 4444	8.8 s	39 s
		ProRes 4444 XQ	5.8 s	25 s
4K 16:9	4K (4096 x 2304)	ARRICORE	-	24 s
		ARRIRAW	4.6 s	22 s
		ProRes 422 HQ	12 s	75 s
		ProRes 4444	8.8 s	49 s
		ProRes 4444 XQ	5.8 s	32 s
4K 2:1	4K (4096 x 2048)	ARRIRAW	5.2 s	-
		ProRes 422 HQ	14 s	-
		ProRes 4444	9.8 s	-
		ProRes 4444 XQ	6.5 s	-
3.8K 16:9	UHD (3840 x 2160)	ARRICORE	-	29 s
		ARRIRAW	5.3 s	25 s
		ProRes 422 HQ	14 s	85 s
		ProRes 4444	9.9 s	56 s
		ProRes 4444 XQ	6.6 s	37 s
3.8K 2.39:1	3.8K (3840 x 1608)	ARRICORE	-	39 s
		ARRIRAW	-	35 s
		ProRes 422 HQ	-	115 s
		ProRes 4444	-	76 s
		ProRes 4444 XQ	-	50 s
3.3K 6:5	3.3K (3328 x 2790)	ARRICORE	-	25 s
		ARRIRAW	4.7 s	23 s
		ProRes 422 HQ	12 s	76 s
		ProRes 4444	8.9 s	50 s
		ProRes 4444 XQ	5.9 s	33 s
3K 1:1	3K (3072 x 3072)	ARRIRAW	4.6 s	-
		ProRes 422 HQ	12 s	-
		ProRes 4444	8.8 s	-
		ProRes 4444 XQ	5.8 s	-
2.7K 8:9	UHD 16:9 Ana 2x	ProRes 422 HQ	14 s	-
		ProRes 4444	9.9 s	-
		ProRes 4444 XQ	6.6 s	-
2K 16:9 S16	2K (2048 x 1152)	ARRICORE	-	100 s
		ARRIRAW	-	92 s
		ProRes 422 HQ	20 s	300 s
		ProRes 4444	20 s	201 s
		ProRes 4444 XQ	20 s	134 s
HD 16:9 S16	HD (1920 x 1080)	ARRICORE	-	117 s
		ARRIRAW	-	105 s
		ProRes 422 HQ	-	300 s
		ProRes 4444	-	229 s
		ProRes 4444 XQ	-	152 s

*without audio recording

11.6 Clip Naming Scheme

Camera Index	Two characters (A–Z or _), user-assignable. Should correspond to the camera unit being used. Example: A_ for camera A, B_ for Camera B, etc. *MENU > Recording > Project Settings > Camera Index*
Reel Counter	Four-digit number (0001–9999). Automatically increments for each new recording medium. Manual changes should only be made in special cases (e.g., after swapping the camera body during a shoot). *MENU > Recording > Project Settings > Next Reel Count*
Clip Counter	Fixed prefix C followed by a three-digit number (001–400). Automatically increases with each recorded clip. The 400-clip limit is a system-defined maximum per reel.
Date	Current system date (YYMMDD), separated from the other naming components by an underscore. *MENU > System > System Time + Date*
Time	Current system time (HHMMSS), separated from the other naming components by an underscore. *MENU > System > System Time + Date*
Codec Identifier	One character that identifies the codec used: p = Apple ProRes, a = ARRIRAW, c = ARRICORE
Camera ID	Camera serial number encoded in 4-character Base 36 (0–9, A–Z). Example: 12RJ = decimal serial number 50239.
File Extension	All clips are saved in the .mxf format (MXF wrapper).

For more information on the Camera Index and the Next Reel Count please see section "Project Settings [▸ 40]".

11.7 Audio Recording

The camera supports to record up to 4 channels of linear PCM audio (24 bit, 48 kHz).

Line Inputs

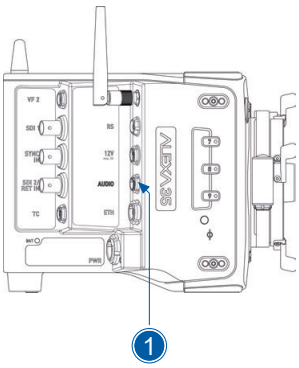

The AUDIO connector (1) is on the right side of the camera. It is a two channel +24 dBu line level audio input with additional 12 V DC power output to supply microphone preamplifiers. This is the same 6pin connector used on the ARRI ALEXA Mini LF. Use the ARRI ALEXA Mini LF Audio connector with cable (K2.0023988) to connect audio sources.

MIC Inputs

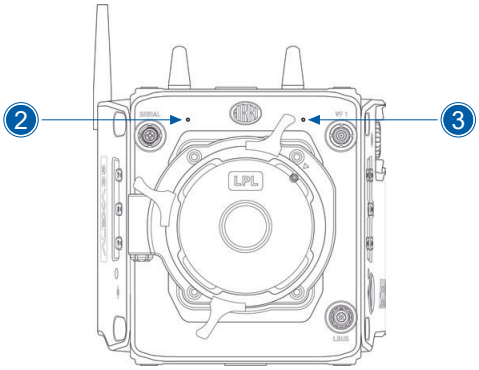

The dual gain internal microphones (2 = Internal Mic R, 3 = Internal Mic L, seen from operator point of view) are at the camera front. You can use them to record a reference track, sometimes called a “scratch track”. Some software tools can synchronize the master sound with the image by using the reference track. The gain of the internal microphones is fixed, with the left microphone (3) having a gain of +18 dB and the right microphone (2) a gain of 0 dB, to cover a wide audio level range.

AEM-1 Audio Inputs

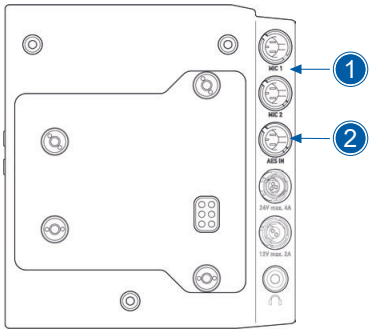

The optional Audio Extension Module AEM-1 supports the use of either two balanced Mic / Line inputs (1) with switchable +48 V phantom power, or one AES3 input (2). It is mounted to the rear interface of the camera. For more information, please refer to the user manual of the module.

Audio Outputs

Active audio channels are embedded with a 1 to 1 channel mapping in the SDI stream and output through the headphone output of the MVF-2.

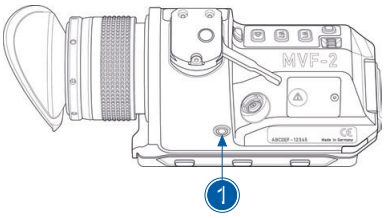

The headphones out connector (1) on the MVF-2 is a 3.5 mm TRS connector (headphone jack). It outputs all four audio channels with a maximum power of 2.5 dBm. The camera's headphone routing allows to configure which channels are output on the connector.

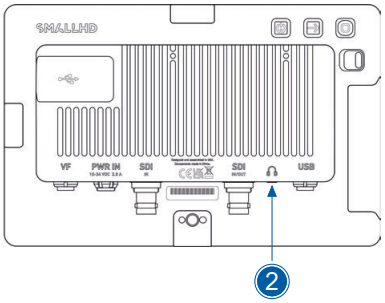

The headphones out connector (2) on the CCM-1 is a 3.5 mm TRS connector (headphone jack). It outputs all four audio channels with a maximum power of 2.5 dBm. The camera's headphone routing allows to configure which channels are output on the connector.

To Start Audio Recording

➤ Select *MENU* > *Recording* > *Audio Recording* > *Audio Recording* to start / stop audio recording.

Active audio recording is indicated through the audio meters shown on the HOME screen and in the Status Info. The meters show the current level of the channel signal in dBFS. Audio recording is temporarily de-activated if the frame rate of the sensor does not match the frame rate of the project.

Channel Routing

➤ Select *MENU* > *Recording* > *Audio Recording* > *Channel 1/2/3/4 Source* to set the input source for each channel.

Available options:

Line In L	The left channel of the camera's AUDIO input is assigned to the channel.
Line In R	The right channel of the camera's AUDIO input is assigned to the channel.
AEM-1 L	The left channel from the Audio Extension Module AEM-1 is assigned to the channel.
AEM-1 R	The right channel from the Audio Extension Module AEM-1 is assigned to the channel.
Internal Mic L	The left internal microphone is assigned to the channel. This microphone uses a fixed gain of +18dB.
Internal Mic R	The right internal microphone is assigned to the channel. This microphone uses a fixed gain of 0dB.
	An icon on the HOME screen and in the Status Info indicates active internal microphones.
	The icon is crossed out when the internal microphones are de-activated (muted).

To Set the Channel Control

➤ Select *MENU* > *Recording* > *Audio Recording* > *Channel 1/2/3/4 Control*

to set the gain control for each channel which has *Line In L* or *Line In R* assigned as source.

Available options:

Manual Gain	Manual adjustment of the input signal gain on the channel to reach a correct level.
Manual Gain + Limiter	A limiter prevents the signal from clipping if the input signal level combined with the set gain results in signal levels exceeding -6 dBFS.
Auto Gain	Matches a 0 dBu input signal to -6 dBFS. This setting leaves enough headroom for recording and avoids audio clipping. Audio levels cannot be adjusted by the user.

Headphones Routing and Headphones Volume

➤ Select *MENU* > *Recording* > *Audio Recording* > *VF Headphone Routing* > *Channel 1/2/3/4*

to configure the routing of audio channels to the headphones.

Available options:

Off	The audio channel is not output on the headphones.
L	The audio channel is output on headphones left.
L + R	The audio channel is output on headphones left and right.
R	The audio channel is output on headphones right.

➤ Select *MENU* > *Recording* > *Audio Recording* > *VF Headphone Volume* to adjust the volume of the headphones connected to the MVF-2.

Gain Adjustment

➤ Select *MENU* > *Recording* > *Audio Recording* > *Gain Levels*

to adjust the gain in steps of 1.0 dB for each channel which has *Line In L* or *Line In R* assigned as source.

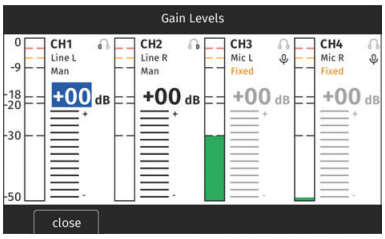

Turn the jog wheel or use the touch slider to set the gain of the first channel. Then push the jog wheel to move to the next channel or tap a channel to select it. Channels whose gain is not adjustable are skipped and shown as “fixed”. The blue cursor indicates the selected channel.

Push the *CLOSE* button to save the changes and exit the screen.

NOTICE

- Gain adjustment is not available for channels which use Auto Gain control.
- Gain adjustment is not available for channels to which the internal microphones or the Audio Extension Module AEM-1 are assigned as source. The internal microphones use a fixed, non-adjustable gain. The gain of the signals applied to the AEM-1 shall be set on the AEM-1 itself.

Reference Tone

A 1 kHz sine reference tone can be output on the SDI outputs and the headphone outputs of the MVF-2 and the AEM-1. If a recording is started during this time, the test tone is also recorded in all active audio channels of the clip.

➤ Select *MENU* > *Recording* > *Audio Recording* > *Reference Tone*.

Available options:

Off	*-9 dBFS*	*-18 dBFS*	*-20 dBFS*

NOTICE

The reference tone can only be activated when audio recording is active.

User Buttons *Audio Ch1 Increase / Decrease* and *Audio Ch 1+2 Increase / Decrease* adjust gain of channels 1 and 2.

User Buttons *Audio Ch1 Increase / Decrease* and *Audio Ch2 Increase / Decrease* adjust gain of channels 1 and 2.

User Button *Audio Mute int. Mic* de-activates the internal microphones.

User Button *Audio Solo* allows each channel to be monitored individually while the other channels are de-activated.

11.8 Rec Beeper

➤ Select *MENU* > *Recording* > *Rec Beeper*.

Available options:

Rec Start Beeper	The camera gives an acoustic indication at start of recording.
Rec Stop Beeper	The camera gives an acoustic indication at stop of recording.
Media Full Beeper	The camera gives an acoustic indication for stopping recording due to full recording medium. For better distinction, a different sound pattern than the start / stop beeper is used.

12 Playback

In-camera playback plays back the clips on the recording media at their project frame rate and is output to EVF, Monitor, SDI 1, and SDI 2. You can control playback from different locations such as the MVF-2, the camera's side display, the Web Remote, the Camera Companion App or hand units like the Hi5.

Playback Control through the MVF-2

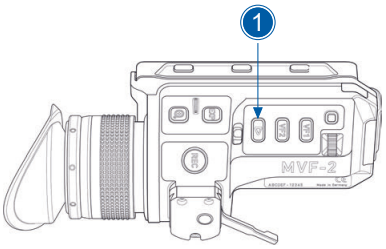

➢ Push and hold the *PLAY* button (1) of the MVF-2 for one second to start playback.

➢ Toggle between play and pause by briefly pushing the *PLAY* button (1).

➢ To exit playback, push and hold the *PLAY* button (1) for one second.

The playback screen of the MVF-2 has the following controls:

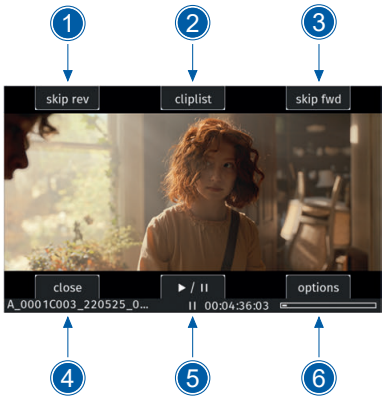

1	*Skip Reverse*	Loads the previous clip from the cliplist.
2	*Cliplist*	Select another clip for playback from a list of all clips on the recording medium.
3	*Skip Forward*	Loads the next clip from the cliplist.
4	*Close*	Exits playback.
5	*Play / Pause*	Toggles between play and pause.
6	*Options*	Allows setting the clip end action.

Push the *PLAY* button (1) on the MVF-2 or the jog wheel to toggle play / pause. While playback is paused, turn the jog wheel to scroll through the clip frame by frame. During playback, you can use the jog wheel to increase or decrease the playback speed by up to 512x forward or rearward.

The cliplist lists all clips contained on the recording medium:

➢ Start Playback and select CLIPLIST.

➢ Turn the jog wheel to select a clip:

- The first frame of the selected clip is shown on all monitoring outputs for preview. The clip's properties are shown in the info panel on the right:
- Codec, Recording Resolution, Record FPS, Texture, Look and Look Intensity, start TC and clip duration.
- Look and Look Intensity are shown in gray if the look the clip was recorded with does not correspond to the currently set look.

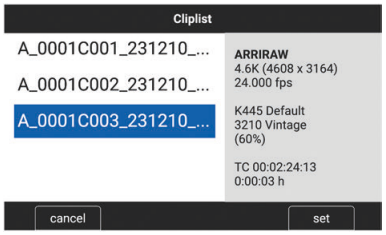

➢ Push the jog wheel or the *SET* button to play the clip.

➢ Push the *CANCEL* button to return to the playback screen.

NOTICE

Clips may be grayed out if they cannot be played back because their recording resolution is not compatible with the currently set recording resolution.

The Play End Mode defines the behavior when playback reaches the end of a clip.

➢ Select *PLAY* > *Options*.

Available options:

Pause on end	Playback pauses at the end of the clip.
Pause on start	Playback pauses at the beginning of the clip.
Loop	Playback continues from the beginning of the same clip again.
Play next clip	Playback continues with the next clip in the cliplist.
Exit playback	Camera exits playback.

Playback Control through the Side Display

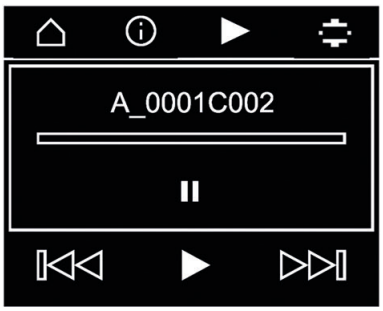

➢ Navigate to the playback page and push the side display jog wheel to enter playback.

➢ Toggle between play and pause by briefly pushing the side display jog wheel.

➢ While playing back, turn the side display jog wheel to increase or decrease the playback speed by up to 512x forward or backward.

➢ While playback is paused, turn the side display jog wheel to switch between the controls (skip back, play/pause, skip forward, navigation bar).
To exit playback, turn the side display jog wheel clockwise until the navigation bar is highlighted. Then push the side display jog wheel to exit playback mode.

User Button *Playback* starts and exits playback.

User Button *Check Last Clip* plays the last five seconds of the last recorded clip.

NOTICE

Playback does not apply the Look file that is stored in the clip metadata. Instead, the currently set Look file is used during playback.

HFR SDI Play Mode

When you use the HFR SDI output mode (see "SDI Settings [▸ 84]"), you can select how recorded HFR clips are played back. Depending on the selected mode, playback can keep the HFR SDI output configuration used during recording or be converted to the project frame rate for immediate slow-motion playback.

➢ Select *PLAY* > *Options* > *HFR SDI Play Mode*

Available options:

Sensor Rate	Plays back the clip at its recorded frame rate. The camera keeps the HFR SDI output configuration used during recording.
Project Rate	Plays back the clip at the project frame rate. SDI outputs return to their standard operating mode, equivalent to normal playback outside of HFR recording.

ALEXA35 Xtreme / Live

HFR SDI is a licensed feature.

13 Monitoring

13.1 Surround View

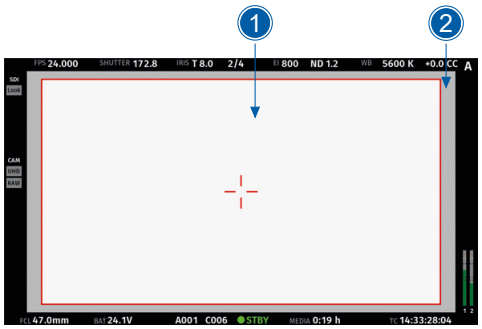

Surround View displays additional pixels outside the captured image area (1). It allows the operator to see outside the captured image and keep unwanted objects like microphone booms, out of the shot. The Surround View area (2) is separated from the captured image area by the Surround Mask (here: 75% Mask). To view only the captured image, you can de-activate Surround View.

➤ Select *MENU* > *Monitoring* > *VF* > *Surround View* to configure Surround View for the VF outputs (EVF and Monitor).

➤ Select *MENU* > *Monitoring* > *SDI* > *SDI 1 Processing* > *Surround View* to configure Surround View for the SDI 1 output.

➤ Select *MENU* > *Monitoring* > *SDI* > *SDI 2 Processing* > *Surround View* to configure Surround View for the SDI 2 output.

Available options:

On	The captured image area is shown with Surround View.
Off	The captured image area is shown without Surround View.
Off + Colored Line	The captured image area is shown without Surround View, outlined by a colored line (same color as frame lines).

User Buttons *VF Surround View*, *SDI 1 Surround View,* and *SDI 2 Surround View* set the surround view of the related output.

NOTICE

Surround View is not available for recording resolution resolutions 4.6K 3:2 Open Gate - 4.6K 16:9 as there are no more extra photo sites on the sensor.

Surround Mask

The Surround Mask visually separates the Surround View area from the captured image area.

➤ Select *MENU* > *Monitoring* > *VF* > *EVF Surround Mask* to configure Surround Mask for the EVF.

➤ Select *MENU* > *Monitoring* > *VF* > *Monitor Surround Mask* to configure Surround Mask for the Monitor.

➤ Select *MENU* > *Monitoring* > *SDI* > *SDI 1 Processing* > *Surround Mask* to configure Surround Mask for the SDI 1 output.

➤ Select *MENU* > *Monitoring* > *SDI* > *SDI 2 Processing* > *Surround Mask* to configure Surround Mask for the SDI 2 output.

Available options:

Black Line	A black line separates the Surround Mask.
Colored Line	A colored line (same color as frame lines) separates the Surround Mask is.
25% Mask	The Surround Mask has no line and 25% opacity.
50% Mask	The Surround Mask has no line and 50% opacity.
75% Mask	The Surround Mask has no line and 75% opacity.
100% Mask	The Surround Mask has no line and 100% opacity.

NOTICE

- The Monitor Surround Mask does not support 25% Mask and 75% Mask.
- When setting the frame lines outside shading for a monitoring output, the Surround Mask of the corresponding output is automatically adjusted.

13.2 Magnification

When you shoot with frame lines or aspect ratios that only use a cropped area of a sensor mode, the actual image content defined by the frame line might not be displayed large enough. The magnification setting gives you access to a variable scaling of the monitoring outputs. It sets a persistent image magnification, so the area defined by the frame line is shown as large as desired. You can adjust magnification in steps of 1% from 100% to 200% for the VF and the SDI outputs, individually or globally.

Two screen grabs from an ALEXA 35 in sensor mode 4.6K 3:2 Open Gate with a custom 16:9 4K frame line (red rectangle) applied. The left screen shot shows the SDI 1 output without magnification applied. The right screen grab shows the SDI 1 output with magnification applied to enlarge the image (in this example set to 130%).

➢ Select *MENU* > *Monitoring* > *Master Magnification* to set the magnification level for the VF outputs and the SDI outputs simultaneously.

- When individual outputs have been set to different magnification values, the Master Magnification menu entry shows “-”. Changing the Master Magnification will force the magnification of all outputs to the new value.

➢ Select *MENU* > *Monitoring* > *VF* > *Magnification* to set the magnification level for the EVF and the Monitor.

➢ Select *MENU* > *Monitoring* > *SDI* > *SDI 1 Processing* > *Magnification* to set the magnification level for the SDI 1 output.

➢ Select *MENU* > *Monitoring* > *SDI* > *SDI 2 Processing* > *Magnification* to set the magnification level for the SDI 2 output.

The magnification icon on the left side of the Status Info indicates where the recorded area exceeds the image shown:

Indication that the recorded image content horizontally (left and right) extends beyond what is visible on the output.

Indication that the recorded image content vertically (above and below) extends beyond what is visible on the output.

Indication that the recorded image content horizontally and vertically extends beyond what is visible on the output.

NOTICE

- Magnification can only be applied on the SDI output(s) with *SDI Image* set to *Processed*.
- Magnification is not available when using 2K or HD Recording Resolutions.
- Magnification is reset to 100% when Sensor Mode is changed.
- Magnification is not available when the SDI output(s) are configured for UHD output (6G and 12G formats).

13.3 Frame Lines

The camera can show frame lines overlaid over the live image to support framing. Frame lines can be considered electronic versions of ground glass markings in film cameras. You can configure which frame line the camera should show and how it should be shown (color and opacity). You can also configure up to two user rectangles which allow you to mark a rectangular area on the image, e.g. for marking an area that you need to keep clear during shooting for later VFX insertion. You can make custom frame lines with the online Frame Line & Lens Illumination Tool. A standard set of frame lines for different aspect ratios is provided in the camera. The availability depends on the selected sensor mode.

To Set the Frame Line

➢ Select *MENU* > *Monitoring* > *Frame Lines* > *Frame Line*.

➢ Select a frame line from the list or add a custom frame line from an inserted USB-C medium or the defaults list.

NOTICE

Use of Frame Lines Made with the Frame Line & Lens Illumination Tool

When using the Frame Line & Lens Illumination Tool to make frame lines, please obey:

- The sensor mode set in the tool shall correspond to the camera sensor mode in which the frame lines are to be used (e.g. when you make frame lines for the 2K 16:9 sensor mode, set the tool to 2K 16:9).
- Make the frame lines in the Frame Line & Lens Illumination Tool. You can make frame lines with any aspect ratio. It is important that the sensor mode in the tool corresponds to the sensor mode in which the frame lines are to be used in the camera.
- Store the frame line file on a USB-C medium.
- Set the correct sensor mode in the camera.
- Import the custom frame lines into the camera.
- If the sensor mode differs, the camera shows a warning message. The file will not be imported.

To Set the Center Mark

As already common for ground glasses for film cameras, the camera offers to show a center mark on each monitoring output.

➢ Select *MENU* > *Monitoring* > *VF* > *EVF Overlays* > *Center Mark* to configure the center mark for the EVF.

➢ Select *MENU* > *Monitoring* > *VF* > *Monitor Overlays* > *Center Mark* to configure the center mark for the Monitor.

➢ Select *MENU* > *Monitoring* > *SDI* > *SDI 1 Processing* > *Overlays* to configure the center mark for the SDI 1 output.

➢ Select *MENU* > *Monitoring* > *SDI* > *SDI 2 Processing* > *Overlays* to configure the center mark for the SDI 2 output.

Available options:

Off	Center mark is hidden.
Dot	Center mark is shown as a dot.
Dot Small	Center mark is shown as a small dot.
Cross	Center mark is shown as a cross.
Cross Small	Center mark is shown as a small cross.

Application of Frame Lines and Center Mark on Monitoring Outputs

For each monitoring output you can show or hide the frame lines and the center mark.

➢ Select *MENU* > *Monitoring* > *VF* > *EVF Overlays* > *Frame Lines* to toggle visibility of frame lines and center mark on the EVF.

➤ Select *MENU* > *Monitoring* > *VF* > *Monitor Overlays* > *Frame Lines* to toggle visibility of frame lines and center mark on the Monitor.

➤ Select *MENU* > *Monitoring* > *SDI* > *SDI 1 Processing* > *Overlays* > *Frame Lines* to toggle visibility of frame lines and center mark on the SDI 1 output.

➤ Select *MENU* > *Monitoring* > *SDI* > *SDI 2 Processing* > *Overlays* > *Frame Lines* to toggle visibility of frame lines and center mark on the SDI 2 output.

User Buttons *VF Frame Lines*, *SDI 1 Frame Lines*, *SDI 2 Frame Lines* show / hide frame lines for the related output.

Frame Line Display

When you make custom frame lines with the ARRI Frame Line & Lens Illumination Tool, you can place up to three different frame lines (A, B, C) in one frame line file. As the camera does not always have to show all three frame lines at the same time, you can configure which frame line(s) are shown. You can switch between or combine these frame lines without having to load a new frame line file each time.

➤ Select *MENU* > *Monitoring* > *Frame Lines* > *Frame Line Display*

Available options:

Frame Line A	Show / hide frame line A of the set frame line file.
Frame Line B	Show / hide frame line B of the set frame line file.
Frame Line C	Show / hide frame line C of the set frame line file.

Frame Line Color

The Frame Line Color setting defines the color of the frame line(s), the Center Mark, the User Rectangle(s) and the Surround Mask (if Surround Mask is set to Colored Line).

➤ Select *MENU* > *Monitoring* > *Frame Lines* > *Frame Line Color*.

Available options:

Red	*Green*	*Blue*	*Cyan*	*Magenta*	*Yellow*	*Black*	*White*

Frame Line Opacity

The Frame Line Opacity setting defines the opacity of the frame line(s), the center mark, the user rectangle(s) and the surround mask (if surround mask is set to Colored Line).

➤ Select *MENU* > *Monitoring* > *Frame Lines* > *Frame Line Opacity*

➤ Set the frame line opacity in a range from *1* (the lowest opacity) to *4* (the highest opacity).

Outside Shading

The Outside Shading setting defines the shading of the area between the frame line(s) and the remaining captured image area. You can set it independently for each image output. When you change the Outside Shading of an output, the output's Surround Mask is adapted accordingly.

➤ Select *MENU* > *Monitoring* > *Frame Lines* > *Outside Shading*.

Available options:

EVF Outside Shading	Set Outside Shading for the EVF (Off, 25%, 50%, 75%, 100%).
Monitor Outside Shading	Set Outside Shading for the Monitor (Off, 50%, 100%).
SDI 1 Outside Shading	Set Outside Shading for the SDI 1 output (Off, 25%, 50%, 75%, 100%).
SDI 2 Outside Shading	Set Outside Shading for the SDI 2 output (Off, 25%, 50%, 75%, 100%).

User Rectangles

To help in framing, the camera can show two custom user rectangle overlays. You can configure width, height and offset (position from left and top of image area).

➤ Select *MENU* > *Monitoring* > *Frame Lines* > *User Rectangles* > *User Rectangles*.

Available options:

Off	Show no User Rectangles.
Rectangle 1	Show only User Rectangle 1.
Rectangle 2	Show only User Rectangle 2.
Rectangle 1 + 2	Show User Rectangles 1 + 2.

➤ Select *MENU* > *Monitoring* > *Frame Lines* > *User Rectangles* > *User Rectangle 1* or User Rectangle 2.

Available options:

Width	Set User Rectangle width in the range of *0-999*.
Height	Set User Rectangle height in the range of *0-999*.
Offset Left	Set horizontal User Rectangle offset in the range of *0-1000*.
Offset Top	Set vertical User Rectangle offset in the range of *0-1000*.
Reset All	Resets all values.

13.4 False Color

Red	1/3 stop below clipping
Yellow	2/3 stops below clipping
Pink	1 stop above 18% middle gray
Green	18% middle gray
Blue	Edge of shadow detail
Purple	Noise floor

False Color is an exposure tool to check for correct exposure. When active, the image is turned into a gray scale image with important luminance ranges shown in signal colors. Activating False Color temporarily switches the corresponding output to LogC4 and replaces luminance with the colors shown in the adjacent figure.

When a gray card is used (or another object in the scene has a similar reflectance level), you can set the exposure show the grey card in the green zone (18% middle gray). The LogC4 image from which the grayscale image is derived is the LogC4 image prior to any application of ASC CDL or any look file.

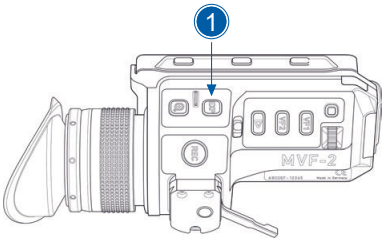

To activate False Color on both EVF and Monitor, push the *EXP* button (1) on the MVF-2. Push the *EXP* button (1) again to de-activate False Color.

User Buttons *VF False Color*, *SDI 1 False Color* and *SDI 2 False Color* activate / de-activate False Color on the corresponding outputs.

You can also activate False Color in the camera menu:

➤ Select *MENU* > *Monitoring* > *SDI* > *SDI 1 Processing* > *False Color* to activate False Color on the SDI 1 output.

➤ Select *MENU* > *Monitoring* > *SDI* > *SDI 2 Processing* > *False Color* to activate False Color on the SDI 2 output.

Active False Color is indicated by the exposure tool icon in the Status Info of the respective output.

13.5 Peaking

This feature highlights in-focus areas for better focus control.

NOTICE

Peaking is not supported on SDI 2.

Peaking Mode

➤ Select *MENU* > *Monitoring* > *Peaking* > *VF Peaking Mode* to set the preferred peaking mode for EVF and Monitor.

➤ Select *MENU* > *Monitoring* > *Peaking* > *SDI 1 Peaking Mode* to set the preferred peaking mode for SDI 1.

➤ Select *MENU* > *Monitoring* > *Peaking* > *SDI Peaking Mode* to set the preferred peaking mode for the SDI outputs.

Available options:

Color	Color peaking overlays in-focus areas with a selected color.
Aperture	Aperture peaking enhances object edges only.

Peaking Level

➤ Select *MENU* > *Monitoring* > *Peaking* > *VF Peaking Level* to set the peaking strength for EVF and Monitor.

➤ Select *MENU* > *Monitoring* > *Peaking* > *SDI 1 Peaking Level* to set the peaking strength for SDI 1.

➤ Set the peaking level from *1* (the minimum strength) to *20* (the maximum strength).

Offset Shift

The peaking offset shift sets the threshold for Color Peaking to become active, relative to the peaking level.

➤ Select *MENU* > *Monitoring* > *Peaking* > *VF Peaking Offset Shift* to set the peaking offset for EVF and Monitor.

➤ Select *MENU* > *Monitoring* > *Peaking* > *SDI 1 Peaking Offset Shift* to set the peaking offset for SDI 1.

➤ Set the offset shift from *-5* (the minimum) to *+5* (the maximum).

Color

Select the color for Color Peaking.

➤ Select *MENU* > *Monitoring* > *Peaking* > *VF Peaking Color* to set the color for color peaking on EVF and Monitor.

➤ Select *MENU* > *Monitoring* > *Peaking* > *SDI 1 Peaking Color* to set the color for color peaking on SDI 1.

Available options:

Red	*Green*	*Blue*	*Cyan*	*Magenta*	*Yellow*	*White*

To Activate Peaking

User Buttons *VF Peaking* and *SDI 1 Peaking* activate / de-activate peaking on the related output.

PEAK Active peaking is indicated through the peaking icon shown in the Status Info of the related output.

13.6 Zoom

The Zoom function magnifies the live image to make it easier to judge and adjust focus. The enlarged view shows a pixel-to-pixel representation of the image for precise inspection. The camera provides several zoom positions, enabling you to view different areas of the frame such as the center or corners. When Zoom is active, it is indicated by an orange frame around the image.

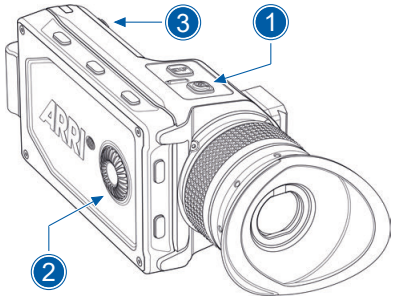

➢ Push the *ZOOM* button (1) on the MVF-2 to activate / de-activate Zoom on EVF and Monitor.

➢ While Zoom is active, rotate the jog wheel (2), the user wheel (3), or push the soft buttons on the MVF-2 flip out Monitor (if the Monitor is flipped out and set to show the live image) to change the zoom position. You cannot change the zoom position through the jog wheel or the user wheel when the Monitor is set to show the HOME screen or the camera menu.

When you use a CCM-1 monitor instead of an MVF-2 on the VF connector, you can assign viewfinder user buttons to the monitor's user buttons or the camera's user buttons:

User Button *VF Zoom* activates / de-activates zoom for EVF and Monitor.

User Button *VF Zoom Position* changes the Zoom position on the viewfinder output.

Zoom on SDI

You can activate Zoom on SDI outputs only through a user button.

User Button *SDI 1 Zoom* or *SDI 2 Zoom* activates / de-activates Zoom on the related SDI output.

User Button *SDI 1 Zoom Position* or *SDI 2 Zoom Position* changes the Zoom position on the related SDI output.

User Button *SDI 1 Zoom (Smart)* or *SDI 2 Zoom (Smart)* activates Zoom on the first button push, further button pushes change the zoom position, and a long button push de-activates Zoom.

NOTICE

If you use VF Zoom on the viewfinder path, it is de-activated when you start recording.

Tracking Zoom

ALEXA 35 Xtreme

Tracking Zoom extends the standard Zoom by adding intelligent subject tracking. Instead of fixed positions, Tracking Zoom automatically follows a selected person, keeping them centered for easier focus evaluation and sharpness checking. You can activate Tracking Zoom only through a user button.

User Button *VF / SDI 1 / SDI 2 Tracking Zoom* activates / de-activates Tracking Zoom on the related output:

Short Push	Activates face detection on the selected output. You can detect up to five faces. Each face is marked with a bounding box. By default, boxes use corner markers. The selected face for tracking is highlighted with a solid outline. Face detection automatically deactivates after 7 seconds of inactivity.
Subsequent Short Pushes	Cycle through detected faces to select the desired person for tracking.
Long Push	Activates or de-activates Zoom. The operation is identical to the activation of the standard Zoom, except that Tracking Zoom automatically follows the selected face. While Tracking Zoom is active a reference map appears in the lower-left corner. It shows all detected faces and the position of the zoomed frame within the full image. A subsequent short push on the user button starts tracking the next detected person, causing the zoom to jump to their face.

If the tracked face is lost, the orange Zoom frame blinks to indicate user action is required. Push the user button long to de-activate the zoom, or push it short to select the face closest to the last known position of the lost face for tracking.

When you activate playback, Zoom is automatically de-activated. The user can push the *Tracking Zoom* buttons to activate face detection and zoom in during playback. This allows for precise checking of focus and sharpness on individual clips. The button interaction is identical to live monitoring: a short push toggles between detected faces, and a long push activates or de-activates Zoom.

Picture-in-Picture Tracking Zoom

ALEXA 35 Xtreme

Picture-in-Picture (PiP) Tracking Zoom works exactly like the Tracking Zoom. It automatically follows a selected person and keeps it centered in the frame to make it easier to focus and check for sharpness. Instead of switching the entire live image to a zoomed view, PiP Tracking Zoom keeps the full live image visible while simultaneously showing a zoomed section in a picture-in-picture overlay. This allows you to maintain a complete overview of the framing while checking the focus in detail. You can activate PiP Tracking Zoom only through a user button.

User Button *VF / SDI 1 / SDI 2 PiP Tracking Zoom* activates / de-activates PiP Tracking Zoom on the related output.

NOTICE

You can activate PiP Tracking Zoom only on one output (VF, SDI 1, SDFI 2).

Available options:

Short Push	Activates face detection on the selected output. You can detect up to five faces. Each face is marked with a bounding box. By default, boxes use corner markers. The selected face for tracking is highlighted with a solid outline. Face detection automatically deactivates after 5 seconds of inactivity.
Subsequent Short Pushes	Cycle through detected faces to select the desired person for tracking.
Long Push (<1.5 sec)	Activates or de-activates PiP Tracking Zoom. The operation is identical to the activation of the standard Zoom, except that PiP Tracking Zoom automatically follows the selected face. A subsequent short push on the user button starts tracking the next detected person, causing the zoom to jump to their face.
Long Push (>1.5 sec)	Activates PiP Zoom temporarily for as long as the user button is pushed.

You can adjust the size and position of the picture-in-picture overlay.

➤ Select *MENU* > *Monitoring* > *Zoom* > *PiP Zoom Size* to adjust the size of the overlay.

Available options:

Small	Medium	Large	Wide	Tall

➤ Select *MENU* > *Monitoring* > *Zoom* > *PiP Zoom Position* to set the position of the picture-in-picture overlay.

Available options:

Top Left	Top Right	Bottom Left	Bottom Right

If the tracked face is lost, the PiP Tracking Zoom frame blinks to indicate user action is required. Long press the user button to de-activate the zoom, or short press it to select the face closest to the last known position of the lost face for tracking.

When you activate playback, Zoom is automatically de-activated. The user can push the PiP Tracking Zoom buttons to activate face detection and zoom in during playback. This allows for precise checking of focus and sharpness on individual clips. The button interaction is identical to live monitoring: a short push toggles between detected faces, and a long push activates or de-activates Zoom.

NOTICE

Tracking Zoom and PiP Tracking Zoom exclusively track faces. Other objects or subjects are not recognized.

NOTICE

Please not for all three zoom types:

- The full area of the selected sensor mode is referenced. Any active magnification setting is ignored.
- Frame lines and anamorphic desqueeze are temporarily de-activated to provide an unobstructed view.
- When in-camera playback is started, the zoom is de-activated.
- Zoom is not available with 2K or HD recording resolutions.
- Only one Zoom type can be active at the same time. You cannot switch between them while one is active.

13.7 Shared Focus Marks and Overlay

The *Shared Focus Marks* feature allows you to create, show, and manage focus marks on both the camera and a connected Hi-5 handheld device. The focus marks are synchronized between the camera and the Hi-5. Marks created on one of the two devices are automatically available on the other device as well. The Focus Scale and Focus Mark require valid focus position data provided by supported lens metadata sources such as LDS, LDS-2, Cooke /i, or lens tables.

To use the Focus Marks, activate the focus scale in the EVF or SDI status info overlay.

➤ Select *MENU* > *Monitoring* > *VF* > *EVF Overlays* > *Status Components* > *Info Right* > *Focus Scale*
or

➤ *MENU* > *Monitoring* > *SDI* > *SDI1 Processing* > *Overlays* > *Status Components* > *Info Right* > *Focus Scale*
or

➤ *MENU* > *Monitoring* > *SDI* > *SDI2 Processing* > *Overlays* > *Status Components* > *Info Right* > *Focus Scale*

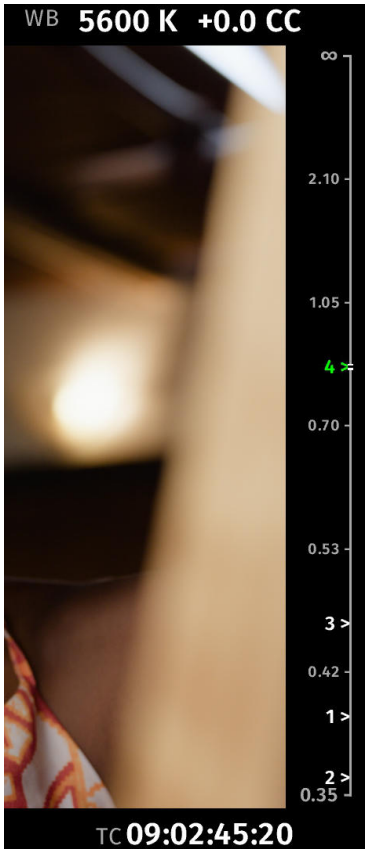

Focus Scale

You can show a focus scale for focus marks instead of the status icons and the audio meters.

The circular marker represents the current focus distance. Markers 1, 2, 3, and 4 indicate user-defined focus marks.

A focus mark is shown yellow, when the current focus distance falls within the depth of field range of that mark. The mark is shown green, when the current focus distance matches the mark position.

Continuous distance measurements from a distance measure device (e.g. a Focusbug Cine RT) are shown as a green triangle on the right side of the scale, consistent with the Hi-5 hand unit.

Static focus marks transmitted by the Cine RT system are shown in the same way as camera focus marks. The only difference is that the marker symbol (>) is shown green instead of white.

Show Background Scale

You can show or hide five distance reference values on the focus scale. The values are positioned at equal intervals across the scale and do not represent the distance markings on the lens barrel.

➤ Select *MENU* > *Monitoring* > *Focus Scale* > *Show Background Scale* to activate / de-activate the values.

Marker Type

You can select how focus marks are shown on the focus scale. Focus marks can be shown as numbered markers or by their corresponding distance values.

➤ Select *MENU* > *Monitoring* > *Focus Scale* > *Mark Display Type*

Available options:

Number Mark	Focus marks are shown as numbered markers.
Distance	Focus marks are shown by their distance value.

After activating the Focus Scale on the desired EVF or SDI output, assign the “Mark Focus” function to a camera user button (or use the marker button on a connected Hi-5).

To create a focus mark, set focus to the desired subject distance and push the assigned button.

A short push creates a focus mark at the current focus position. If the current focus position matches an existing focus mark, indicated by a green marker, a short push removes that mark. Push and hold the button removes all focus marks.

NOTICE

Focus marks are not stored in the camera User Setup.

13.8 SDI Settings

SDI Image

The setting for the SDI image determines whether the SDI image is output as a clean feed or including status information and status overlays.

➤ Select *MENU* > *Monitoring* > *SDI* > *SDI 1 Image*.

Available options:

Clean	The image is output as a clean feed. No status overlays, frame lines or surround view are shown. Magnification is not supported.
Processed	The image may include status information and overlays.

➤ Select *MENU* > *Monitoring* > *SDI* > *SDI 2 Image*.

Available options:

Clean	The image is output as a clean feed. No status overlays, frame lines or surround view are shown. Magnification is not supported.
Processed	Image may include status information and overlays.
Clone SDI 1	The SDI 2 output is automatically configured by the SDI 1 settings. The following SDI 1 settings are transferred to the SDI 2 output:

Format	Frame Rate	Image (clean / processed)
Surround View	Surround Mask	Magnification
Overlays	Frame Lines (on / off)	Center Mark
Status Info	Status Components	Overlay Brightness
Hide Messages	Outside Shading	Processing (LogC4 / WVO LogC4 / Look)
Color Space	3G Level	

SDI Format

➤ *Select MENU > Monitoring > SDI > SDI 1 Format to set the format of the SDI 1 output.*

➤ *Select MENU > Monitoring > SDI > SDI 2 Format to set the format of the SDI 2 output.*

Available options:

422 1.5G HD	Images are output according to SMPTE 292M. Available frame rates are 23.976p/psf, 24p/psf, 25p/psf, 29.97p/psf and 30p/psf p (progressive) transmits images line by line starting at the top left pixel. psf (progressive segmented frame) splits progressive images into fields (odd lines and even lines) and transmits these (all odd before all even) line by line.
422 3G HD	Images are output according to SMPTE ST 424:2012. Available frame rates are 48p, 50p, 59.94p and 60p.
444 3G HD	Images are output according to SMPTE ST 424:2012. Available frame rates are 23.976p, 24p, 25p, 29.97p and 30p.
422 6G UHD	Images are output according to SMPTE ST 2081-10:2015. Available frame rates are 23.976p, 24p, 25p, 29.97p and 30p. Available for SDI 2 only and not available when using LF 16:9 HD or LF 16:9 2K recording resolution.
422 12G UHD	Images are output according to SMPTE ST 2048-1.

	Available frame rates are 48p, 50p, 59.94p and 60p.
444 12G UHD	Images are output according to SMPTE 2082-10:2015.
	Available frame rates are 23.976p, 24p, 25p, 29.97p and 30p.

NOTICE

- 48p may not be supported by some SDI devices, as this is not a defined frame rate according to the SMPTE standard.
- 6G / 12G formats are not available when the recording resolution is set to 2K or HD.

SDI Frame Rate

The SDI frame rate determines the number of images that are output per second on the SDI output(s). It should be set equal to the sensor frame rate. If the frame rate is lower than the sensor frame rate, frame drops will occur. If it is higher, duplicate images will be output. The available SDI frame rates depend on the selected SDI format.

➤ Select *MENU* > *Monitoring* > *SDI* > *SDI 1 Frame Rate* to set the frame rate of the SDI 1 output.

➤ Select *MENU* > *Monitoring* > *SDI* > *SDI 2 Frame Rate* to set the frame rate of the SDI 2 output.

SDI 3G Level

For the 3G SDI formats, you can choose if you use 3G level A or B. Refer to the instructions of your connected devices to decide which 3G level to use.

➤ Select *MENU* > *Monitoring* > *SDI* > *SDI 1 3G Level* to set the 3G level for the SDI 1 output.

➤ Select *MENU* > *Monitoring* > *SDI* > *SDI 2 3G Level* to set the 3G level for the SDI 2 output.

Hide Messages

User messages shown as overlays on the monitoring outputs are primarily relevant for the camera team and do not necessarily need to be shown on the SDI output that other crew members see. The camera offers the possibility to hide all user messages on a selected SDI output.

➤ Select *MENU* > *Monitoring* > *SDI* > *SDI 1 Processing* > *Hide Messages* to hide user messages on the SDI 1 output.

➤ Select *MENU* > *Monitoring* > *SDI* > *SDI 2 Processing* > *Hide Messages* to hide user messages on the SDI 2 output.

High Frame Rate SDI

ALEXA 35 Xtreme

With the High Frame Rate SDI feature (HFR SDI), the camera supports high-speed image transmission through its two 12G SDI outputs. It supports both HD-based subframe packing and native UHD output. Depending on the set sensor mode and the selected sensor frame rate, either one (SDI 1) or both SDI outputs are used for this purpose.

The transmission is based on a standard 12G-SDI physical layer that complies with SMPTE ST 2082-10. It follows the principles of multi-stream transport derived from SMPTE ST 2082-30:2017 Mode 2. HD formats comply with SMPTE ST 274 and SMPTE ST 425-1 Level A (1920×1080, 4:2:2, 10-bit).

You shall meet certain conditions to use HFR SDI:

- Set the Sensor Mode and Recording Resolution to a 16:9 aspect ratio:
  4K 16:9 - UHD (3840x2160)
  4K 16:9 - HD (1920x1080)
  3.8K 16:9 - UHD (3840x2160)
  HD 16:9 S16 - HD (1920x1080)
- Set the Project Rate to 50p, 59.94p or 60p

➤ Select *MENU* > *Monitoring* > *SDI* > *HFR SDI* to activate HFR SDI.

Available options:

Off 2x 3x 4x 5x 6x 7x 8x

The factor represents a multiple of the set project rate. For example, if the project rate is 60p, a factor of 4x results in a sensor frame rate and SDI transmission of 240 fps. The availability of individual factors depends on the selected sensor mode, project rate, recording codec, and active sensor overdrive:

Sensor Mode / Recording Resolution	Recording Codec	Sensor Overdrive	Project Rate	Available Factors
4K 16:9 - UHD (3840x2160)	Apple ProRes	n/a	50p, 59.94p, 60p	2x
4K 16:9 - HD (1920x1080)	Apple ProRes	n/a	59.94p, 60p	2x
		n/a	50p	2x, 3x
3.8K 16:9 - UHD (3840x2160)	Apple ProRes ARRIRAW ARRICORE	n/a	50p, 59.94p, 60p	2x
HD 16:9 S16 - HD (1920x1080)	Apple ProRes ARRIRAW	n/a	59.94p, 60p	2x, 3x, 4x, 5x
			50p	2x, 3x, 4x, 5x, 6x
	ARRICORE	Off	59.94p, 60p	2x, 3x, 4x, 5x
			50p	2x, 3x, 4x, 5x, 6x
		On	59.94p, 60p	6x, 7x, 8x
			50p	7x, 8x

High Frame Rate SDI is a licensed feature. Refer to section "Licensing [▶ 100]" for details.

NOTICE

When HFR SDI is active, access to the following settings is blocked:

- Sensor Frame Rate & Sensor Overdrive
- Sensor Mode & Recording Resolution
- Project Frame Rate
- SDI 1 & 2 Settings
- You cannot use SDI 2 Return In if you have selected a setting combination that requires video output through SDI 2

13.9 EVF and Flip-out Monitor Settings

EVF Brightness

You can adjust the brightness of the EVF to 120, 200 and 300 (Nits).

➤ Select *MENU* > *Monitoring* > *VF* > *Settings* > *EVF Brightness* to set the brightness of the viewfinder OLED between *120*, *200* or *300*.

NOTICE

When VF Processing is configured for Look (EVF: HDR, Mon: SDR), the EVF brightness is fixed to 500 nits and cannot be changed.

EVF Lifted Black

EVF Lifted Black improves image performance when working in dark or low-light environments by slightly raising the black levels in the image.

➤ Select *MENU* > *Monitoring* > *VF* > *Settings* > *EVF Lifted Black* to activate / de-activate EVF Lifted Black.

LIFT Active EVF Lifted Black is indicated through an icon in the EVF Status Info.

User Button *VF Lifted Black* activates / de-activates EVF Lifted Black.

EVF Power

➤ Select *MENU* > *Monitoring* > *VF* > *Settings* > *EVF Power*.

Available options:

Auto	Depending on the MVF-2 proximity sensor state, the EVF display is activated and de-activated automatically. This is the default setting.
Off	De-activates the EVF display permanently. It remains de-activated even when the proximity sensor is covered e.g. by a rain cover.
On	Use this setting to override the MVF-2 proximity sensor and to constantly enable the EVF display. This setting should be regarded as an emergency setting to be used, for example, when the proximity sensor is faulty and no longer activates the EVF display anymore.

NOTICE

A permanently activated EVF OLED may cause irreversible burn-ins on the EVF OLED, if used for long periods. With the setting “On”, the camera will issue a corresponding warning after each boot-up and sensor mode switch.

EVF Eyepiece Heating

The MVF-2 viewfinder has a built-in eyepiece heater to prevent fogging of the eyepiece when shooting in cold environments. The eyepiece heater becomes active when the eyepiece has a temperature of 15° C / 59° F or below. In very cold environments please use the Heated Eyecup HE-7.

➤ Select *MENU* > *Monitoring* > *VF* > *Settings* > *EVF Eyepiece Heating* to activate / de-activate EVF eyepiece heating.

Active eyepiece heating is indicated through an icon shown on the HOME screen. The icon is shown gray if eyepiece heating is inactive.

EVF Image Rotation 180°

When you mount the MVF-2 on the right side of the camera, you can rotate the EVF image by 180° for correct orientation.

➤ Select *MENU* > *Monitoring* > *VF* > *Settings* > *EVF Image Rotation 180°* to activate / de-activate the rotation.

Monitor Brightness

➤ Select *MENU* > *Monitoring* > *VF* > *Settings* > *Monitor Brightness*

to adjust the brightness of the MVF-2 flip-out monitor from *1* (the minimum brightness) to *10* (the maximum brightness).

Monitor Flip Mode

➤ Select *MENU* > *Monitoring* > *VF* > *Settings* > *Monitor Flip Mode*.

Available options:

Auto	Flips the Monitor image automatically depending on the monitor's orientation. This is the default setting.
Normal	Ignores the Monitor's orientation sensor and shows the Monitor image in normal orientation.
Flipped	Ignores the Monitor's orientation sensor and shows the monitor image in flipped orientation (upside down).

User Button *Flip Monitor* sets the Monitor flip mode.

13.10 Return In

You can use the SDI 2 output of the camera as a Return In input to feed 1.5G or 3G SDI signals into the camera and show them on the EVF and flip-out monitor and / or the SDI 1 output.

➤ Select *MENU* > *Monitoring* > *Return In* > *Use SDI 2 as Return In* to configure the SDI 2 output to function as an image input.

➤ Select *MENU* > *Monitoring* > *Return In* > *Show Return In on VF* to show the return in image on the EVF and the Monitor.

➤ Select *MENU* > *Monitoring* > *Return In* > *Show Return In on SDI 1* to show the return in image on the SDI 1 output.

NOTICE

SDI 2 related settings cannot be adjusted while SDI 2 is configured to function as return in.

To Activate Return In

You can activate / de-activate Return In only through a user button.

➤ Select *MENU* > *User Buttons* and give *Return In* to the correct button.

➤ Push the user button to activate / de-activate Return In.

13.11 SDI Color Bars

The camera can output SMPTE color bars on the SDI outputs. The color bars are a 10-bit signal according to SMPTE RP 219-2002. Color bars will always bypass the ARRI Look File ALF-4. As these are SDR color bars, set the SDI color space to either Rec 709 (SDR) or Rec 2020 (SDR) for correct display.

➤ Select *MENU* > *Monitoring* > *SDI Color Bars* to activate / de-activate color bars.

NOTICE

SDI color bars are de-activated when recording is started.

User Button *SDI Color Bars* activates / de-activates color bars on the SDI outputs.

14 User Buttons

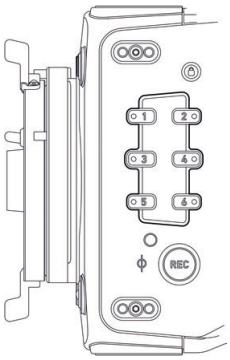

The camera has nine user buttons, 1-6 on the left and 7-9 on the camera right side. The MVF-2 has two user buttons, VF 1 and VF 2. You can give each button different functions.

After you gave a button a function, push the button to trigger the function. The blue LED on the button reflects the functional status.

In addition to the user buttons of the camera and the MVF-2, the camera supports to give functions to the user buttons of electronic accessories like the hand units HI-5 and WCU-4, ARRI Master Grips, Operator Control Unit OCU-1 and the GPIO box.

Some user button functions support smart behavior. For these, a short push triggers the function, while a long push activates the function only temporarily, if the user button is pushed.

➤ Select *MENU* > *User Buttons* >

Camera User Buttons	to give functions to the camera user buttons (1-9).
MVF-2 User Buttons	to give functions to the MVF-2 user buttons (VF 1 & VF 2).
Monitor User Buttons	to give functions to the user buttons on the CCM-1 (1-4).
Hand Unit User Buttons	to give functions to the user buttons of HI-5 and WCU-4 (1-6).
LBUS Device User Buttons	to give functions to the user buttons of ECS devices like the ARRI Master Grips and the OCU-1 (1-12).
GPIO User Buttons	to give functions to the user buttons of the GPIO Box (1-14).
Lens User Buttons	to give functions to ENG and box lens buttons.

Available user button functions:

Off	De-activates the user button.
VF, SDI 1, SDI 2 Status Info	Switches Status Info between *Safe*, *Off* and *Overlay* on the chosen output.
VF, SDI 1, SDI 2 Check LogC4	Switches the processing of the chosen output between the currently set value and LogC4. Supports smart behavior.
VF Check HDR	Switches the EVF processing between the currently set value and HDR. Supports smart behavior.
VF Desqueeze	Activates / de-activates Anamorphic Desqueeze on the VF Outputs.
VF, SDI 1, SDI 2 False Color	Activates / de-activates the False Color exposure tool on the chosen output. Supports smart behavior.
VF, SDI 1, SDI 2 Frame Lines	Activates / de-activates the frame lines on the chosen output. Supports smart behavior.
VF Lifted Black	Activates / de-activates EVF Lifted Black. Supports smart behavior.
VF, SDI 1 Peaking	Activates / de-activates Peaking on the chosen output. Supports smart behavior.
VF Processing	Switches VF Processing between *LogC4*, *Look (SDR)* and *Look (EVF: HDR, Mon: SDR)*.
VF, SDI 1, SDI 2 Surround View	Switches Surround View between *On*, *Off* and *Off + Colored Line* on the chosen output.
VF, SDI 1, SDI 2 Zoom	Activates / de-activates Zoom on the chosen output.
VF, SDI 1, SDI 2 Zoom Position	Switches the zoom position.
VF, SDI 1, SDI 2 Tracking Zoom	Activate / de-activate Tracking Zoom on the chosen output. Short Push: Activates face detection on the selected output.

	Subsequent Short Pushes: Cycle through detected faces to select the desired person for tracking.
	Long Push: Activates / de-activates Tracking Zoom.
VF, SDI 1, SDI 2 PiP Tracking Zoom	Activate / de-activate PiP Tracking Zoom on the chosen output.
	Short Push: Activates face detection on the selected output.
	Subsequent Short Pushes: Cycle through detected faces to select the desired person for tracking.
	Long Push (<1.5 sec): Activates / de-activates PiP Tracking Zoom.
	Long Push (>1.5 sec): Activates PiP Zoom temporarily for as long as the user button is pushed.
SDI Color Bars	Activates / de-activates SDI color bars.
EI Increase	Increases the exposure index to the next higher value in the list.
EI Decrease	Decreases the exposure index to the next lower value in the list.
FPS Increase	Sets the sensor frame rate to the next higher value in the list.
FPS Decrease	Sets the sensor frame rate to the next lower value in the list.
FPS Preset	Sets the sensor frame rate to a user defined value.
ND Increase	Sets the ND filter to the next higher value in the list.
ND Decrease	Sets the ND filter to the next lower value in the list.
Shutter Increase	Sets the shutter to the next higher value in the list.
Shutter Decrease	Sets the shutter to the next lower value in the list.
WB Increase	Sets the white balance to the next higher value in the list.
WB Decrease	Sets the white balance to the next lower value in the list.
Audio Ch1 Increase	Increases gain of audio channel 1 in 1dB steps.
Audio Ch1 Decrease	Decreases gain of audio channel 1 in 1dB steps.
Audio Ch2 Increase	Increases gain of audio channel 2 in 1dB steps.
Audio Ch2 Decrease	Decreases gain of audio channel 2 in 1dB steps (requires channel control set either to *Manual* or *Manual (+L)*).
Audio Mute int. Mic	De-activates / activates the internal microphones.
Audio Solo	De-activates all audio recording channels except one. Toggles through Off, Ch1, Ch2, Ch3, Ch4, selecting the next channel with every button push. Channels that are not given an audio input are skipped. When Audio Solo is active, the selected channel is marked in the audio bars shown in the status info and the home screen. Audio Solo only affects the headphones output (not the embedded audio in the SDI stream).
Auto WB	First button push activates the auto white balance overlay, push the button again within one second to execute auto white balance.
Calibrate Lens Motors	Push and hold for 3 sec to start the calibration of all connected lens motors. Push while calibrating to stop calibration.
Check Last Clip	Plays the last five seconds of the last recorded clip, then playback is exited.
EF Close Iris	Closes the iris of an EF lens.
EF Open Iris	Opens the iris of an EF lens. Short button push closes / opens by 1/x stop (step size depending on lens), long button push closes / opens by 1 stop.
Flip Monitor	Switches the flip-out monitor between normal and flipped mode. To return to automatic flip mode, push and hold button for two seconds.
Frame Grab	Grabs a LogC4 still frame in .JPG and .DPX format and saves it to the USB medium. Frame grabs are taken from the SDI image path (including SDI settings such as processing, active look and anamorphic desqueeze) but cropped to the active image area. The frame grab resolution depends on the SDI format and the applied SDI settings.

	Active frame grab is indicated though the grab icon displayed on the HOME screen as well as the Status Info. The icon turns orange when the frame grab could not be saved.
Hand Unit Nudge	Sends a nudge / cue to all connected Hi-5 hand units (hand unit vibrates).
Mark Focus	Create and manage static Focus Marks. Push button to create a Focus Mark at the current focus distance. Push again when the lens is set to the distance of an existing Focus Mark to delete that mark. Push and hold to delete all Focus Marks.
Mirror Image	Switches Mirror Image between *Off*, *V*, *H* and *V+H*.
Playback	Push button and hold to start playback, then push to toggle play/pause, push, and hold again to exit playback.
Prerecording	Starts and stops pre-recording.
Record Start/Stop	Starts and stops recording.
Return In	Activates / de-activates the return in signal present at the SDI 2 connector. Supports smart behavior.
WiFi Power	Activates / de-activates WiFi power.
RT1	Replicates the RT1 button of the LPS-1 Fiber Camera Adapter (only available when the Fiber Camera Adapter is connected). Supports smart behavior.
RT2	Replicates the RT2 button of the LPS-1 Fiber Camera Adapter (only available when the Fiber Camera Adapter is connected). Supports smart behavior.
ENG	Replicates the ENG button of the LPS-1 Fiber Camera Adapter and activates the intercom for the production channel (only available when the Fiber Camera Adapter is connected). Supports smart behavior.
PRD	Replicates the PRD button of the LPS-1 Fiber Camera Adapter and activates the intercom for the production channel (only available when the Fiber Camera Adapter is connected). Supports smart behavior.
CALL	Replicates the CALL button of the LPS-1 Fiber Camera Adapter and activates the CALL function. Supports smart behavior.
LPM-1 Return In	Switches the Live Production Monitor LPM-1 image input between Live image (fed through CxP or SDI IN) and Return In.

15 Synchronization

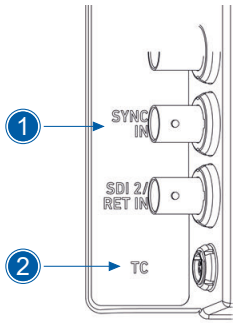

You can synchronize the camera's sensor and SDI outputs to a genlock signal (a tri-level HD signal or an analog black burst signal) from the BNC SYNC IN connector (1) or a timecode signal from the LEMO 5pin TC connector (2). The camera's sensor frame rate shall operate at the same frame rate or a multiple thereof (up to 8x) as the reference signal to make synchronization sure.

➤ Select *MENU* > *System* > *Sensor* > *Genlock Sync*.

Available options:

Off	Synchronization is de-activated.
Sync In	The camera synchronizes to a tri-level or black burst signal from the SYNC IN connector.
Timecode	The camera synchronizes to timecode signal from the TC connector.

GEN GEN Active synchronization is indicated by the Genlock icon on the HOME screen and in the Status Info. The icon turns orange when the camera cannot synchronize to the reference signal or when no signal is present. See *MENU* > *Alerts* for detailed information.

NOTICE

Simultaneous use of the timecode mode *Jam-sync* and *Genlock Sync* is not supported.

Sync Shift

You can use the Sync Shift setting to apply an offset to the reference signal at the input. The minimum step size is 52 ns and the maximum correction is +/- 20 ms, depending on the sensor frame rate.

➤ Select *MENU* > *System* > *Sensor* > *Sync Shift* to adjust the sync shift.

16 Sensor Settings

16.1 To Mirror the Sensor Image

You can mirror the sensor image in horizontal and vertical directions.

Horizontal mirroring is applied on all monitoring paths and internally recorded material. Vertical mirroring is only applied to the monitoring outputs. Internally recorded material is not vertically flipped, but the information is written into metadata.

➤ Select *MENU* > *Image* > *Mirror Image*.

Available options:

Off	Mirroring is de-activated.
V	The sensor image is vertically mirrored.
H	The sensor image is horizontally mirrored.
V + H	The sensor image is vertically and horizontally mirrored (rotated by 180°).

User Button *Mirror Image* scrolls through the Mirror Image options.

16.2 User Pixel Masking

All sensors have a certain number of defective pixels. ARRI cameras have three methods to catch and correct them:

- The static pixel correction based on a pixel mask created during manufacturing.
- The dynamic pixel correction continuously evaluates each frame and masks defective pixels that are not caught by the static pixel mask.
- In very few cases, we have observed some defective pixels that are not corrected by the first two methods. For those cases the third method, User Pixel masking, is available. You can create User Pixel masks with the ARRI Reference Tool (ART).

When shooting ARRIRAW, it is not necessary to load the User Pixel Mask into the camera. As an alternative, you can apply to the ARRIRAW files in postproduction with the ARRI Reference Tool or any third-party software that has implemented the User Pixel Mask feature through the ARRI Image SDK.

The User Pixel Mask will remain intact after a factory reset and after a camera software update. You can manually remove or overwrite it with a new one at any time.

➤ Select *MENU* > *System* > *Sensor* > *User Pixel Masking*.

Install User Pixel Mask	Select to install a User Pixel Mask from a USB-C medium.
Export User Pixel Mask	Select to back up the currently installed User Pixel Mask on a USB-C medium.
Delete User Pixel Mask	Select to uninstall a User Pixel Mask.
Grab Raw Image	Stores an ARRIRAW frame grab on a USB-C medium.

User Pixel Mask Generation

➤ Insert a USB-C medium into camera.

➤ Select *MENU* > *System* > *Sensor* > *User Pixel Masking* > *Grab Raw Frame* to grab an ARRIRAW frame.

The ARRIRAW frame grab is stored on the USB-C medium in folder ARRI/ALEXA35/SENSOR. As an alternative, you can record a short ARRIRAW sequence and use that material for marking defective pixels.

➤ Import the ARRIRAW frame grab into the ARRI Reference Tool.

Use the ARRI Reference Tool to mark defective pixels. The marked pixel coordinates are stored in an XML file called the User Pixel Mask. Please note that we recommend marking the least number of pixels necessary, as too many marked pixels can be counterproductive.

Please refer to the ARRI Reference Tool user manual for further information.

➢ Save the User Pixel Mask to the USB-C medium in folder ARRI/ALEXA35/SENSOR.

➢ Insert the USB-C medium into the camera.

➢ Select *MENU* > *System* > *Sensor* > *User Pixel Masking* > *Install User Pixel Mask* to load the mask into the camera.

After a restart of the camera, the marked pixels will be masked using information from surrounding pixels. This masking is applied to the images delivered from the sensor before any other processing takes place. It becomes active on all outputs.

➢ Carefully check the result by visually inspecting the areas where you have marked pixels. If too many pixels are marked too close to each other, or if pixels are marked close to other pixels that are already marked in the static pixel mask, the result could be uncorrectable clusters, which are more visible than the original defect pixels.

As an added service, it is possible to send the User Pixel Mask to ARRI Service at service@arri.com for verification. We strongly recommend that you take advantage of this free service. Sometimes clusters are difficult to spot depending on the background. Please note that it is the responsibility of the person creating the User Pixel Mask to verify that no clusters are formed.

NOTICE

The User Pixel masking feature is only a temporary solution to mask defective pixels. Defective pixels should be dealt with by sensor calibration at ARRI service.

Recalibration verifies that the sensor is working within ARRI specifications. Defective pixels shall be thoroughly evaluated to compensate for them permanently and automatically.

17 System Settings

17.1 Language Setting

➤ Select *MENU* > *System* > *Language* to set the system language between *English* and *Chinese* (simplified).

17.2 System Time and Date

➤ Select *MENU* > *System* > *System Time + Date* to set the system time and date.

17.3 Button and Display Settings

Display Style

➤ Select *MENU* > *System* > *Buttons + Display* > *Display Style* to set the display style between Day or Night.

Button Brightness

➤ Select *MENU* > *System* > *Buttons + Display* > *Button Brightness* or
Select *Side Display* > *Settings* > *Button Brightness*.

to set the brightness of camera and MVF-2 buttons from *0* (off) to *4* (the highest brightness).

MVF-2 Touch

➤ Select *MENU* > *System* > *Buttons + Display* > *MVF-2 Touch* to activate / de-activate the touchscreen functionality on the MVF-2.

The touch lock icon on the HOME screen indicates that the touchscreen functionality is de-activated.

17.4 Fan Settings

Set the fan mode to Low Noise for locations with ambient temperatures up to 30 °C (86 °F). For locations with ambient temperatures higher than 30 °C (86 °F), set to Rec Low.

➤ Select *MENU* > *System* > *Fan Mode*.

Available options:

Rec Low	Increases fan speed during standby to cool the camera. Minimizes fan speed/noise during recording. Ideal in an environment warmer than 30 °C (86 °F).
Low Noise	Minimizes fan noise during standby and recording.

NOTICE

With data rates above 100 MB/s (due to fps/codec setting), the fan speed automatically increases to prevent the camera from overheating.

17.5 Reset of Electronic Horizon

➤ Select *MENU* > *System* > *Reset Electronic Horizon*.

➤ Place the camera on a level surface and push the *RESET* button.

NOTICE

A message is shown if the roll, the tilt or both values is more than the calibration range and resetting is not possible.

17.6 GPS Metadata

You can configure the SERIAL connector of the camera to support an NMEA 0183-compliant GPS module instead of a distance measure. The GPS data received (including longitude, latitude, and altitude) is then transmitted to the camera and embedded as dynamic metadata into every recorded video frame. To establish the connection, a custom cable is required that transmits the serial GPS data to the camera while simultaneously providing a 12 V power supply to the GPS module. You shall match the cable to the specific GPS module you use.

For the pin assignments of the SERIAL connector, please refer to section "Connector Pinouts [▸ 143]".

➤ Select *MENU* > *System* > *Use SERIAL for GPS Input* to switch the camera's SERIAL port for GPS usage.

The GPS icons on the HOME screen and in the right section of the Status Info indicate the GPS status:

GPS	GPS is locked. GPS is tracking 4+ satellites.
GPS LO	GPS low accuracy. Satellites are detected (1-3), but the signal strength is too low for a reliable position.
GPS ?	Searching for location.
GPS ×	GPS not detected or connected.

17.7 Update

NOTICE

Do an update only with a fully charged battery or a mains power supply to avoid power loss during updates.

Do not de-energize the camera or unplug power during update processes.

Do not disconnect or remove components that are being updated.

17.7.1 Update of Camera Software

The camera software is updated with a USB-C medium. The Software Update Package (SUP) updates the camera along with the MVF-2 and the lens mount if they are connected to the camera. Before you update the camera, create the required folder structure on a USB-C medium. For more information, see section "User Storage [▸ 31]".

Software Update Package Download

➤ Download the software update package (SUP) from the Software and Firmware Updates for Cameras section on the ARRI website.

➢ Double-click on the downloaded file (*.zip) to unpack it. The following files should be created:

- **Update file** (*.SUP)
- **Update file** (*.swu)
- **Update key** (*.lic)
- **Release notes**

➢ Carefully read the release notes.

➢ Copy the update file (*.swu) to folder ARRI/ALEXA35/SUP on the USB-C medium.

➢ Copy the update key (*.lic) to folder ARRI/ALEXA35/LICENSES on the USB-C medium.

Camera Update

➢ Connect the USB-C medium to the camera.

➢ If inserted, remove the recording media from the camera.

➢ Select *MENU* > *Setup* > *Factory Reset* to perform a factory reset.

➢ Select *MENU* > *System* > *Update* > *Update Camera*.

➢ Select the required update file and push the *CONFIRM* button to start the update.

➢ Check the MVF-2 monitor for the update progress.

➢ Wait for the update process to finish. The update procedure takes about ten minutes.

After a successful update and reboot, the camera shows a success message.

17.7.2 Update of Camera Components

The camera supports update of the MVF-2 viewfinder and the lens mount. The MVF-2 and the lens mount do not require a dedicated update file. The camera shows a message if the software version of MVF-2 and / or the lens mount does not match the version required by the currently installed camera software.

➢ Select *MENU* > *System* > *Update*.

The Update MVF-2 and Update Lens Mount entries show the software version installed on the component and the software version required by the currently installed camera software.

➢ Select *Update MVF-2* to update the MVF-2 or

➢ Select *Update Lens Mount* to update the lens mount.

➢ Push *CONFIRM* to start the update.

17.7.3 Update of LBUS Devices

The camera can update LBUS devices like cforce mini motors, cforce Plus motors, ARRI Master Grips, ARRI Operator Control Unit OCU-1 and ARRI LCUBE. The update requires an update file which can be downloaded from the ARRI website.

➢ Download the update file for the desired device from the Software Updates ECS section of the ARRI website.

➢ Copy the update file to a USB-C medium in folder ARRI/ECS/.

➢ Connect the USB-C medium to the camera.

➢ Connect the LBUS device to the LBUS connector of the camera or the lens mount.

➢ Select *MENU* > *System* > *Update* > *Update LBUS Devices*.

A list with the connected LBUS devices is shown. It shows the software version currently installed on the device and the software version stored on the USB-C medium.

➢ Select the LBUS device you want to update and push the *UPDATE* button.

➢ Push the *CONFIRM* button to start the update or the *BACK* button to abort and exit.

17.7.4 Update of Codex Compact Drive

The camera supports the update of Codex Compact Drives. The update does not require a dedicated update file. The camera shows a message if the firmware version of the inserted drive needs to be updated.

NOTICE

The update deletes all data on the Compact Drive. Make sure that you have backed up all data before you start the update.

➤ Select *MENU* > *System* > *Update*.

The Update Media entry shows the software version installed on the inserted Compact Drive, and the software version required by the currently installed camera software.

➤ Select *Update Media* to update the inserted Compact Drive.

➤ Push the *CONFIRM* button to start the update.

NOTICE

The camera shall be rebooted after the update to be able to record and resume normal operation. If you update more Compact Drives, no reboot is required between the updates. You can continue directly with the update of the next Compact Drive.

17.7.5 Update of PDM-1

The camera can update the Power Distribution Module PDM-1. The update does not require a dedicated update file. The camera shows a message if the PDM-1 needs to be updated.

➤ Select *MENU* > *System* > *Update*.

The Update PDM-1 entry shows the software version installed on the PDM-1, and the software version required by the currently installed camera software.

➤ Select *Update PDM-1* to update the PDM-1.

➤ Push the *CONFIRM* button to start the update.

17.8 Licensing

The Base model versions of the ARRI ALEXA 35 and ARRI ALEXA 35 Xtreme include a core set of features. You can expand them through temporary or permanent licenses. Both models support Apple ProRes recording up to 60 fps in 4K 16:9 and additional formats. The ARRI ALEXA 35 Xtreme includes ARRICORE recording as part of its standard feature set.

Core features also include support for ARRI Look Files (CDL and 3D LUT), Enhanced Sensitivity modes up to EI 6400, and three independent 10-bit monitoring outputs in both SDR and HDR color spaces. You can unlock additional functionality through temporary or permanent licenses. Users can tailor the camera's capabilities to the specific needs of each production.

The Premium model versions of the ARRI ALEXA 35 and ARRI ALEXA 35 Xtreme come with the full feature set pre-installed, eliminating the need for separate license activation.

All licenses are linked to the camera's serial number and can only be used with that device. Licenses are available for durations of seven days, 30 days, one year, or permanently, and can be purchased through the ARRI License Shop.

All licenses are securely stored in the License Shop and can be downloaded at any time. However, we recommend always keeping backup copies of your license files for your records.

➤ Select *MENU* > *System* > *Licenses* to view the license status of the camera.

To Retrieve a License File

Connect a USB-C medium to the camera.

➤ Select *Menu* > *System* > *Licenses* > *HW Info* or *Menu* > *Info* > *Export HW Info*.

➤ Push the *CONFIRM* button to export the HW Info file.

➤ The file is saved in the USB folder ARRI/ALEXA35/LICENSES named ALEXA35-HW-#####-YYMMDD-HHMM.json (##### = camera serial number)

➤ Go to the ARRI License Shop. Log in or register and proceed to purchase the license.

To Install a License File

➤ Copy the license file into the ARRI/ALEXA35/LICENSES folder on a USB-C medium.

➤ Connect the USB-C medium to the camera.

➤ Select *Menu* > *System* > *Licenses* > *Add* and select the license file to install.

➤ Restart the camera after installation to make the new features available.

License Overview

Highspeed	With the Highspeed License installed, the camera unlocks its full high frame rate capabilities. Users can access the maximum available frame rates for all recording formats supported by the camera.
ARRIRAW	The ARRIRAW License enables uncompressed and unencrypted ARRIRAW recording for all recording formats supported by the camera.
OpenGate/ Anamorphic	The Open Gate/Anamorphic License enables all the ARRI ALEXA 35 Open Gate and anamorphic recording formats (4.6K 3.2 Open Gate, 4.6K 16:9, 3.3K 6:5, 3K 1:1, and 2.7K 8:9), as well as anamorphic desqueeze for Apple ProRes recording and monitoring outputs.
Look	The Look License unlocks access to all available ARRI Textures, the ARRI Look Library featuring 87 unique looks, and Custom Color Management, allowing full control over the image processing pipeline.
Pre-recording	The Pre-recording License enables a buffer that continuously records images before the actual recording starts. When activated, the ARRI ALEXA 35 can store up to 20 seconds, and the ARRI ALEXA 35 Xtreme up to 5 minutes of pre-recorded footage. Once recording is triggered, the buffered content is automatically included at the beginning of the clip. This feature is especially useful for capturing unpredictable or spontaneous events.
Premium	The Premium License is a bundle package that includes all five of the individual feature licenses detailed above: Highspeed, ARRIRAW, Open Gate/Anamorphic, Look, and Pre-recording.
Cine Plus	Since the ARRI ALEXA 35 Live already comes with a Look license installed, the Cine Plus license is specifically designed to elevate an ARRI ALEXA 35 Live to the feature level of an ARRI ALEXA 35 Premium. The Cine Plus license includes all the features of the Premium license, except for the Look features.
High Frame Rate SDI	The High Frame Rate SDI license enables high-speed image transmission through SDI. It requires the Highspeed license to be installed. This is a feature exclusive for the ALEXA 35 Xtreme.

	Premium Model	Base Model	Highspeed License	ARRIRAW License	OG / Ang. License	Pre-recording License	Look License	Premium License	HFR SDI License
0.75 - 60 fps	✓	✓							
Apple ProRes Recording	✓	✓							
ARRICORE Recording	✓	✓							
Enhanced Sensitivity	✓	✓							
ARRI Color Management	✓	✓							
16:9 & 2:1 Sensor Modes	✓	✓							
ARRI Look File	✓	✓							
60 - Max. fps	✓		✓					✓	
ARRIRAW Recording	✓			✓				✓	
Open Gate Sensor Mode	✓				✓			✓	
Anamorphic Sensor Modes	✓				✓			✓	
Anamorphic Desqueeze	✓				✓			✓	
Pre-recording	✓					✓		✓	
ARRI Textures	✓						✓	✓	
ARRI Look Library	✓						✓	✓	
Custom Color Management	✓						✓	✓	
Highspeed through SDI									✓

Temporary Licenses

Temporary licenses are available for seven days, 30 days and one year. The remaining validity period is displayed on the camera's license screen, and the camera will tell the user before a license expires.

Once the license has expired, a subsequent notification will be shown. You can install multiple temporary licenses together to extend the total duration. Temporary licenses are sequentially numbered in the filename. When installing multiple temporary licenses, it is important to follow a consecutive installation order. Installing a license with a higher number before one with a lower number will invalidate the lower-numbered licenses if they have not been used yet.

In SUP 5.0.0, the camera does not provide a warning in such cases and will install the licenses as they are provided. Before you install a temporary license, make sure that the system date and time are correct, and that no internal battery issues are indicated after reboot.

18 Multicam

Access to the Multicam menu and all related settings depends on the presence of a Multicam license. If no valid Multicam license is installed, the menu will not be displayed, and the settings will not be available.

18.1 Live Painting

Live Painting, introduced with the ARRI ALEXA 35 Live, provides enhanced control for live production workflows. It builds on standard ASC CDL look adjustments by incorporating commonly used shading parameters such as Pedestal, Black Gamma, Lift, and Knee. You can adjust these parameters remotely using the ARRI Camera Access Protocol (CAP). CAP is an IP-based API that allows for remote camera control and monitoring over a network connection.

When Live Painting is active, the Display Rendering Transform (DRT) switches to the REVEAL Live DRT, which features a raised diffuse white point. This change aligns with ITU recommendations and the aesthetic requirements of live production, targeting a diffuse white level of 203 nits for HDR workflows. By comparison, the Cinematic REVEAL DRT targets 100 nits.

For productions requiring custom rendering, you can load ARRI Look Files with Custom Color Management (.ALF4c). These files override the internal DRT and allow full customization, including the option to apply the Cinematic REVEAL rendering.

A new shading parameter introduced with ARRI ALEXA 35 Live is Cinema Knee. This setting controls the degree of cinematic rendering applied to the image, acting as a blend between the Live REVEAL DRT and the Cinematic REVEAL DRT. It adjusts visual elements such as contrast, skin tone handling, highlight bleaching, and roll-off. This allows fine-tuning of cinematic characteristics in real time to suit specific production needs.

NOTICE

The Cinema Knee parameter is not available when an .ALF4c look file is loaded, as the look is already pre-defined. All other shading parameters remain available.

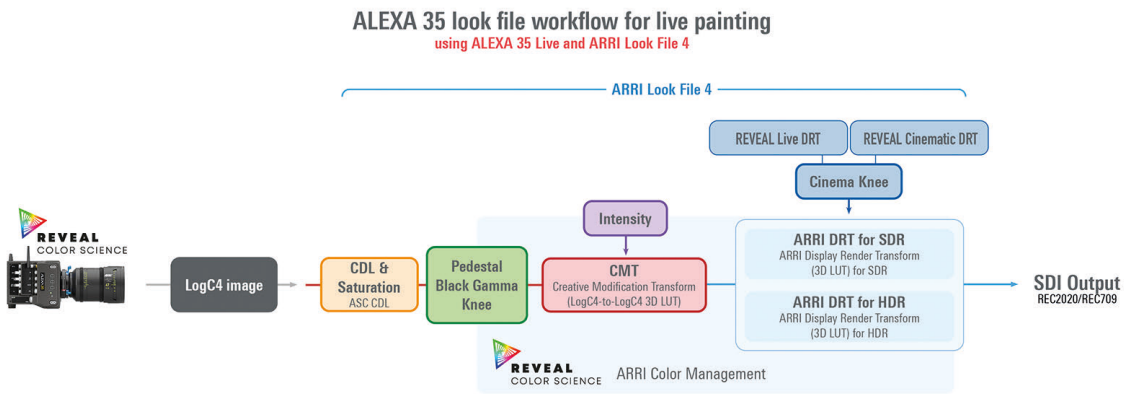

➤ Select *MENU* > *Multicam* > *Live Painting* to enable Live Painting.

You cannot apply Live Painting to the Default look. To use live painting, you shall load an editable look.

Live Painting supports the modification of the following shading parameters:

Type	Parameter	Default	Range
CDL	CDL.Slope.Master CDL.Slope.R CDL.Slope.G CDL.Slope.B	1.0	0.5 to 2.0
	CDL.Offset.Master CDL.Offset.R CDL.Offset.G CDL.Offset.B	0.0	-0.5 to 0.5
	CDL.Power.Master CDL.Power.R CDL.Power.G CDL.Power.B	1.0	0.5 to 2.0
	CDL.Saturation	1.0	0.0 to 2.0
Pedestal (Master Black)	MC.Pedestal.Master MC.Pedestal.R MC.Pedestal.G MC.Pedestal.B	0.0	-1.0 to 1.0
Black Gamma	MC.BlackGamma.Master MC.BlackGamma.R MC.BlackGamma.G MC.BlackGamma.B	0.0	-1.0 to 1.0
Lift	MC.Lift.Master MC.Lift.R MC.Lift.G MC.Lift.B	0.0	-1.0 to 1.0
RGB White	MC.WhiteGain.Master MC.WhiteGain.R MC.WhiteGain.G MC.WhiteGain.B	0.0	-1.0 to 1.0
Knee	MC.Knee	0.0	0.0 to 1.0
Cinema Knee	MC.CinemaKnee	1.0	0.0 to 1.0

18.2 Tally Settings

The tally setting determines the behavior of tally lights connected to the camera. These tally lights are, for example, the tally on the MVF-2, the Tally Light Module TLM-1, or the built-in tally of a box lens.

➤ Select *MENU* > *Multicam* > *Tally Settings* > *Tally*.

Available options:

Off	Tally is de-activated.
On (Recording)	The tally lights react to the camera's internal recording. While the camera is recording, the tally lights light up red. While the camera is not recording, they are off. The number display of the Tally Light Module TLM-1 shows the camera index.
On (Remote/CAP)	The tally lights react to tally commands sent via the Camera Access Protocol (CAP). The number display of the Tally Light Module TLM-1 shows the camera channel number as sent via Camera Access Protocol (CAP).

➤ Select *MENU* > *Multicam* > *Tally Settings* > *LPM-1 / TLM-1 Tally Brightness* to adjust the tally brightness of a connected Tally Light Module TLM-1 and Live Production Monitor LPM-1.

➤ Select *MENU* > *Multicam* > *Tally Settings* > *LPM-1 / TLM-1 Tally ID Brightness* to adjust the brightness of the number segment display of a connected Tally Light Module TLM-1 and Live Production Monitor LPM-1.

➤ Select *MENU* > *Multicam* > *Tally Settings* > *VF Tally Overlay* to activate / de-activate the tally overlay on the camera’s VF outputs. You can adjust the brightness of the overlays using the VF Overlay Brightness setting.

➤ Select *MENU* > *Mulicam* > *Tally Settings* > *Talent Tally Green Preview* to have the talent tally lights display red when a green tally signal is present.

➤ Select *MENU* > *Mulicam* > *Tally Settings* > *Talent Tally Yellow Preview* to have the talent tally lights display red when a yellow tally signal is present.

18.3 Restrict Local Camera Control

The setting to restrict local camera control grays out most of the settings in the menu of MVF-2, CCM-1, and the camera's side display. It is intended for use in live production environments where most of the camera's settings are controlled remotely. The camera operator can only change settings related to the viewfinder, for example, but not production-relevant settings. The menu of the camera's Web Remote is not affected by this setting.

➤ Select *MENU* > *Multicam* > *Restrict Local Camera Control* to activate / de-activate the restriction.

The active restriction is indicated by the settings locked icon on the HOME screen.

18.4 Exposure Compensation (Zoom)

With compatible ENG zooms and box lenses, the camera supports to automatically adjust the Exposure Index according to the zoom position / focal length to compensate for peripheral light loss. This ensures consistent brightness levels during zoom operations while maintaining the selected aperture and depth of field.

➤ Select *MENU* > *Multicam* > *Exposure Compensation (Zoom)* to activate the compensation.

You can only activate the compensation when a compatible lens is mounted on the camera. Otherwise the setting appears grayed out. The Exposure Index readings on the Home Screen and in the Status Info are shown in brackets if a compensation is applied.

19 User Setups

A user setup is a profile of the current settings of the camera. You can save the settings in the camera and / or to a USB-C medium. You can give user setups custom names, save them to the USB-C medium, and load them on multiple cameras. Rather than resetting the camera to its factory default settings, a user setup resets the camera to a user's default settings.

User setups ensure that cameras on multi camera shoots have matching settings. You can transfer a show's setup onto daily cameras to ensure they carry the same shooting specifications.

To Save a User Setup

You can save the current setup configuration in the camera or to a USB-C medium.

➤ Select *MENU* > *Setup* > *User Setups Installed* > *Save* to save the setup in the camera, or

➤ Select *MENU* > *Setup* > *User Setups on USB* > *Save* to save the setup on a USB-C medium.

➤ Use the onscreen keyboard to enter a name for the user setup and push the *SAVE* button.

A screen is shown to select the setup parameter blocks with following options:

General	Groups the general camera configuration and basic project settings.
Format	Saves set codec, sensor mode and recording resolution.
Scene	Saves scene related parameters such as Shutter and Exposure Index.
Lens	Saves active lens table setting to quickly change between lens configurations.
User	Stores all parameters for camera personalization (overlays etc.).

➤ Select one or more options and push the *CONFIRM* button.

To Load a User Setup

➤ Select *MENU* > *Setup* > *User Setups Installed* to load a setup from the camera, or

➤ Select *MENU* > *Setup* > *User Setups on USB* to load a setup from the USB-C medium.

➤ Select a user setup from the list and push the *LOAD* button.

A pop-up window with the parameter blocks of this user setup is shown.

➤ Push the *CONFIRM* button.

The camera loads the selected user setup and shows a result message. The pop-up highlights the parameters that you should check in case certain parameters could not be loaded.

Factory Reset

You can reset the camera to the ARRI factory default values.

➤ Select *MENU* > *Setup* > *Factory Reset*.

➤ Push the *RESET* button.

The camera settings are reset to factory defaults.

NOTICE

A factory reset does not delete user setups stored / installed in the camera.

19.1 User Setup Parameter Blocks

You can store the complete camera configuration or selected subsets of it. These subsets are organized into parameter blocks. They give maximum flexibility while maintaining logically consistent groups of settings. When you save a user setup, simply select the parameter blocks you want to include.

Format

Allows for easy switching between recording formats, including the following settings:

Recording Codec
Recording Resolution
Sensor Mode
Active Frame Line

Scene

The contents of this block are derived from scene files commonly used in live broadcast applications and primarily consist of image settings:

Look
White Balance
Texture
ND Filter
Exposure Index
EF Iris Value

Lens

Allows you to change quickly between different lens setups, including the following settings:

Lens Squeeze Factor
Lens motors direction
Active Lens Table
Lens motors torque
Lens Tables Installed
Lens motors teeth count
Lens Table Favorites
Diopter Compensation Settings
Focus Unit

User

The User block is where all parameters for camera personalization are stored:

EVF Overlays (all settings)
BAT Warning
Monitor Overlays (all settings)
PWR Warning
VF Surround View & Mask
Rec Beeper / Tally
VF Settings (all, except EVF Power)
Play End mode
SDI 1&2 Processing (all settings)
Button Brightness
User Buttons (all settings)
Display Style
Peaking (all settings)

General

Groups the general camera configuration and remaining settings such as:

Project Rate
Sensor FPS
Sensor FPS Presets
Shutter
Shutter Presets
WB Presets
Installed Look Files
Audio (All Settings)
Timecode (All Settings)
Metadata (All Settings)
Streaming Metadata (All settings)
CAP Server Settings
ECS Radio Power
Installed Frame Line Files
Installed Texture Files
SDI 1&2 Format
SDI 1&2 Frame Rate
SDI 1&2 Image
SDI 1&2 3G Level
ECS Radio Channel
Genlock Sync
Sync Shift
Mirror Image
Fan Mode
Prerec max. Duration

NOTICE

Network settings are not stored in the user setup.

20 Network

You can use a network connection to remotely control the camera. The camera's Web Remote, the Camera Companion App or other applications communicate with the camera through the Camera Access Protocol (CAP).

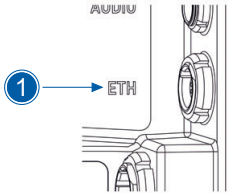

The Ethernet connector (1) is on the right side of the camera. Use the ALEXA ETH/RJ45 (3.0m / 9.8ft) KC 153-S (K2.72021.0) cable to connect the camera to a computer or network.

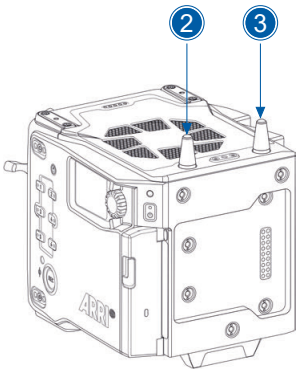

The camera has a 2.4 GHz WiFi module and two WiFi antennas (2, 3). They are on the rear top side of the camera.

You can configure the WiFi module of the camera as an access point or in infrastructure (client) mode.

CAUTION

Electrostatic Discharge on Open Connector

The WiFi module might be damaged by electrostatic discharge when you leave the connector without an antenna attached.

- ▶ Do not let the antenna connectors stay open during operation or transport.
- ▶ Use only the type of antenna originally supplied.

20.1 WiFi Settings

The camera supports the following WiFi standards and frequencies for use in Wireless Mesh Networks (WMN) and Wireless Local Area Networks (WLAN):

- 802.11a (5 GHz)
- 802.11b (2.4 GHz)
- 802.11g (2.4 GHz)
- 802.11n (2.4 / 5 GHz)
- 802.11ac (2.4 / 5 GHz)

The camera supports seamless handover between access points in a Wireless Mesh Network (WMN) using the following roaming standards:

- 802.11k
- 802.11r
- 802.11v

When connected to a mesh network with multiple access points, the camera will automatically switch to a new access point as needed. This ensures fast and reliable roaming as the device moves out of range of the previous access point.

WiFi Power

➤ Select *MENU* > *System* > *Network / WiFi* > *WiFi Power*, or

➤ Select *Side Display* > *Settings* > *WiFi*

to activate / de-activate the WiFi function of the camera.

Additionally, you can toggle WiFi power with the *FN function* button, or a user button with the WiFi Power function given.

WiFi Mode

The WiFi module of the camera can operate in Host Mode or Client Mode. It creates a wireless connection in the 2.4 GHz band. You can change the WiFi mode only when WiFi power is turned off.

➤ Select *MENU* > *System* > *Network / WiFi* > *WiFi Mode*.

Available options:

Host	The camera acts as a WiFi access point. The SSID of the camera is ALEXA35-xxxxx, where xxxxx is the last five digits of the serial number of the camera).
Client	The camera can connect to a WiFi network and receives an IP address via DHCP.

Icons on the HOME screen and the Status Info indicate the WiFi status:

Host mode is active.

Client mode is active, the connection to a network has been established.

Client mode is active, the camera is not connected to a network.

WiFi Password (Host Mode)

The camera requires a password when connecting to it through WiFi. The default password is arriarri.

➤ Select *MENU* > *System* > *Network / WiFi* > *WiFi Host Password*

➤ Set a custom password (8-32 characters).

WiFi Host Channel

➤ Select *MENU* > *System* > *Network / WiFi* > *WiFi Host Channel*.

Available options:

Automatic	The camera scans the environment and automatically selects the optimal WiFi channel each time Wi-Fi is powered on or the camera is restarted. To manually trigger a new scan, select "Automatic" again.
Manual Selection	You can manually select a WiFi channel. The number of available channels depends on the region: either channels 1–11 or 1–13 may be offered. The camera automatically detects the current region by scanning nearby Wi-Fi networks. It may take up to 2 minutes after powering on Wi-Fi for the correct regional settings to be applied.

When using WiFi and "White Radio [▸ 118]" simultaneously, make sure the selected channels do not interfere with each other to maintain optimal performance.

The table below gives an overview of correct channel configurations:

			ARRI White Radio Channels													
	✔	✘	0	1	2	3	4	5	6	7	8	9	10	11	12	13
WiFi Channels		MHz	2400	2415	2430	2435	2450	2455	2470	2475	2420	2425	2440	2445	2460	2465
International	1	2412														
	2	2417														
	3	2422														
	4	2427														
	5	2432														
	6	2437														
	7	2442														
	8	2447														
	9	2452														
	10	2457														
	11	2462														
USA low power	12	2467														
	13	2472														
			12	13	16	17	20	21	24	25	14	15	18	19	22	23
			ZigBee IEEE 802.15.4 Channel													

To Connect to a Network (Client Mode)

➤ Select *MENU* > *System* > *Network / WiFi* > *WiFi Network* > *Available WiFi Networks* and select the correct network from the list.

If the selected WiFi network is secured, you are prompted to enter the password.

➤ Enter the password and push the *CONNECT* button.

Once the camera successfully connects to a WiFi network, the network and its password are saved to the list of *Known WiFi Networks*. This allows the camera to reconnect to the same network in the future without requiring the user to enter the password again.

Within the *Known WiFi Networks* list, you can also mark individual networks with *Auto Join*. This enables the camera to automatically reconnect to those networks when they are in range.

The Auto Join icon indicates when WiFi networks are set to Auto Join.

Upon reboot, the camera will attempt to reconnect automatically to a network from the Known WiFi Networks list. It first tries to connect to the last network used. If that fails, it connects to the available Auto Join network with the strongest signal.

To Connect to a Network using a QR Code (Client Mode)

You can use a QR code to connect to a WiFi network. The WiFi credentials shall use the following format:

WIFI:S:*my-ssid;T:[WEP|WPA|WPA2];*P:*my-password;;*

Replace *my-ssid*, *my-password*, and the security type with your actual network credentials.

➢ Select *MENU* > *System* > *Network / WiFi* > *WiFi Network* > *SCAN QR*.

➢ Hold the QR-Code in front of the lens so that it fills the frame and is in focus.

A popup window with QR-Code data is shown.

➢ Push the *CONNECT* button.

NOTICE

- ▶ QR Code scanning is not available with the Camera Control Monitor CCM-1 connected.
- ▶ QR Code scanning is not working when Mirror Image is set to V (vertical) or H (horizontal).

To Disconnect from a Network (Client Mode)

To disconnect the camera from a WiFi network, there is no dedicated "Disconnect" option in the menu. Instead, use one of the following methods:

➢ Select *MENU* > *System* > *Network / WiFi* > *WiFi Power* and switch WiFi off. This immediately disconnects the current network connection.

➢ Connect to a different network. Selecting and connecting to another available WiFi network automatically disconnects the current one.

20.2 Ethernet Settings

LAN IP Mode

➢ Select *MENU* > *System* > *Network / WiFi* > *LAN IP Mode*.

Available options:

Static	Enter an IP address and subnet mask manually.
DHCP	Let the camera accept a dynamically assigned IP address from an DHCP server.

LAN Static IP

➢ Select *MENU* > *System* > *Network / WiFi* > *LAN Static IP* to set the correct LAN Static IP address.

LAN Static Subnet

➢ Select *MENU* > *System* > *Network / WiFi* > *LAN Static Subnet* to set the correct LAN Static subnet.

LAN Static Gateway

➢ Select *MENU* > *System* > *Network / WiFi* > *LAN Static Gateway* to set the correct LAN Static gateway.

20.3 Streaming Metadata

The camera supports streaming real time metadata via Ethernet for use in virtual studios (aka volumes with an LED wall, aka mixed reality production systems). For more information please refer to the ARRI Live Link Metadata Manual, which is available for download in the Technical Downloads section on the ARRI website.

Streaming Addressing

➢ Select M*ENU* > *System* > *Network / WiFi* > *Streaming Metadata* > *Streaming Addressing* to set the type of addressing.

Available options:

Unicast	The metadata is transmitted from the camera to an endpoint via any nodes.

Multicast	The metadata is transmitted to multiple recipients or to a closed group of recipients.

Streaming Address

➤ Select *MENU* > *System* > *Network / WiFi* > *Streaming Metadata* > *Streaming Address* to set the destination IP address.

NOTICE

When streaming addressing is set to Multicast, the allowed address range is within IP subnet 239.192.0.0/16.

Streaming Port

➤ Select *MENU* > *System* > *Network / WiFi* > *Streaming Metadata* > *Streaming Port* to set the destination port between 1.024 and 65.535.

Enable Streaming

➤ Select *MENU* > *System* > *Network / WiFi* > *Streaming Metadata* > *Enable Streaming* to enable metadata streaming.

21 Metadata

An ARRI camera automatically collects metadata when shooting. The metadata is stored in the header of recorded MXF/Apple ProRes and MXF/ARRIRAW files. The data is also stored in separate Avid Log Exchange ALE files, which keep track of all statics that are recorded on one recording media. Additionally, ARRI cameras can record lens data dynamically frame-by-frame. Metadata can be accessed, visualized, and exported directly in the ARRI Reference Tool.

For more information about ARRI camera metadata, please refer to the ARRI Metadata White Paper, available in the Technical Downloads section on the ARRI website.

Production Metadata in Camera Menu

➤ Select *MENU* > *Metadata* > to enter production metadata.

22 Lens & Electronic Control System

22.1 Lens Data

ARRI Lens Data System (LDS)

The Lens Data System (LDS) allows ARRI cameras and accessories to identify connected lenses and exchange dynamic lens data reflecting the current lens settings. It works with cine lenses using ARRI LDS or LDS-2 technology, lenses using Cooke /i technology and even cine lenses without lens data capabilities. LDS also offers basic support for most B4 or PL ENG lenses and Canon photo lenses when used with the appropriate mount. Available lens information can be shown live on lens control units like the Hi-5 or WCU-4, in the camera's viewfinder and on the monitoring outputs. It is sent with very low latency via Ethernet for use in mixed reality / virtual production environments and embedded as ancillary data in the SDI output. Postproduction benefits from frame accurate dynamic (per frame) and static (per clip) lens data in all original camera files.

Lenses with ARRI LDS Technology

Most ARRI lenses following the ARRI/Zeiss Ultra Prime LDS have built-in LDS functionality. This offers basic lens information and accurate lens tables for the Focus, Iris, and Zoom axis (if applicable). LDS lenses have integrated encoders for each axis and therefore deliver lens metadata even if the lens is adjusted manually. LDS-2 is the latest generation of the lens data system. It was introduced with the LPL mount and ARRI Signature Prime and Signature Zoom lenses. LDS-2 offers more bandwidth, higher precision, and faster communication. LDS-2 requires no calibration turn to the end stops of each lens ring to deliver data. LDS-2 is prepared for future applications and is being licensed to other lens and camera manufacturers.

Lenses with Cooke /i Technology

Many lenses, camera and lens control system manufacturers rely on /i Technology, which has been designed and developed by Cooke Optics as an open lens metadata protocol. Every ARRI ALEXA camera with an LDS capable lens mount, including the original ARRI ALEXA "Classic", supports basic /i Technology. Please note that some older Cooke lenses may be running on outdated firmware. This is likely to cause incompatibilities with the LDS. Please contact Cooke Optics directly for more information about checking the lens firmware version and available updates.

Lenses without Lens Data Capabilities

To get the FIZ information for a lens without lens data capabilities, the LDS can derive the lens ring positions based on end-to-end calibrated lens motor positions and a lens file that is used as a look up table. These files are available from the Lens Data Archive (LDA), a local library of lens files, which can also be extended by the user. The LDA exists in ARRI cameras or accessories like the UMC-4, RIA-1, or cforce mini RF or in the ECS sync app for iOS.

To create a new lens file, you need a camera, lens motors, a HI-5 or WCU-4 wireless lens control unit and the lens. First, the motors are calibrated to the end stops of their lens rings. Then, axis by axis, the lens control is used to drive the lens to each marking on the lens barrel and to set markers for the corresponding motor (encoder) position. Finally, the lens file can be stored by e.g. model, focal length and optionally lens serial number. Programming a lens file takes a while, but is time well spent, as it can be shared between LDAs and therefore only needs to be done once.

ARRI Lens Data Mount

Certain non-LDS lenses can be retrofit with an ARRI Lens Data Mount (LDM-2), which is programmed with the lens file. Using a Lens Data Mount instead of the LDA is more practical where one lens may be used on many cameras, such as a camera rental operation. It also saves time in production as the LDS automatically uses the file when the lens is attached.

The LDM-2 is available for Angénieux Optimo 24-290, Angénieux 17-102, Angénieux 25-250, Cooke 25-250, Cooke 18-100 and Zeiss Apo Tessar 300.

Lens Data Display in Camera

Lens data can be shown as camera status overlays in the viewfinder and the SDI outputs. Single overlays for focus distance, iris and focal length are shown. For further information please see section "Status Information and Overlays [▸ 38]".

You can configure the camera to show metric or imperial readings:

➤ Select *MENU* > *Lens & ECS* > *Focus Unit* to set the correct focus unit.

Available options:

Lens Default	Focus unit is shown according to the markings on the lens (requires LDS or Cooke /i lens).
Imperial	Focus unit is shown in Feet.
Metric	Focus unit is shown in Meter.

Circle of Confusion

➤ Select *MENU* > *Lens & ECS* > *Circle of Confusion* to set the Circle of Confusion.

Available options:

0.009	*0.013*	*0.025*

22.2 Lens Data Archive

The Lens Data Archive (LDA) is an archive that contains lens tables. In combination with the lens motor(s) these lens tables provide lens data for lenses without a lens data interface. The lens tables set the raw motor encoder values in correlation to the actual lens scales. Once you select the right lens table from the Lens Data Archive and calibrate your lens motors, you get the same type of lens data as an LDS lens would deliver. You can create your own lens tables for any given lens with the Hi-5 or WCU-4 hand units and save them internally, externally to a USB-C medium, or in an iOS device with the ECS Sync App. Lens tables can then be transferred wirelessly from the hand units to the camera.

To Add Lens Tables from the USB-C Medium

➤ Select *MENU* > *Lens & ECS* > *Lens Data* > *Lens Tables Installed* > *ADD*.

➤ Push the *IMPORT* button to import lens tables from a USB-C medium or the *DEFAULTS* button to select a lens table from the internal lens tables default list.

➤ Select the desired lens table from the list and push the *IMPORT* button.

The lens table is imported to the camera's Lens Tables Installed list.

➤ To use the lens table, select the lens table from the Lens Tables Installed list and push the *SET* button.

Some lens tables contain different scale classes for the same lens model. The scale class of an individual lens is engraved on the lens barrel. If required, select the corresponding scale class from the list.

You can load a lens table even when an LDS lens is attached. The LDA values calculated from motor positions and lens tables take precedence over the values communicated by the lens itself. This can be necessary if the lens data from the lens is faulty or imprecise.

As soon as an LDA table is activated, the LDS contacts of the lens mount are switched off, indicated through the LDS icon on the HOME screen and in the Status Info.

Lens Tables Favorites List

You can add frequently used lens tables to a favorites list. The list shows all lenses that have been added before, including the selected scale class.

To Add Lens Tables to the Favorites List

➤ Select *MENU* > *Lens & ECS* > *Lens Data* > *Lens Tables Installed* and select and set a lens table for use.

➤ Select *MENU* > *Lens & ECS* > *Lens Table* > *Add to Favorites* to add the lens table to the favorites list.

To Select a Lens Table from the Favorites List

➤ Select *MENU* > *Lens & ECS* > *Lens Data* > *Lens Table Favorites* and select and set a lens table from the list.

22.3 White Radio Configuration

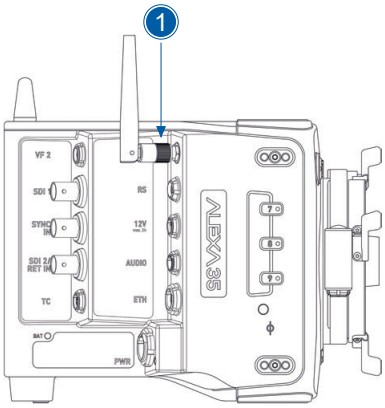

The ARRI HI-5, WCU-4 and SXU-1 handheld units can connect to the camera through the integrated radio unit. It activates wireless lens control, lens data communication and remote control of basic camera functions. The radio system is referred to as white radio. The connector for the white radio antenna is on the right side of the camera (1).

For correct wireless operation, please ensure that the white radio antenna is installed correctly on the camera.

CAUTION

Electrostatic Discharge on Open Connector

The White Radio module might be damaged by electrostatic discharge when leaving the connector without antenna attached.

- ▶ Do not let the antenna connectors stay open during operation or transport.
- ▶ Use only the type of antenna originally supplied.

Radio Power and Radio Channel

➤ Select *MENU* > *Lens & ECS* > *Radio* > *Power* to enable white radio.

➤ Select *MENU* > *Lens & ECS* > *Radio* > *Channel* to select the white radio channel.

Available options:

Channel	Frequency	ZigBee IEEE 802.15.4 Channel	Channel	Frequency	ZigBee IEEE 802.15.4 Channel
0	2.410 GHz	12	7	2.475 GHz	25
1	2.415 GHz	13	8	2.420 GHz	14
2	2.430 GHz	16	9	2.425 GHz	15
3	2.435 GHz	17	10	2.440 GHz	18
4	2.450 GHz	20	11	2.445 GHz	19
5	2.455 GHz	21	12	2.460 GHz	22
6	2.470 GHz	24	13	2.465 GHz	23

Active white radio and set channel number is indicated through the white radio icon shown on the HOME screen as well as in the Status Info.

To connect a hand unit to the camera set the hand unit's radio channel to the same value. Make sure that each camera on set uses its own white radio channel. It is not supported that one hand unit connects to two cameras in parallel.

NOTICE

When you use white radio and WiFi simultaneously it is important to configure the used channels to avoid interference and guarantee optimal performance. See the channel configuration table in section "WiFi Settings [▸ 110]" for more information.

- *MENU* > *Lens & ECS* > *Radio* > *Status* shows the status of the white radio module:

Off	White Radio is de-activated.
Init	White Radio is initializing.
Ready	White radio is initialized and ready for use.
Blocked	Selected White Radio channel is already in use by another camera on set.

- *MENU* > *Lens & ECS* > *Radio* > *Connected Devices* shows the amount of hand units connected to the camera. Up to three hand units can connect to one camera in parallel.

Region Setting

The wireless region setting specifies the region the white radio can be used in compliance with local regulations.

➢ Select *MENU* > *Lens & ECS* > *Radio* > *Wireless Region Setting* to set the region.

Available options:

Australia	*India*	*South Africa*	*World*
Canada	*Israel*	*South Korea*	
China	*Japan*	*Taiwan*	
Egypt	*New Zealand*	*Thailand*	
Europe	*Philippines*	*UAE*	
Hong Kong	*Singapore*	*USA*	

➢ Select *World* if your specific region is not listed.

NOTICE

Please ensure that the region is configured correctly. It may be illegal to use White Radio in a region other than specified in the setting. All settings are compliant to FCC and IC regulations.

22.4 Lens Motors

The camera supports the use of cforce mini, cforce plus and cforce mini RF lens motors. Lens motors connect to the LBUS connector of the camera and / or the lens mount. They can be daisy chained. For more information about lens motors, please download the lens motor user manuals from the Lens Motors section on the ARRI website.

WARNING

Rotating Lens Motor

Risk of crushing fingers and capturing and unraveling long hair, jewelry and/or clothing.

- ▶ Make sure that the lens motor is properly attached to the lens.
- ▶ Do not touch the lens motor gears while they are moving.
- ▶ Keep hair and loose clothing away from the motor gear teeth.
- ▶ Keep cables connected to the camera away from the motor gear teeth.

After a lens motor has been connected to the camera, it shall be calibrated before you can use it.

The camera indicates the calibration request by showing an orange CAL icon on the HOME screen and in the Status Info. The icon turns gray once calibration is in progress and expires when calibration has finished.

➤ Select *MENU* > *Lens & ECS* > *Calibrate Lens Motors* to start calibration of all connected lens motors. As an alternative, you can trigger motor calibration through the hand unit or the motor itself.

User Button *Calibrate Lens Motors* calibrates all connected lens motors.

Motor Torque

➤ Select *MENU* > *Lens & ECS* > *LBUS Lens Motor Configuration Focus / Iris / Zoom Motor Torque* to set the torque of a lens motor in the range of *1* (the lowest torque) to *4* (the highest torque).

Motor Direction

➤ Select *MENU* > *Lens & ECS* > *LBUS Lens Motor Configuration Focus / Iris / Zoom Motor Direction* to set the motor direction between *Left* and *Right*.

Use *Left* if a lens motor is to the left of the lens, use *Right* if it is to the right.

Teeth Count

The motor teeth count setting is only active when an LDA lens table is active and is used to assure correct lens table mappings when using a different motor gear than the one the lens table was initially created with. The number of teeth can be read on the gear wheel of the motor.

➤ Select *MENU* > *Lens & ECS* > *LBUS Lens Motor Configuration Focus / Iris / Zoom Motor Teeth Count* to set the teeth count.

Available options:

Auto	The camera determines the teeth count during motor calibration.
40t	The motor has a 40 tooth gear.
50t	The motor has a 50 tooth gear.
60t	The motor has a 60 tooth gear.

22.5 To Change a Lens

CAUTION

Risk of Damage and Injury when Exceeding the Specified Entry Depth

LPL mount lenses with more than **30.00 mm / 1.18 in** entry depth and PL mount lenses with more than **38.00 mm / 1.496 in** entry depth might damage the camera's internal filters. Shards from broken filter glass might cause injury.

- Do not use LPL mount lenses with more than 30.00 mm / 1.18 in entry depth.
- Do not use PL mount lenses with more than 38.00 / 1.496 in mm entry depth.
- Use only lenses that do not exceed the dimensions shown in the figures below (left: LPL mount lenses, right: PL mount lenses).
- To ensure maximum allowable lens mounting depth always have your camera and lenses shimmed correctly.

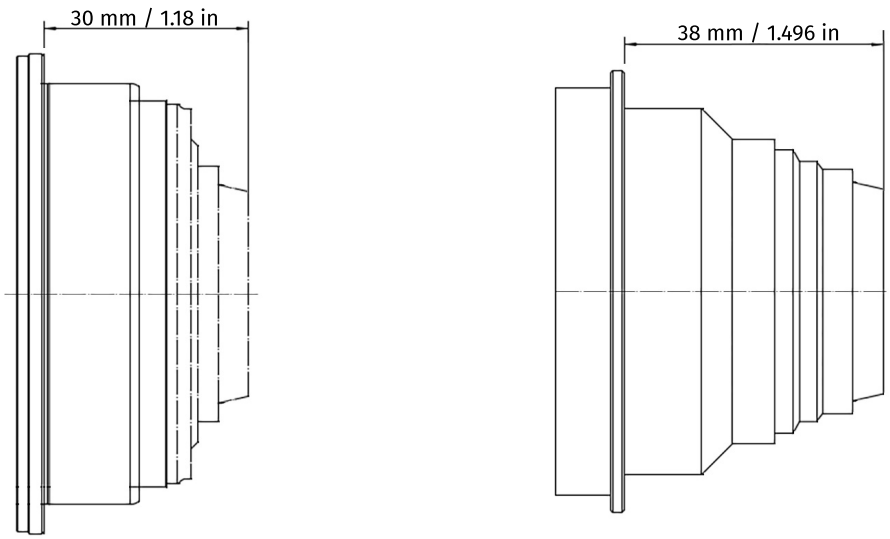

NOTICE

Dust Particles on the Sensor Cover Glass may Affect the Recorded Image

When no lens or lens cap is attached to the camera, dirt and dust particles may enter the camera and settle on the sensor cover glass. Particles on the sensor cover glass can later be visible in the recordings made by the camera.

- Do change a lense or a lens mount in a dry and dust free environment. If this is not possible, take extra care that no particles enter the camera while the lens or the lens mount is off.
- After removal of a lens, perform a dust check to make sure no particles have settled on the sensor cover glass.
- Place the protective cap on the lens mount when no lens is attached to the camera.
- Always store the camera with a lens mount with protective cap or camera front cover installed.
- Protect all optical surfaces when you change a lens or lens mount.

NOTICE

Heavy Lenses may Affect the Flange Focal Depth

Using heavy lenses without a proper lens support can put stress on the lens mount and affect the flange focal depth.

- Always use a correct lens support for lenses heavier than 3 kg / 6.6 lbs.

Lens change on the LPL mount, the PL mounts and the PL-to-LPL Adapter is the same procedure. The description below shows an LPL mount.

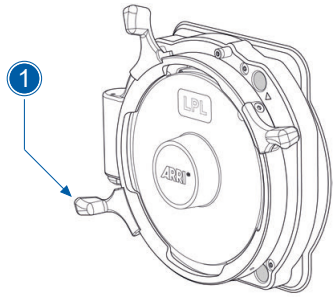

➢ When you remove a lens, hold the lens securely.

➢ Turn the bayonet ring (1) anticlockwise until it stops.

➢ Gently remove the lens / lens port cap from the lens mount.

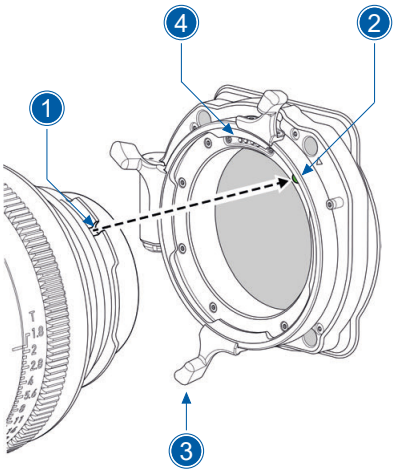

➢ Carefully insert the lens into the lens mount. Align the notch in the lens flange (1) with the index pin on the lens mount (2). Keep the lens rotated into a position where the lens markings are visible from both sides of the camera.

➢ When you attach an LDS lens, make sure that the LDS contacts of the lens and lens mount (4) meet (12:00 position). Do not touch the LDS contacts.

➢ Carefully push the lens flange flat onto the lens mount.

➢ Turn the bayonet ring (3) clockwise until the lens is locked securely.

22.6 EF Lens Iris Adjustment

You can control the aperture of EF lenses with EF Mount through the camera menu. The option is only available when the camera is equipped with an EF Mount. In addition, the ARRI Master Grips or the Operator Control Unit OCU-1 can control the iris of EF lenses with EF Mount.

➢ Select *HOME* > *EI* > *Iris*.

➢ Turn the jog wheel to open or close the iris of the EF lens. Push the jog wheel to toggle between full stops and sub stops.

NOTICE

Sub stop precision depends on the lens type and is automatically set by the camera.

User Buttons *EF Close Iris* and *EF Open Iris* adjust the iris of an EF lens.

22.7 Enable Lens Mount

You can de-activate the LDS contacts of the lens mount. Usually this is not necessary, but it can be helpful when e.g. lenses with faulty lens data are used. Please note that as soon as an LDA lens table is activated, the LDS contacts of the lens mount are de-activated automatically. There is no need to de-activate the mount manually when using LDA lens tables.

➢ Select *MENU* > *Lens & ECS* > *Enable Lens Mount* to activate / de-activate the lens mount contacts of the lens mount.

LDS✕ De-activated lens mount contacts are indicated through the LDS icon on the HOME screen and in the Status Info.

22.8 Diopter Compensation (BETA)

The Diopter Compensation addresses the focus shift introduced using front diopters or optical filters such as ARRI Ensō Vintage Elements and Signature Impression V Filters. It dynamically recalculates the lens's focus scale and gives corrected focus distance readings that make the optical changes introduced by the diopter or filter sure. The Diopter Compensation is very useful for focus pullers, as it takes the guesswork out of manually compensating for focus shifts.

The ARRI Ensō Vintage Elements and ARRI Signature Impression V Filters introduce spherical aberration, a deliberate optical effect that enhances the vintage aesthetic when used with ARRI Ensō Prime and ARRI Signature Prime and Zoom lenses. This spherical aberration subtly alters the optical characteristics of the lens. One notable side effect of spherical aberration is a shift in the focus scale, which varies depending on the specific filter applied and the aperture setting of the lens. In addition, the use of these filters has a minor influence on both the focal length and the T-stop value of the lens. These changes, though slight, can have an impact on focusing, making it important for focus pullers to take these effects into account.

Front Diopters are specialized optical accessories that attach to the front of a lens. They enable a reduction in the minimum focus distance. Filmmakers and photographers can achieve sharp focus on subjects at closer ranges than the lens's native capabilities. They make them ideal for detailed close-ups and macro-style shots. The use of front diopters also impacts the focus scale of the lens. By altering the lens's optical path, diopters shift the focus range, meaning the original focus markings may no longer align precisely with the actual point of focus.

The Diopter Compensation is available exclusively when Ensō Vintage Elements are paired with Ensō Prime lenses or when Signature Impression V filters are paired with Signature Prime lenses. For instance, compensation cannot be applied if Ensō Prime lenses are used in combination with Signature Impression V filters.

In addition, all necessary data required to perform the compensation—such as diopter selection, type, shim thickness or the distance between the diopter and the sensor—along with both the original lens data and the compensation-corrected data, are written into the metadata of the recorded clips.

Diopter Type

➢ Select *MENU* > *Lens & ECS* > *Diopter Compensation* > *Diopter Type* to specify the diopter/filter type in use.

Available options:

None	No diopter/filter is in use. This is the factory default.
Ensō Vintage Element	An Ensō Vintage Element is in use.
Signature Impression V	A Signature Impression V filter is in use.
Front	A Front diopter is in use.

➢ Select *MENU* > *Lens & ECS* > *Diopter Compensation* > *Diopter Selection* to specify the strength of the diopter/filter in use.

The strength of a front diopter is measured in diopters, with the value typically marked directly on the diopter. You can choose a preset value from the list or add a custom value as needed.

The diopter icon in the status info of the EVF and SDI provides information about the selected diopter/filter. For Ensō Elements and Signature Impression V filters, the specific filter designation is shown (left). When using front diopters, the icon shows the diopter strength in diopters (right).

NOTICE

- When using Ensō Primes with Ensō Vintage Elements, the Diopter Type and Diopter Selection are automatically configured.
- The Diopter Compensation feature is available exclusively when Ensō Vintage Elements are paired with Ensō Prime lenses or when Signature Impression V filters are paired with Signature Prime lenses. For instance, compensation cannot be applied if Ensō Prime lenses are used in combination with Signature Impression V filters.

Shim Thickness

It is highly recommended that you consult the user manuals for Ensō Prime Lenses / Vintage Elements and Signature Prime Lenses / Impression V Filters for comprehensive and essential information on shimming.

The Diopter Compensation feature is designed to provide accurate focus distance readings when Ensō Vintage Elements or Signature Impression V filters alter the lens's optical path. However, its necessity depends on how the lens is shimmed and the aperture settings used:

- Proper Shimming and Standard Aperture Usage
  When the lens is shimmed according to specifications and used at the aperture for which it was shimmed, the original scale markings on the lens remain accurate. In this case, the Diopter Compensation feature is not needed, as the lens maintains its intended focus distance accuracy.
- Proper Shimming with a Different Aperture
  If the lens is properly shimmed but used at an aperture other than the one for which it was shimmed, slight shifts in focus distance may occur. In this scenario, the Diopter Compensation feature becomes useful, as it adjusts for the minor focus inaccuracies introduced by the aperture change.
- Positive Filters/Elements Without Shimming
  When positive filters/elements are used without shimming the lens, the Diopter Compensation feature can display corrected focus values, ensuring accuracy despite the altered optical path.
- Negative Filters/Elements Without Shimming
  For negative filters/elements, the Diopter Compensation feature cannot compensate if the lens has not been shimmed. It can only provide the aperture-based adjustment described in point 2, and this only works if the lens was originally shimmed to a specific aperture. Without proper shimming, accurate correction for focus shifts caused by negative filters is not possible.

When using Ensō Vintage Elements or Signature Impression V filters, the thickness of the shim applied to the lens shall be specified. Enter only the thickness of the shim you have added for the specific element/filter in use. Do not include any shims already installed on the lens.

➤ Select *MENU* > *Lens & ECS* > *Diopter Compensation* > *Shim Thickness* to specify the shimming of the lens. Select a shim thickness from the list or "add [▸ 28]" a custom value.

Distance Diopter to Sensor

When using front diopters, the distance from the diopter to the sensor plane of the camera shall be specified.

➤ Select *MENU* > *Lens & ECS* > *Diopter Compensation* > *Distance Diopter to Sensor* to specify the distance in cm or inches (depending on the set focus unit).

To Activate and De-activate Diopter Compensation

You can activate the Diopter Compensation when all the necessary information for recalculating the lens data is available.

➤ Select *MENU* > *Lens & ECS* > *Diopter Compensation* > *Diopter Compensation* to activate and de-activate the Diopter Compensation.

When Diopter Compensation is active, the Focus, Iris, and Focal Length readings are shown in brackets to indicate that these values have been corrected/compensated.

23 Remote Control

23.1 Web Remote

You can control the camera remotely using the camera's Web Remote feature accessed through the LPS-1 web UI or with a direct Ethernet or WiFi connection.

The connection to the camera web remote is set up automatically by the LPS-1 system. To set up a WiFi or Ethernet connection where direct communication is needed to the camera from different platforms please follow the instructions below.

➢ Connect the camera to a computer through WiFi or Ethernet.

➢ Open a web browser and enter the URL http://localALEXA35-xxxxx.local (replace xxxxx with the camera's 5-digit serial number).

To access the Web Remote through this URL, the device shall support zero-configuration networking (zeroconf), such as Apple Bonjour. If zeroconf is not available, the Web Remote can be accessed through the network's IP address (WiFi or LAN IP). The WiFi IP is set to 192.168.153.1 by default. You can assign the LAN IP by a DHCP server or configured manually. To check the LAN IP, navigate to *MENU* > *Info* > *Network Info*, or view the Info page on the side display.

WiFi is active per factory default, If WiFi is not active, activate WiFi through the MVF-2 in *MENU* > *System* > *Network / WiFi* > *WiFi Power*. If no MVF-2 is connected, push the FUNCTION button FN and camera button 6 to activate WiFi.

HOME

Shows the camera HOME screen (as on MVF-2) with access to the main parameters.

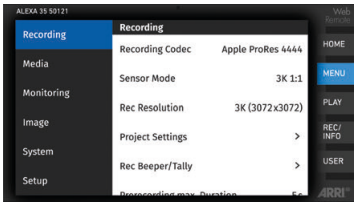

MENU

Access to the camera menu.

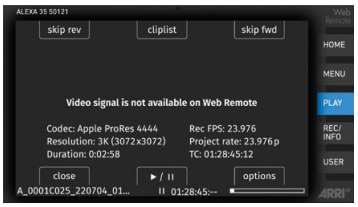

PLAY

Starts playback from the recording medium. Provides the same controls as the MVF-2 but does not show a video signal.

REC / INFO

Contains information on the main recording parameters, plus a *REC* button. Click the big circle icon to start / stop recording.

Rec status and timecode may respond slightly delayed depending on the network's speed.

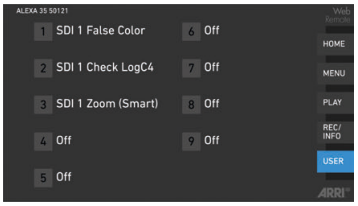

USER

Shows configuration of the camera user buttons and allows you to trigger them. Push the number icons to trigger the user buttons.

NOTICE

Frequent reloading of the Web Remote camera interface connected with WiFi indicates a limited WiFi range. Please place the device closer to the camera or connect via Ethernet. You may also consider using the WiFi client mode which allows connecting the camera to a WiFi network.

After a camera update, the Web Remote feature may not be fully functional until the browser cache of your web browser has been cleared. Always use a 'private' or 'incognito' browser window when using the Web Remote to operate the camera and to perform a SUP update. This prevents possible erratic behavior.

23.2 Camera Access Protocol

The Camera Access Protocol (CAP) is an IP based API used to control and monitor ARRI cameras through a network connection. The protocol incorporates functions to perform color grading, query and set values like exposure index or sensor frame rate, start, and stop recording and many more. Information on the Camera Access Protocol is available through the ARRI Partner Program free of charge. For more details, please see our ARRI Partner Program and the Camera Access Protocol Feature List in the Technical Downloads section on the ARRI website.

To Activate a CAP Server

➤ Select *MENU* > *System* > *Camera Access Protocol (CAP)* > *Enable CAP Server* to activate or de-activate switch remote access to the camera through the Camera Access Protocol. Per factory default, the server is active.

HINT

The Camera Control Monitor CCM-1 and the Fiber Camera Adapter of the LPS-1 system communicate with the camera through the CAP protocol. If the CAP server is not active, the range of functions of these devices is limited.

CAP Server Password

➤ Select *MENU* > *System* > *Camera Access Protocol (CAP)* > *Cap Server Password*.

➤ Use the on-screen keyboard to enter a password used for Camera Access Protocol connections.

CAP Client List

The CAP client list shows the name of the currently connected client. The list shows 'NONE' if no client is connected, and 'NO NAME' if the connected client has not transmitted its name.

➤ Select *MENU* > *System* > *Camera Access Protocol (CAP)* > *CAP Client List* to show the list.

23.3 Camera Companion App

The Camera Companion App offers remote control of one or multiple cameras, and customization of the app's user interface. It focuses on the functions that are most frequently used during production. The app uses the Camera Access Protocol (CAP) through the camera's internal WiFi radio or the ETH interface. The app is available for download from the Apple App Store and can be used on iPhone, iPad, M1 and M2 Mac computers and the Apple watch.

23.4 Hand Units Hi-5 and WCU-4

The following settings are available through the ARRI hand units Hi-5 and WCU-4:

Rec start/stop	White Balance	False Color
Full Playback Control	ND Filter	Frame Lines
Sensor Frame Rate	Peaking	User Buttons
Shutter Angle	Surround View	User Setups
Exposure Index	Status Info	

24 ALEXA 35 Accessories

24.1 Lens Mounts

ARRI LPL Mount (LBUS) K2.0018983

A lens mount specifically designed for large format and/or full frame lenses with an LPL (Large Positive Lock) mount. Compatible with ARRI LDS-2 and Cooke /i. Can be equipped with the PL-to-LPL Adapter to accept PL mount lenses. Includes an LBUS connector for cforce-type lens motors. In comparison to the PL mount, the LPL mount has a wider diameter (62 mm vs. 54 mm) and a shorter flange focal distance (44 mm vs. 52 mm). Optimized for the increased dynamic range of the ARRI ALEXA 35 sensor.

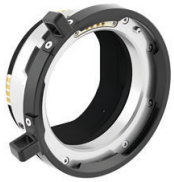

PL-to-LPL Adapter K2.0016936

An adapter that can be used to attach PL mount lenses to a camera with an LPL mount. Compatible with ARRI LDS-1 and Cooke /i. The adapter can be mounted either so that the LDS contacts are in the 12:00 position for ARRI lenses, or so that the LDS contacts are in the 3:00 position for Cooke lenses.

PL Mount (LBUS) K2.0042651

A PL lens mount with an LBUS connector optimized for the increased dynamic range of the ARRI ALEXA 35 sensor. Reduced internal reflection properties ensure that the full contrast of the image from the lens reaches the sensor. The PL Mount (LBUS) is compatible with ARRI ALEXA 35, ARRI ALEXA 265, ARRI ALEXA Mini LF, ARRI ALEXA Mini and ARRI AMIRA, but only ARRI ALEXA 35, ARRI ALEXA 265, ARRI ALEXA Mini LF and ARRI ALEXA Mini support the LBUS connector. Replaces the older “Titanium PL LDS mount with LBUS (K2.0003216)“.

PL Mount (Hirose) K2.0042652

A PL lens mount with a Hirose connector optimized for the increased dynamic range of the ARRI ALEXA 35 sensor. Reduced internal reflection properties ensure that the full contrast of the image from the lens reaches the sensor. The PL Mount (Hirose) is compatible with ARRI ALEXA 35, ARRI ALEXA 265, ARRI ALEXA Mini LF, ARRI ALEXA Mini and ARRI AMIRA. Replaces the older “PL LDS Lens Mount (Hirose) (K2.0001107)“.

EF Mount (LBUS) K2.0019965

An EF lens mount with an LBUS connector optimized for the increased dynamic range of the ARRI ALEXA 35 sensor. Reduced internal reflection properties ensure that the full contrast of the image from the lens reaches the sensor. This EF Mount (LBUS) has a wide light baffle that illuminates both Super 35 and large format sensor areas. Allows control of the electronic iris in many EF lenses through the camera menu and ARRI ECS devices. Also allows the use of the electronic Image Stabilization found in some EF lenses.

B4 Mount K2.0001237

The B4 lens mount with Hirose connector allows the use of B4 lenses with integrated servo modules.

PL to B4 Lens Adapter K2.0001238

A mechanical and optical adapter that allows the use of B4 mount lenses on cameras with a PL mount.

24.1.1 To Change the Lens Mount

WARNING

Changing the Lens Mount while the Camera is Energized

Risk of electric shock and permanent damage to the camera and lens mount.

- Always de-energize the camera and disconnect all power supplies before you change the lens mount.

NOTICE

Dust Particles on the Sensor Cover Glass may Affect the Recorded Image

When no lens or lens cap is attached to the camera, dirt and dust particles may enter the camera and settle on the sensor cover glass. Particles on the sensor cover glass can later be visible in the recordings made by the camera.

- Do change a lense or a lens mount in a dry and dust free environment. If this is not possible, take extra care that no particles enter the camera while the lens or the lens mount is off.
- After removal of a lens, perform a dust check to make sure no particles have settled on the sensor cover glass.
- Place the protective cap on the lens mount when no lens is attached to the camera.
- Always store the camera with a lens mount with protective cap or camera front cover installed.
- Protect all optical surfaces when you change a lens or lens mount.

NOTICE

When adjusting the flange focal depth on the LPL mount make sure to insert the shims in the correct orientation. Inserting the shims in the incorrect orientation (flipped) may result in a short circuit on the LDS print, compromising LDS functionality (lens detection and lens data).

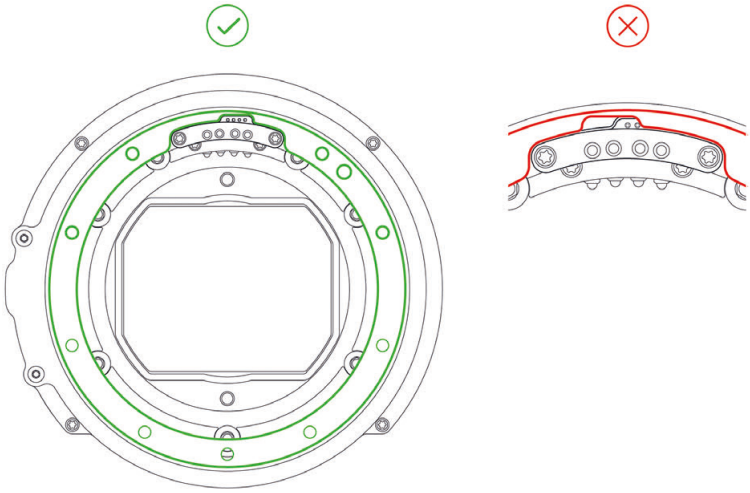

NOTICE

The Titanium PL LDS Mount with LBUS (K2.0003216), the ARRI AMIRA PL LDS Lens Mount (K2.0001107) and the EF Lens Mount (K2.0001103) are mechanically compatible with the ARRI ALEXA 35, but these lens mounts are not sufficiently stray light optimized to be used with the ARRI ALEXA 35.

New lens mounts specifically designed for the ARRI ALEXA 35 (PL Mount (LBUS) (K2.0042651), PL Mount (Hirose) (K2.0042652), EF Mount (LBUS) (K2.0019965) ensure that the high dynamic range of the sensor is not compromised by stray light that may be generated in the optomechanics of the camera.

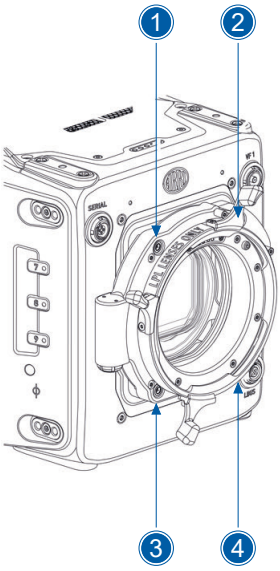

➤ De-energize the camera and unplug any power source.

➤ Loosen all four lens mount screws crosswise with a 3.0 mm Allen key.

➤ Carefully remove the lens mount (or camera front cover).

➤ Store the lens mount in a case for dust protection.

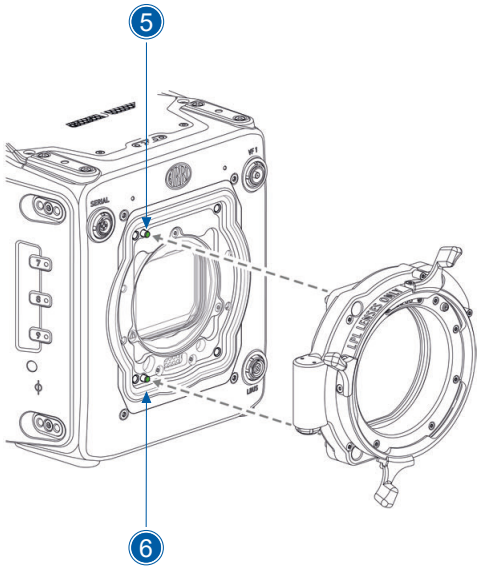

➢ Carefully align the lens mount with the two guiding pins (5, 6) on the camera's lens mount base.

➢ Hand-tighten all four lens mount screws crosswise with a 3.0 mm Allen key.

24.2 Mechanical Accessories

24.2.1 Bottom Accessories

Balance Utility Dovetail BUD-1 K2.0034180

The super small and lightweight Balance Utility Dovetail BUD-1 attaches to the ARRI ALEXA 35 bottom. Once mounted to the camera, the BUD-1's wide dovetail allows the camera to be securely and quickly attached and detached from and to all ARRI ALEXA 35 accessories that sit below the camera including the CBP-5, CBP-6, BPA-6, CSP-2 and SAM-5 through 9.

Additionally, the dovetail allows balancing of the camera on the accessories. Use the lever to lock or unlock the movement option. Push in the blue safety button to move the ARRI ALEXA 35/BUD-1 off whatever it is mounted on. Furthermore, keeping the BUD-1 attached to the camera ensures that the camera's air intake is not covered.

Bridge Plate BP-8 K2.0031436

The venerable Bridge Plate BP-8 sits between a Bridge Plate Adapter and the ARRI bottom dovetail plate and allows balancing of the camera. The BP-8 accepts two 19 mm studio rods without restrictions regarding forward and backward positioning of the rods.

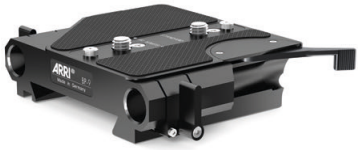

Bridge Plate BP-9 K2.0031435

The venerable Bridge Plate BP-9 sits between a Bridge Plate Adapter and the ARRI bottom dovetail plate and allows balancing of the camera. The BP-9 accepts two 15 mm studio rods without restrictions regarding forward and backward positioning of the rods.

Bridge Plate Adapter BPA-6 K2.0024745

While the Compact Bridge Plates represent the fastest, most comfortable, and flexible method to change from tripod to shoulder and to other camera supports, the BPA-6 provides an option for those who want to use tripods with “Touch and Go” plates or the classic ARRI Bridge Plates BP-8 or BP-9. The BPA-6 dovetail slides into the bottom of the Balance Utility Dovetail BUD-1. The bottom of the BPA-6 is a “Touch and Go 35” plate that allows quick mounting to a variety of tripod heads.

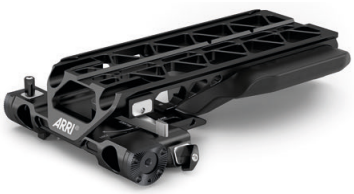

Compact Bridge Plate CBP-5 K2.0023549

The CBP-5 is a compact and lightweight base plate that combines the features of a sliding studio bridge plate with a comfortable Visco shoulder pad. Its unique quick-release system allows the CBP to be lifted straight off (or placed on) the bottom dovetail plate without having to slide it off (on). The Compact Bridge Plates represent the fastest, most comfortable and most flexible method to change from tripod to handheld and to other camera supports. The CBP-5 accepts 19 mm studio rods and 15 mm Lightweight rods.

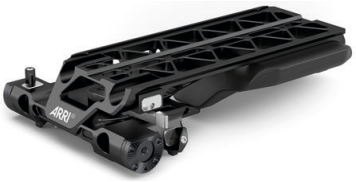

Compact Bridge Plate CBP-6 K2.0023836

The CBP-6 is a compact and lightweight base plate that combines the features of a sliding studio bridge plate with a comfortable Visco shoulder pad. Its unique quick-release system allows the CBP to be lifted straight off (or placed on) the bottom dovetail plate without having to slide it off (on). The Compact Bridge Plates represent the fastest, most comfortable and most flexible method to change from tripod to handheld and to other camera supports. The CBP-6 accepts 15 mm studio rods and 15 mm Lightweight rods.

Compact Shoulder Pad CSP-2 K2.0024161

The CSP-2 is a simple flat shoulder pad with a long, comfortable Visco pad. Its four (removable) metal feet allow the camera to be safely placed on any flat surface when not on the operator's shoulder. The CSP-2 slides into the bottom of the Balance Utility Dovetail BUD-1.

Bottom Plate 300 mm/12" K2.0015896

The 300 mm/12-inch Bottom Dovetail Plate is the standard for all prime lenses where minimal balancing is required.

Stabilizer Adapter Mount SAM-5 K2.0024572

The Stabilizer Adapter Mount SAM-5 is a sliding dove tail plate with a very small height that connects the ARRI ALEXA 35 to a MōVI Pro or M15. The SAM-5 top dove tail slides into the bottom of the Balance Utility Dovetail BUD-1. The SAM-5 bottom is a rail that slides into the top stage of the MōVI Pro or M15.

Stabilizer Adapter Mount SAM-6 K2.0024508

The Stabilizer Adapter Mount SAM-6 is a low-profile sliding dove tail plate that connects the ARRI ALEXA 35 to ARRI CSS products, such as ARRI TRINITY and SRH-3/360. The SAM-6 top dove tail slides into the bottom of the Balance Utility Dovetail BUD-1. The SAM-6 bottom is a dove tail that slides into the top stage of any ARRI CSS product.

Stabilizer Adapter Mount SAM-7 K2.0024511

The Stabilizer Adapter Mount SAM-7 is a low-profile sliding dove tail that connects the ARRI ALEXA 35 to ARRI Artemis and GPi PRO Stabilizers. The SAM-7 top dove tail slides into the bottom of the Balance Utility Dovetail BUD-1. The SAM-7 bottom is a dove tail that slides into the top stage of any stabilizer system using the GPi Pro standard (including the ARRI Artemis).

Stabilizer Adapter Mount SAM-8 K2.0044479

The Stabilizer Adapter Mount SAM-8 is a low-profile sliding dove tail plate that connects the ARRI ALEXA 35 to Tiffen Steadicam products, such as M1 and M2. The SAM-8 top dove tail slides into the bottom of the Balance Utility Dovetail BUD-1. The SAM-8 bottom is a dove tail that slides into the stage of Tiffen Steadicams.

Stabilizer Adapter Mount SAM-9 K2.0041949

The Stabilizer Adapter Mount SAM-9 is a low-profile sliding dove tail that connects the ARRI ALEXA 35 to DJI Ronin 2. The SAM-9 top dove tail slides into the bottom of the Balance Utility Dovetail BUD-1. The SAM-9 bottom is a dove tail that slides into the stage of DJI Ronin products.

24.2.2 Top Accessories

Low Mode Support LMS-4 K2.0034178

The Low Mode Support LMS-4 is a fully featured top plate for the ARRI ALEXA 35. A new quick release mechanism allows the CCH-5 top handle to be easily removed, without tools, while retaining superior rigidity while mounted. Dual rod clamps for optically centered 15 mm rods allow for top mounted motors or traditional viewfinder mounting brackets.

Multiple mounting points support a range of accessories and low mode mounting for the ARRI Artemis and other mechanical stabilizers. For even more mounting options, the LMS-4 can be extended with the TEB-1.

Universal Adapter Plate UAP-3 K2.0034179

The Universal Adapter Plate UAP-3 is a small and flat staging platform for the ARRI ALEXA 35 top accessories, including the Lightweight Camera Handle LCH-1 and Center Camera Handle CCH-2. For more mounting options, the UAP-3 can be extended to the back with the TEB-1. The UAP-3 can also be attached to the base of the camera when an ultra slim mounting plate is required for small rigging scenarios.

Top Extension Bracket TEB-1 K2.0024062

The Top Extension Bracket TEB-1 extends the Low Mode Support LMS-4 or Universal Adapter Plate UAP-3, so more accessories, including the Rear Accessory Bracket RAB-2 and Articulated Mounting Plate AMP-1, can be mounted to the camera's top and back.

Lightweight Support LWS-6 K2.0023948

The LWS-6 holds two 15 mm lightweight support rods. It is designed as an option to add lightweight rods to the Lightweight Camera Handle LCH-1 or to the Universal Adapter Plate UAP-3. When attached, rods are optically centered based on the lightweight rod standard and allow mounting further accessories like the Mini Viewfinder Bracket MVB-1, lens motors or matte boxes.

Center Camera Handle CCH-5 K2.0023519

The Center Camera Handle CCH-5 is a full-size production top handle that can be quickly attached and removed from the LMS-4 without tools. Featuring a wider, more comfortable grip than previous top handles the CCH-5 has been designed to allow common gimbal top plates to remain mounted to the camera, under the handle. Multiple mounting points adorn the handle for accessories and existing HEB and HEX handle extensions can be mounted to the front and rear.

Lightweight Camera Handle LCH-1 K2.0024066

The Lightweight Camera Handle LCH-1 is a lightweight carbon fiber top handle for carrying the ARRI ALEXA 35 and for mounting accessories. It can be quickly attached to or removed from the camera's top or the Universal Adapter Plate UAP-3 without tools, and the handle post can be slid forward and backwards to balance the camera in your hand.

Balance Harness Adapter BHA-1 K2.0034554

The Balance Harness Adapter BHA-1 allows the secure attachment and rapid balancing of the ARRI ALEXA 35 when using various camera suspension harnesses. The BHA-1 slips over the handle of the Lightweight Camera Handle LCH-1 and can be slid forwards and backwards with a simple thumbscrew. It features a 3/8-16 threaded hole for connection and can also be used to mount accessories to the top handle.

Viewfinder Mounting Bracket VMB-5 K2.0033859

The Viewfinder Mounting Bracket VMB-5 offers a longer reach than traditional viewfinder brackets and is the most flexible and comfortable method to attach a viewfinder to a camera. Positioning the viewfinder in a 360° arc is done by loosening a single thumb screw and freely repositioning the viewfinder, which will remain in place thanks to double friction based clamping mechanisms. The VMB-5 is compatible with all standard ARRI viewfinder extension brackets and viewfinder adapters. Requires SAS-1 for attachment to a camera.

Square Accessory Sleeve SAS-1 K2.0033733

The Square Accessory Sleeve SAS-1 is required to mount the VMB-5 to your camera and has been designed with a rectangular rod to prevent the viewfinder falling when loosening the adjustment clamp. The SAS-1 has been designed with the CCH-5 top handle in mind but can be mounted to any two M4 attachment points spaced 20 mm apart, as regularly found on ARRI camera accessories.

Viewfinder Cross Pipe K2.0013302

The Viewfinder Cross Pipe can be used in combination with the RMB-3 or RMB-7 to create a basic, simple viewfinder mounting bracket.

Mini Viewfinder Bracket MVB-1 K2.0006140

The Mini Viewfinder Bracket MVB-1 allows the MVF-1 viewfinder to attach to the ARRI ALEXA Mini and it allows the MVF-2 viewfinder to attach to the ARRI ALEXA 35 or ARRI ALEXA Mini LF. This is the traditional viewfinder mounting method found on ARRI ALEXA, ARRI ALEXA Mini and ARRI ALEXA Mini LF cameras.

Adjustable Top Plate for MōVI (K2.0024181)

The Adjustable Top Plate for MōVI connects any top accessory plate with two 3/8-16 or two 1/4-20 attachment points quickly to a MōVI Pro or M15 rig.

Monitor Arm for Camera MAC-1 (K2.0048394)

The two-axis MAC-1 monitor arm allows for rapid positioning of the monitor without affecting the horizon relative to the camera. The MAC-1 features an adjustable friction system for one-handed repositioning and inserts for ARRI 1/4" Pin- Lock and SmallHD mounting standards.

Viewfinder Adapter VFA-4 (K2.0048510)

The VFA-4 enables mounting of the Camera Control Monitor CCM-1 to standard ARRI viewfinder brackets without tools and comes with inserts for ARRI 1/4" Pin-Lock and smallHD mounting standards. A folding mechanism allows quick repositioning and flat storage of the CCM-1.

24.2.3 Side Accessories

Camera Side Bracket CSB-1L K2.0033573

The Camera Side Bracket CSB-1L allows mounting of accessories to the left side of the ARRI ALEXA 35. It features an ARRI rosette for hand grips and multiple 1/4-20, 3/8-16 and M4 mounting holes.

Camera Side Bracket CSB-1R K2.0033571

The Camera Side Bracket CSB-1R allows mounting of accessories to the right side of the ARRI ALEXA 35. It features an ARRI rosette for hand grips and multiple 1/4-20, 3/8-16 and M4 mounting holes. It can be extended with the Camera Side Bracket CSB-1R Extension (K2.0034189).

Camera Side Bracket CSB-1R Extension K2.0034189

The Camera Side Bracket CSB-1R Extension is an extension to the Camera Side Bracket CSB-1R, providing additional attachment points. It features multiple 1/4-20, 3/8-16 and M4 mounting holes. It attaches to the CSB-1R with two Torx T8 screws.

Articulated Mounting Plate AMP-1 K2.0034182

The Articulated Mounting Plate AMP-1 is a hinged plate that allows accessories to be mounted in locations that would have previously prevented access to various camera ports. The AMP-1 allows further adjustment up/down in relation to its attachment bracket. It is compatible with any accessory with a 1/4-20, 3/8-16 or M4 attachment point and is particularly suited to video transmitters and motor controllers.

Rod Mounting Bracket RMB-3 K2.0006186

The Rod Mounting Bracket RMB-3 is a great method to attach an accessory support rod virtually anywhere on the camera, often used to provide a rod for lens motors by mounting the RMB-3 onto one of the side brackets. The RMB-3 can also be used to support the Viewfinder Cross Pipe for mounting viewfinders.

Rod Mounting Bracket RMB-7 K2.0023907

The Rod Mounting Bracket RMB-7 provides support for a single 19 mm support rod (or 15 mm with reduction insert K2.66255.0). Often used with lens motors, the RMB-7 is optimized for ARRI TRINITY and TRINITY 2. The RMB-7 mounts to M4 threads spaced 20 mm apart. The RMB-7 can also be used to support the Viewfinder Cross Pipe for mounting viewfinders.

RMB-3 and RMB-7 fulfill the same purpose, except that RMB-7 has a low-profile design with a wing thumb screw underneath the rod holder, ensuring the ARRI ALEXA 35 with RMB-7 fits inside the ARRI Trinity.

24.2.4 Other Accessories

Rear Accessory Bracket RAB-2 K2.0034183

The Rear Accessory Bracket RAB-2 allows accessories to be mounted behind the ARRI ALEXA 35. This can be done for organizational reasons or to better balance the camera. The RAB-2's top attaches to the back side of the Top Extension Bracket TEB-1. The RAB-2's bottom attaches to the back side of the Balance Utility Dovetail BUD-1.

Vertical Format Baseplate K2.0042610

The Vertical Format baseplate allows shooting with the ARRI ALEXA 35 on its side for Portrait (“9:16”) and attaches to the right side of the ARRI ALEXA 35. It interfaces with Compact Bridge Plates, Bridge Plate Adapters, Shoulder Pads and the Stabilizer Adapter Mounts.

Vertical Top Plate K2.0043666

The Vertical Top Plate attaches to the left side of the ARRI ALEXA 35. It acts as a top plate to support the lightweight Camera Handle LCH-1.

Case for ALEXA Cameras K2.0040234

The Case for ARRI ALEXA 35 support the camera in various rigging configurations and has cut-outs that fits specific support accessories, recording media and media readers. The case features two large pockets for additional accessories.

24.3 Electronic Accessories

Audio Extension Module AEM-1 K2.0023750

The Audio Extension Module AEM-1 adds a high-quality audio interface and extra accessory power outputs to the ARRI ALEXA 35. Featuring two ultra-low noise microphone preamplifier channels, the AEM-1 mounts directly to the rear of the camera as an integrated electronic module. Selectable features include MIC/LINE input, 48V Phantom power, phase reversal, adjustable low-cut filter, gain and limiter. The AEM-1 also features an AES stereo digital audio input and a high-quality Headphone amplifier.

Power Distribution Module PDM-1 K2.0024101

The Power Distribution Module PDM-1 adds seven power outputs (4x 24 V, 2x 12 V, 1x 12 V Twist D-Tap) to the camera. Once attached, the PDM-1 is internally powered and there are no extra cables or brackets necessary, making it an elegant integrated accessory.

External Power Adapter EPA-1 K2.0034205

The EPA-1 allows a camera mounted to a stabilizer rig to be externally powered by a block battery instead of the stabilizer’s batteries during breaks in shooting. As the camera’s main PWR connector is usually occupied by the stabilizer power cable, the EPA-1 can be quickly attached to a B-Mount battery adapter to offer a second LEMO 8pin PWR connector.

24.4 Battery Adapters

B-Mount Battery Adapter K2.0023751

The B-Mount Battery Adapter attaches into the recessed area at the back of the camera, the Power Distribution Module PDM-1 or the Audio Extension Module AEM-1 and provides compatibility with any B-Mount battery.

Battery Adapter Back BAB-LF K2.0034204

The Battery Adapter Back BAB-LF attaches into the recessed area at the back of the ARRI ALEXA 35, the Power Distribution Module PDM-1 or the Audio Extension Module AEM-1 and offers an interface to alternative on-board battery systems originally intended to use with the ARRI ALEXA LF.

ALEXA 35 Components Overview

May 25 , 2022. This shows **new ARRI articles** for the ALEXA 35 and some **existing articles**. Cables are not shown.
(1) UAP-3 can also mount to the camera's bottom. But if the LWS-6 is then attached, the rods' distance to the camera's optical center is off.
(2) Remove the "Touch and Go 35" plate at the bottom of the BPA-6 before attaching BP-8 or BP-9.

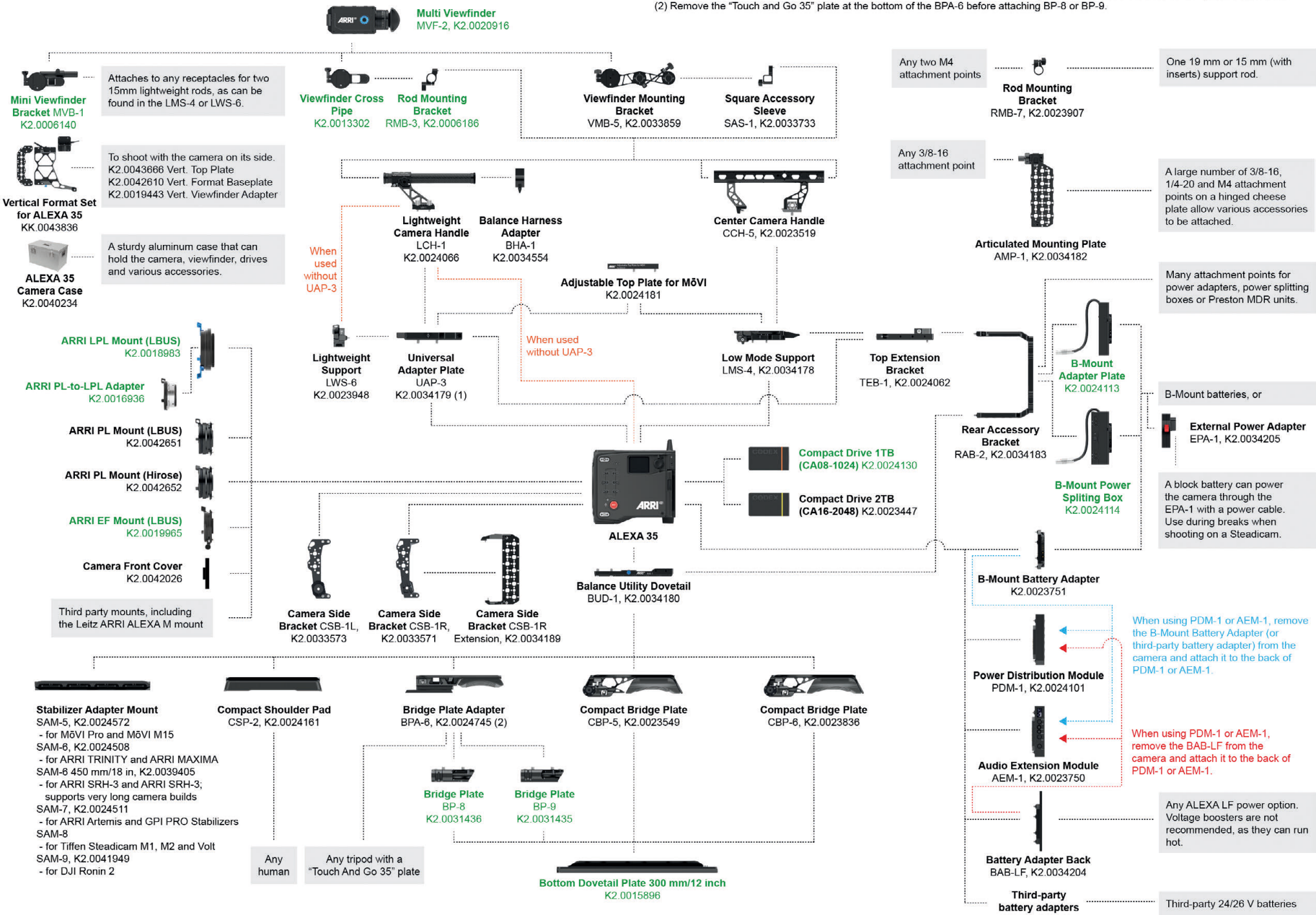

25 Appendix

25.1 Maximum Frame Rates by Sensor Mode, Recording Resolution and Codec

Sensor Mode	Recording Resolution	Recording Codec	Max. Sensor FPS			
			ALEXA 35 Xtreme (Standard / with Sensor Overdrive)		ALEXA 35	
			1 TB	2 TB	1 TB	2 TB
4.6K 3:2 Open Gate	4.6K (4608 x 3164)	ARRICORE ARRIRAW ProRes 422 HQ ProRes 4444 ProRes 4444 XQ	80 / 80 35 120 90 60	120 / 165 80 120 120 120	- 35 60 60 60	- 75 60 60 60
4.6K 16:9	4.6K (4608 x 2592	ARRICORE ARRIRAW ProRes 422 HQ ProRes 4444 ProRes 4444 XQ	100 / 110 45 150 110 70	150 / 200 95 150 150 140	- 45 - - -	- 75 - - -
	4K (4096 x 2304)	ProRes 422 HQ ProRes 4444 ProRes 4444 XQ	- - -	- - -	75 75 75	75 75 75
4K 16:9	4K (4096 x 2304)	ARRICORE ARRIRAW ProRes 422 HQ ProRes 4444 ProRes 4444 XQ	125 / 125 55 150 135 90	150 / 210 125 150 150 150	- 55 100 100 90	- 120 100 100 100
	UHD (3840 x 2160)	ProRes 422 HQ ProRes 4444 ProRes 4444 XQ	150 150 150	150 150 150	120 120 105	120 120 120
	2K (2048 x 1152)	ProRes 422 HQ ProRes 4444 ProRes 4444 XQ	150 150 150	150 150 150	120 120 120	120 120 120
	HD (1920 x 1080)	ProRes 422 HQ ProRes 4444 ProRes 4444 XQ	150 150 150	150 150 150	120 120 120	120 120 120
3.8K 16:9	UHD (3840 x 2160)	ARRICORE ARRIRAW ProRes 422 HQ ProRes 4444 ProRes 4444 XQ	145 / 145 65 150 150 105	150 / 240 140 150 150 150	- 65 120 120 105	- 120 120 120 120
3.8K 2.39:1	3.8K (3840 x 1608)	ARRICORE ARRIRAW ProRes 422 HQ ProRes 4444 ProRes 4444 XQ	195 85 240 210 140	240 190 240 240 240	- - - -	- - - -
3.3K 6:5	3.3K (3328 x 2790)	ARRICORE ARRIRAW ProRes 422 HQ ProRes 4444 ProRes 4444 XQ	120 / 125 55 120 120 90	120 / 210 120 120 120 120	- 55 75 75 75	- 100 75 75 75
	3.8K 2.39:1 Ana. 2x	ProRes 422 HQ ProRes 4444 ProRes 4444 XQ	120 120 120	120 120 120	90 90 90	90 90 90

Sensor Mode	Recording Resolution	Recording Codec	Max. Sensor FPS			
3K 1:1	3K (3072 x 3072)	ARRIRAW ProRes 422 HQ ProRes 4444 ProRes 4444 XQ	- - - -	- - - -	55 90 90 90	100 90 90 90
	3.8K 2:1 Ana. 2x	ProRes 422 HQ ProRes 4444 ProRes 4444 XQ	- - -	- - -	100 100 100	100 100 100
2.7K 8:9	UHD 16:9 Ana. 2x	ProRes 422 HQ ProRes 4444 ProRes 4444 XQ	- - -	- - -	100 100 100	100 100 100
2K 16:9 S16	2K (2048 x 1152)	ARRICORE ARRIRAW ProRes 422 HQ ProRes 4444 ProRes 4444 XQ	330 / 505 230 330 330 330	330 / 660 330 330 330 330	- - 120 120 120	- - 120 120 120
HD 16:9 S16	HD (1920 x 1080)	ARRICORE ARRIRAW ProRes 422 HQ ProRes 4444 ProRes 4444 XQ	330 / 590 260 330 330 330	330 / 660 330 330 330 330	- - - - -	- - - - -

25.2 Sensor Related Information

Single Frame Spots of Various Shape – also known as “Digital Dust” or “White Flecks”

Natural and / or artificial radiation may cause a “false exposure” on the image sensor. The shape of these spots may vary from dots to lines or other, sometimes irregular shapes. These spots occur in random locations of the image, last only for a single frame and are more visible in dark images. This is a principal issue of all image sensors and not a malfunction.

Flicker

Some light sources (i.e. discharge tubes or LEDs) may cause an interference with sensor exposure. This may result in image flickering or “bands” of different brightness moving up or down the image. Please note that at higher frame rates (100 fps in 50Hz countries, 120 fps in 60Hz countries) even tungsten light may flicker. A short recording and playback will show this flicker.

Rolling Shutter

Due to the rolling shutter design principle of the sensor the following effects can be observed in certain situations:

- Skewed/slanted vertical lines: fast panning or fast-moving objects may result in vertical structures to appear "skewed/slanted”. The intensity of the effect depends on the relative speed of panning / object.
- Partial exposure: very short light effects (i.e. a photographer’s flash or strobe light) may result in the upper part of the image showing the light effect whereas the lower part does not or vice versa.

“Black Sun”

Very bright lights (i.e. the sun, or a photographer’s flash) may result in a black/magenta spot.

Stuck Pixels at Long Exposure Times

At longer exposure times (longer than the standard 1/50th of a second), stuck pixels may become visible in darker image areas. The longer the exposure time the more pixels will be affected. When using exposure times longer than 1/24th of a second, carefully check your image whether the quality meets your requirements.

NOTICE

High Energy Light Sources

Permanent damage to the camera sensor and/or the viewfinder display.

- Do not point the camera sensor into direct sunlight, very bright light sources or high energy light sources (e.g. laser beams).
- Do not point the viewfinder eyepiece into direct sunlight, very bright light sources or high energy light sources (e.g. laser beams).

25.3 Companion Tools

ARRI maintains various tools to support your work with the ARRI ALEXA 35 on- and off-set.

ARRI Reference Tool

The ARRI Reference Tool (ART) combines the functionality of the ARRIRAW Converter, ARRI Color Tool, and ARRI Meta Extract. It supports all ALEXA 35 recording formats and allows the creation of ALF4 look files, conversion to SDR and HDR color spaces with looks applied, and export to Apple ProRes, OpenEXR and TIFF files.

ARRI Reference Tool

Camera Simulators

The camera simulator is an interactive learning tool to familiarize yourself with the menu navigation of ARRI digital cameras. Get started now and learn first-hand the simple, straightforward menu system that only ARRI digital cameras offer.

Camera Simulators

Formats and Data Rate Calculator

The ARRI Formats and Data Rate Calculator (FDRC) is an online tool that calculates the record durations and data rates for different camera settings (combinations of camera model, codec, resolution, project rate, sensor speed, recording media, audio on/off). It also gives deeper insight into available recording formats and camera modes.

Formats & Data Rate Calculator

Frame Line & Lens Illumination Tool

The Frame Line & Lens Illumination Tool can be used for creating custom frame lines for ARRI cameras and for checking how different lenses illuminate different ARRI sensor sizes, recording formats, target aspect ratios and framelines.

Frame Line & Lens Illumination Tool

Matte Box Checker

Use the Matte Box Checker to quickly find ARRI matte boxes that are compatible with your chosen lens and sensor mode and avoid optical vignetting.

Matte Box Checker

25.4 Connector Pinouts

PWR

Lemo EEJ.2B.308

Pin 1	Batcom
Pin 2	Power GND
Pin 3	Power GND
Pin 4	Power GND
Pin 5	Batcom GND
Pin 6	BAT +
Pin 7	BAT +
Pin 8	BAT +

Pin orientation as seen by the user.

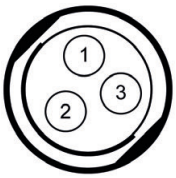

RS

Fischer DBP102A052-130

Pin 1	GND
Pin 2	+ 24 V Aux
Pin 3	R/S

Pin orientation as seen by the user.

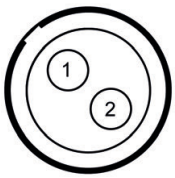

12 V Accessory Power Out

Lemo EEG.0B.302.CLN.A365

Pin 1	GND
Pin 2	+ 12 V Aux

Pin orientation as seen by the user.

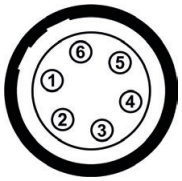

AUDIO

Lemo EEA.0B.306.CLN

Pin 1	GND
Pin 2	CH 1 (+)
Pin 3	CH 1 (-)
Pin 4	CH 2 (+)
Pin 5	CH 2 (-)
Pin 6	+ 12 V

Pin orientation as seen by the user.

TC

Lemo EEG.0B.305

Pin 1	GND
Pin 2	LTC In
Pin 3	Aux
Pin 4	Aux
Pin 5	LTC Out

Pin orientation as seen by the user.

ETH

Lemo EEG.1B.310

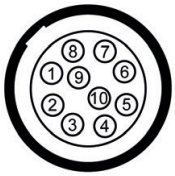

Pin 1	MX-1P (white-orange)
Pin 2	MX-1N (orange)
Pin 3	MX-2P (white-green)
Pin 4	MX-2N (green)
Pin 5	MX-3P (blue)
Pin 6	MX-3N (white-blue)
Pin 7	MX-4P (white-brown)
Pin 8	MX-4N (brown)
Pin 9	GND
Pin 10	24 V - ETH

Pin orientation as seen by the user.

LBUS

Lemo EEG.0B.304

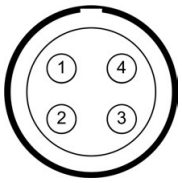

Pin 1	GND
Pin 2	Can L
Pin 3	VBat
Pin 4	Can H

Pin orientation as seen by the user.

SERIAL

Lemo EEC.0B.304.CLN

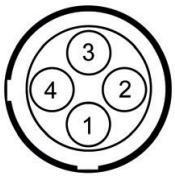

Pin 1	RX/B
Pin 2	+ 12 V
Pin 3	TX/A
Pin 4	GND

Pin orientation as seen by the user.

Ethernet

RJ45

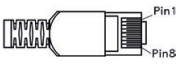

Pin 1	White-orange
Pin 2	Orange
Pin 3	White-green
Pin 4	Blue
Pin 5	White-Blue
Pin 6	Green
Pin 7	White-Brown
Pin 8	Brown

Headphones Out (on MVF-2)

Stereo Jack

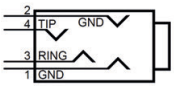

Pin 1	GND
Pin 2	GND
Pin 3	R Out
Pin 4	L Out

Audio Cable K2.0023988

ARRI offers an ALEXA Mini LF / ALEXA 35 / ALEXA 265 audio cable with a matching connector (Lemo EEJ.2B.308) to create audio adapters. The following table shows the wire assignments of this cable.

Wire	Function
Black	GND
Blue	CH 1 (+)
Brown	CH 1 (-)
Yellow	CH 2 (+)
Green	CH 2 (-)
Red	+ 12 V

25.5 Dimensional Drawings

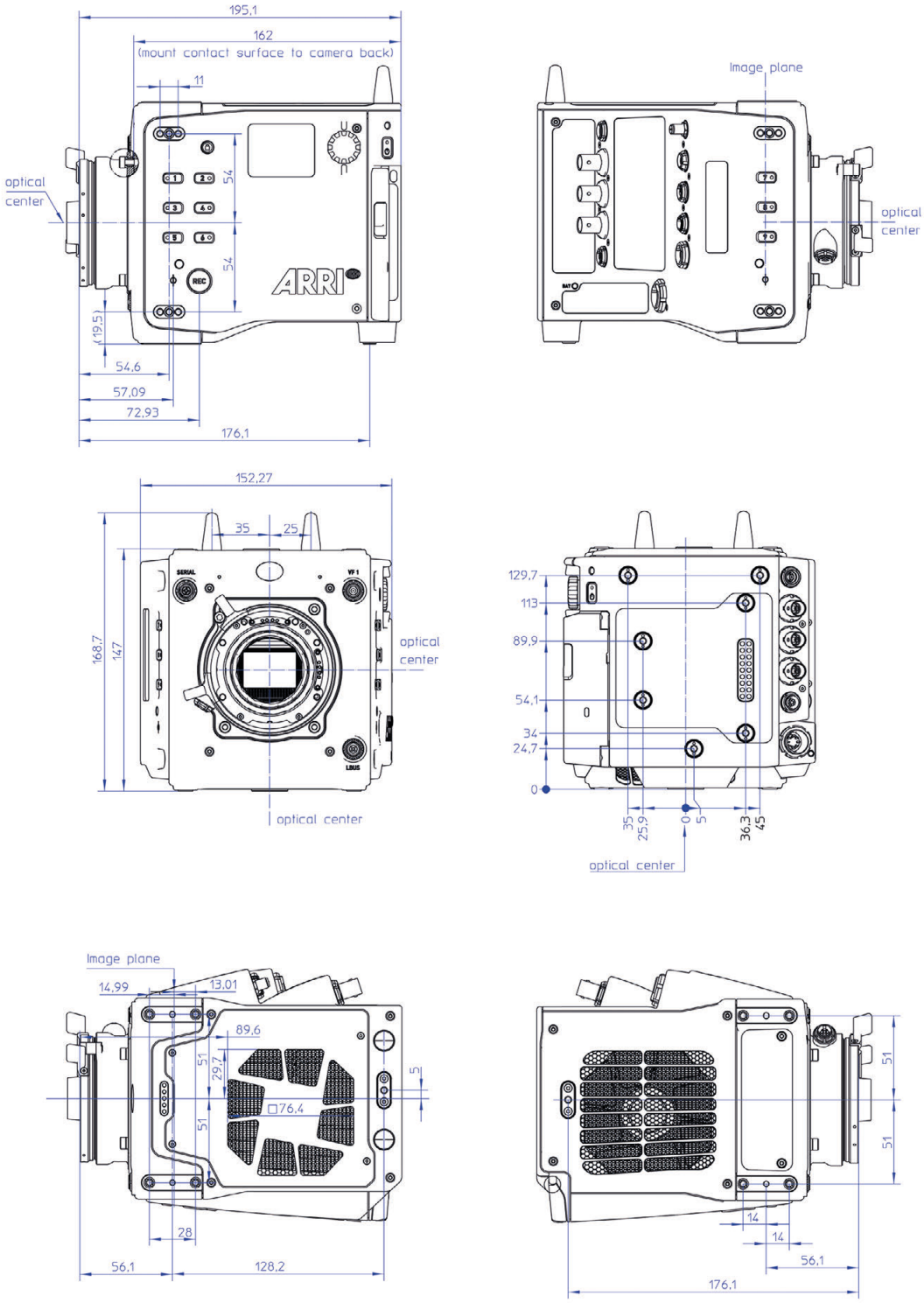

ALEXA 35 with LPL Mount (LBUS). All dimensions in mm. Not to scale.

ALEXA 35 XTREME