Tech – Info

Videotop (Steadicam™) for the ARRIFLEX 535B with the IVS

A new Steadicam™ adapter is now available for the ARRIFLEX 535 B, which makes the IVS usable in Steadicam™ applications. The advantages are a compact design and the best possible image quality for the video assist. An optical system specially designed for the IVS ensures that 100 % of all light in the viewfinder assembly is projected onto the video chip. This ensures an extraordinary bright and clear image is on the video monitor. The impressive image quality and all other advantages of the IVS, e. g. the electronic frame lines and the camera status line are now also available for Steadicam™ applications. As an option it is possible to mount a support rod system for holding lens accessories.

If your ARRIFLEX 535 B is already equipped with a complete IVS, you need to order the following parts:





Videotop IVS, K2.47363.0

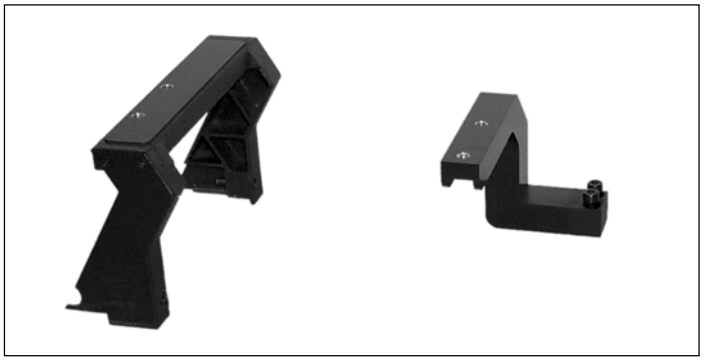

Low mode support, K2.47364.0

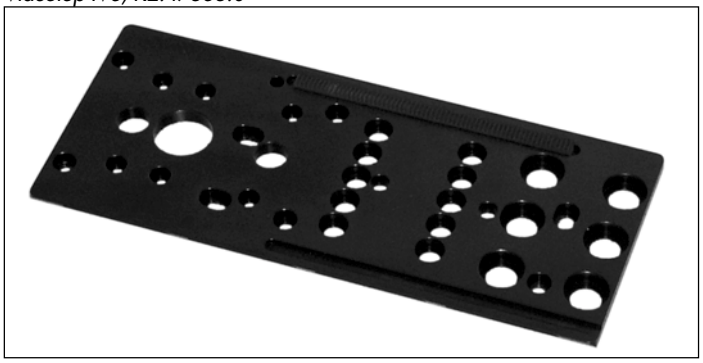

Plate for low mode support, K4.47551.0



alternatively: Low mode support, K4.48073.0

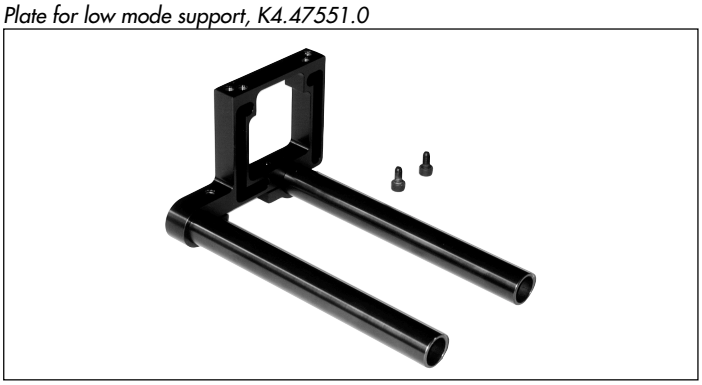

Support rod system K2.47369.0

Videotop IVS 535B	K2.47363.0
Low Mode-Support	K2.47364.0
Plate for Low Mode Support	K4.47551.0
Support Rod System	K2.47369.0

For customers who already have the previous version of the low mode support K2.47194.0, it is possible to order only the new front bracket K4.48073.0 as a spare part, as the back end bracket is identical.

Reference
Instruction Manual IVS

Status
July 2000

Further Information
For further information please contact your nearest ARRI dealer or one of our subsidiaries:

Germany ..... Arnold & Richter Cine Technik
Türkenstraße 89
D-80799 München
phone: (089) 3809-0
fax: (089) 3809-1244
fax service: (089) 3809-1793
E-mail service: KDenk@arri.de

USA..... ARRI USA
617, Route 303
Blauvelt, New York 10913
phone: (914) 353 14 00
fax: (914) 425 12 50
E-mail: arriflex@arri.com

ARRI USA
600 North Victory Blvd.
Burbank, California 91502
phone: (818) 841 70 70
fax: (818) 848 40 28
E-mail: arriflex@arri.com

GB..... ARRI (GB) Ltd.
The Movie House
1-3 Airlinks, Spitfire Way
phone: (0208) 848 88 81
fax: (0208) 561 13 12
E-mail: sales@arri-gb.com

Italy ..... ARRI ITALIA S.R.L.
Viale Edison 318
20099 Sesto S. Giovanni (Milano)
phone: (02) 26 22 71 75
fax: (02) 242 16 92
E-mail: info@arri.it

ARRI ITALIA S.R.L.
Via Placanica, 97
00040 Morena (Roma)
phone: (06) 79 89 02 02
fax: (06) 79 89 02 39

Canada ..... ARRI Canada Ltd.
415 Horner Avenue, Unit 11
Etobicoke, Ontario
Canada M8W 4W3
phone: (416) 255 33 35
fax: (416) 255 33 99
E-mail: service@arrican.com