Schutzvermerk nach DIN34 beachten

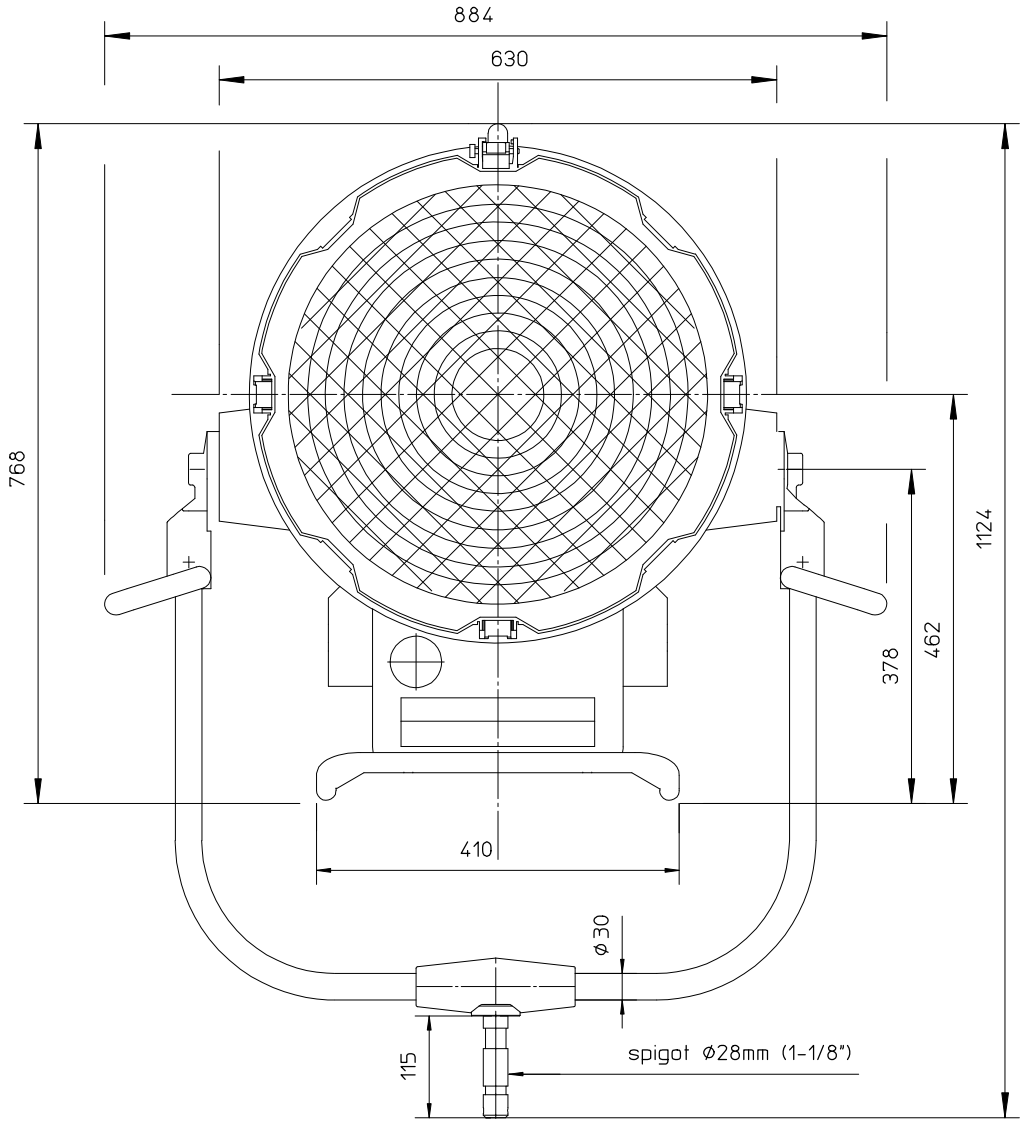

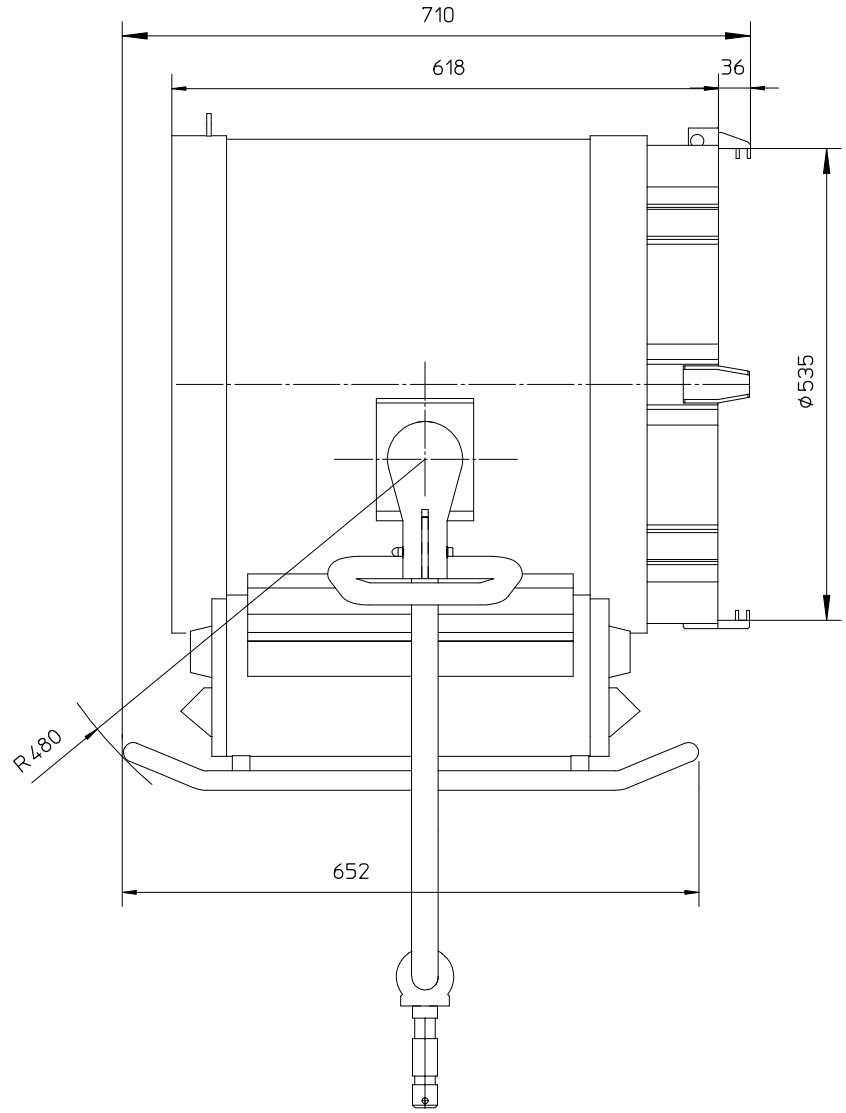

Scheinwerfertyp type of lamphead	Compact 12000	Linsen lenses	∅ 500 mm ∅ 19.6 "	Packmass packed size	1170x1050x1135 mm 46.06x41.33x44.68 "	Gewicht net weight	47,2 kg 104.1 lbs	ARRI Arnold & Richter Cine Technik Pulvermuehle D-83071 Stephanskirchen
Leuchtmittel lamp	HMI 12000W/SE	Zubehoer accessories	∅ 535 mm ∅ 21 "	Packvolumen packed volume	1394.34 l 49.240 ft3	Dateiname file name	c12000b_mb_02	
Lampensockel lamp base	G38	Fluegeltor barndoor	∅ 535 mm ∅ 21 "	Packgewicht packed weight	59 kg 130.07 lbs	Version / Stand version / as at...	1.1/11.07.06	