Schutzvermerk nach DIN34 beachten

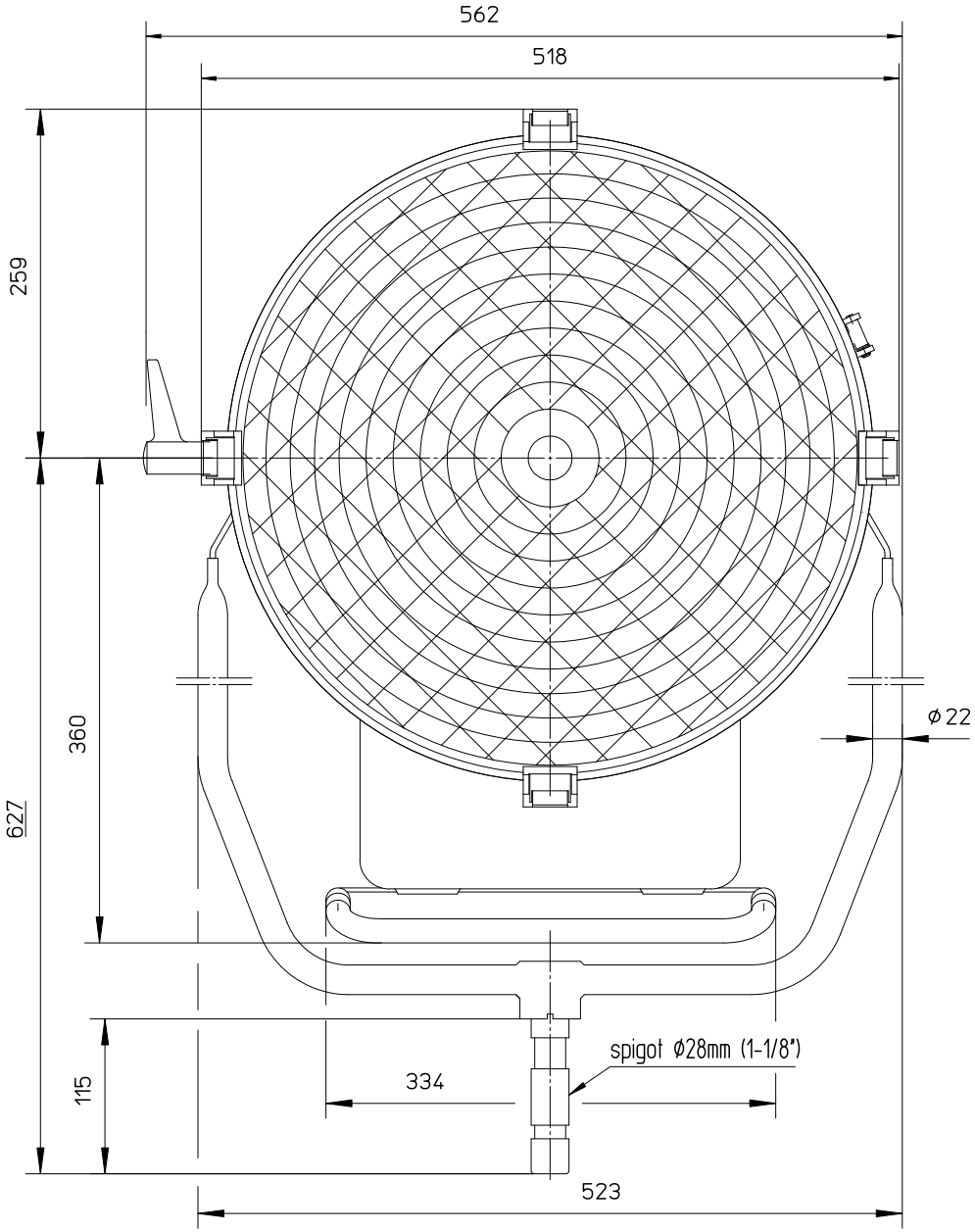

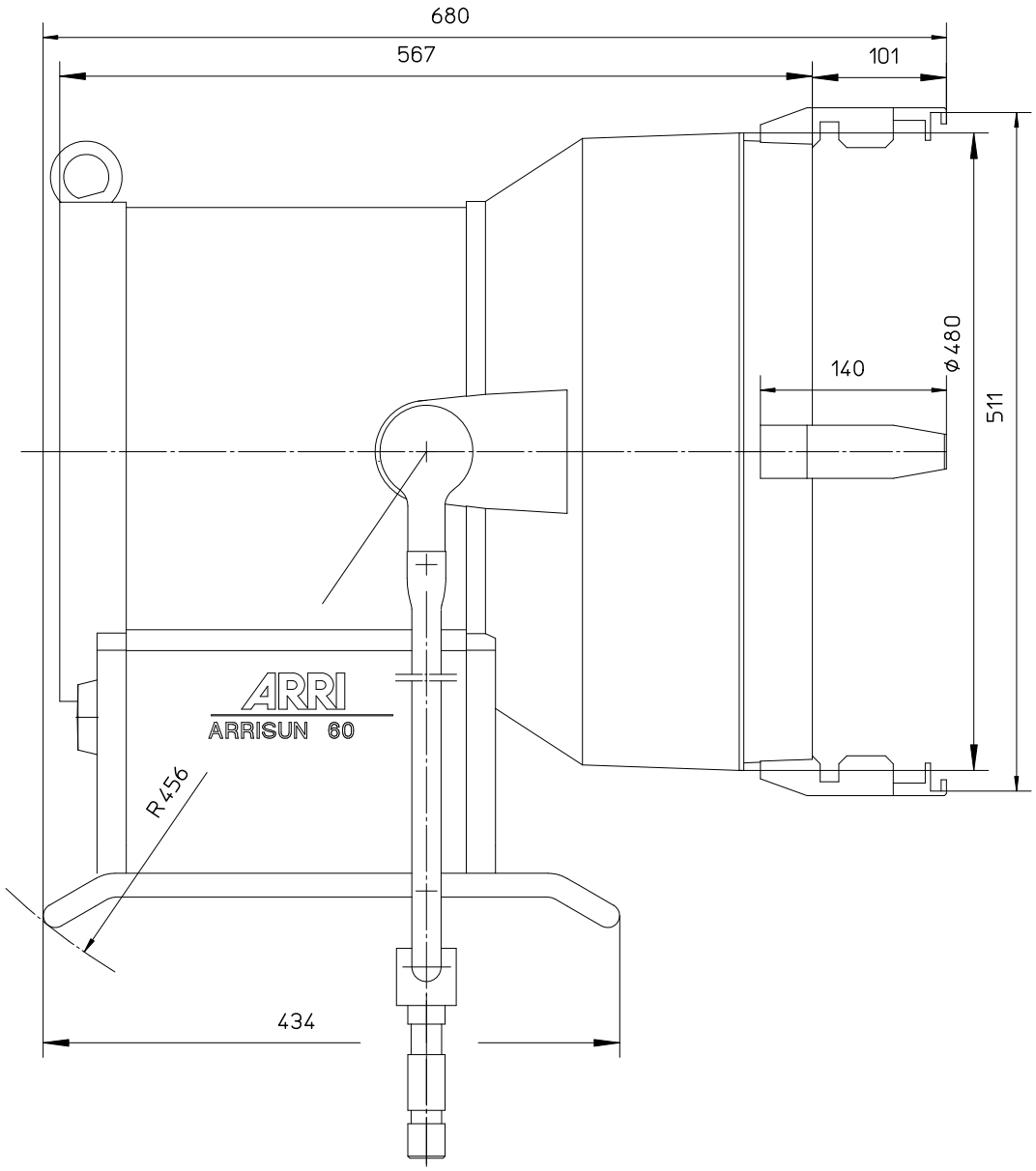

Scheinwerfertyp type of lamphead	ARRISUN 60	Linsen lenses	Ø 420 mm Ø 16.5 "	Packmass packed size	700x720x780 mm 27.56x28.35x30.71 "	Gewicht net weight	27 kg 59.53 lbs	ARRI	
Leuchtmittel lamp	HMI 6000W/SE	Zubehoer accessories	Ø 500 mm Ø 19.7 "	Packvolumen packed volume	393.12 l 13.883 ft3	Dateiname file name	as60_mb_04		
Lampensockel lamp base	G38	Fluegeltor barndoor	Ø 510 mm Ø 20.1 "	Packgewicht packed weight	32.5 kg 71.66 lbs	Version / Stand version / as at...	1.3/16.02.11	Arnold & Richter Cine Technik Pulvermuehle D-83071 Stephanskirchen	