Schutzvermerk nach DIN34 beachten

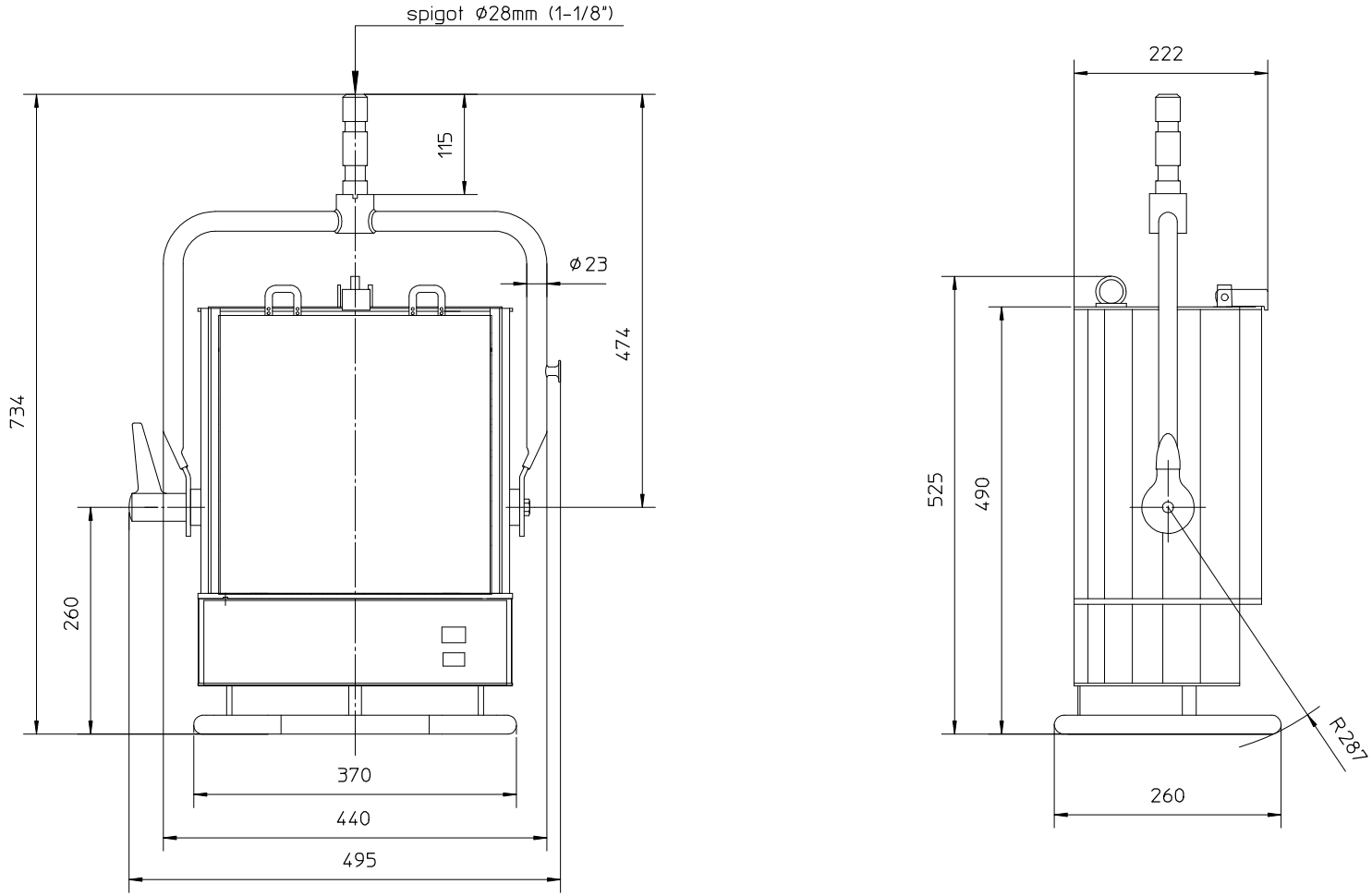

Scheinwerfertyp type of lamphead	ARRI X12	Frontscheibe front screen	315x330mm 12.4x13.0 "	Packmass packed size	670x610x620 mm 26.38x24.02x24.41 "	Gewicht net weight	14,7 kg 32.3 lbs	ARRI Arnold & Richter Cine Technik Pulvermuehle D-83071 Stephanskirchen
Leuchtmittel lamp	HMI 1200W/SE	Zubehoer accessories	343 mm 13.5 "	Packvolumen packed volume	253.39 l 8.949 ft3	Dateiname file name	x12_mb_2	
Lampensockel lamp base	G38	Fluegeltor barndoor	343 mm 13.5 "	Packgewicht packed weight	19.5 kg 43 lbs	Version / Stand version / as at...	1.1/10.07.06	