Schutzvermerk nach DIN34 beachten

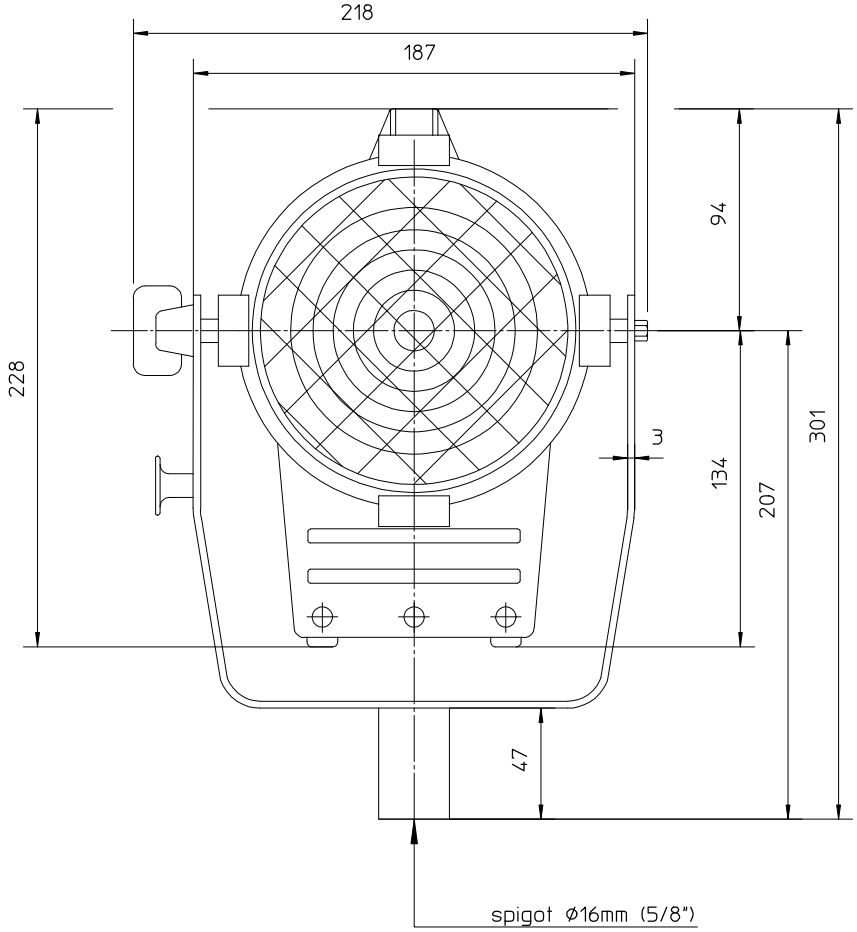

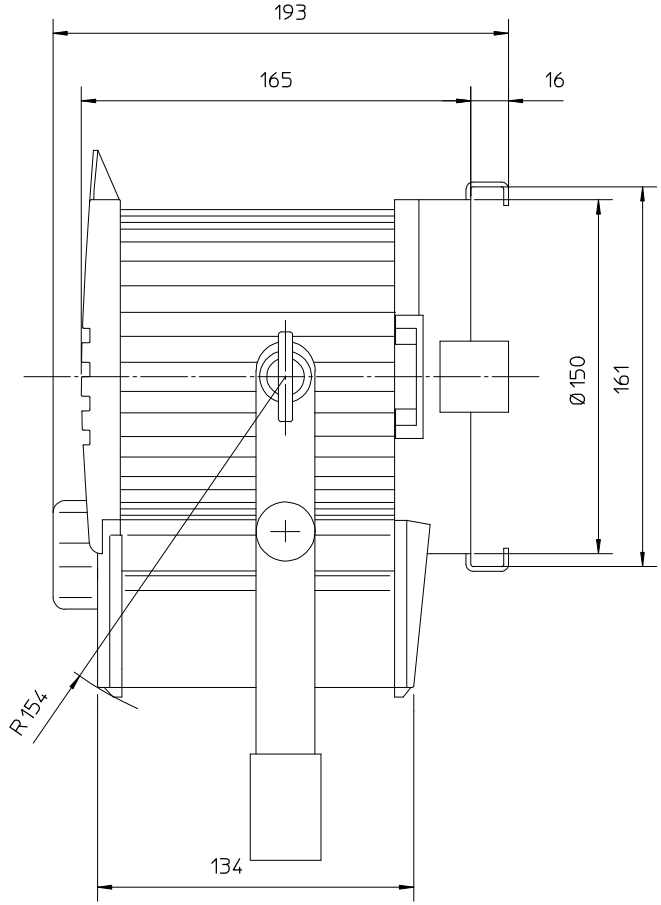

Scheinwerfertyp type of lamphead	Compact 200W	Linsen lenses	Ø 112 mm Ø 4.4 "	Packmass packed size	290x260x360 mm 11.42x10.24x14.17 "	Gewicht net weight	2.3 kg 5,1 lbs	ARRI Arnold & Richter Cine Technik Pulvermuehle D-83071 Stephanskirchen
Leuchtmittel lamp	HMI 200W/SE	Zubehoer accessories	Ø 168 mm Ø 6.6 "	Packvolumen packed volume	27.14 l 0.959 ft3	Dateiname file name	c200_mb_02	
Lampensockel lamp base	GZY9.5	Fluegeltor barndoor	Ø 168 mm Ø 6.6 "	Packgewicht packed weight	3.1 kg 6.83 lbs	Version / Stand version / as at...	1.1/04.07.06	