Schutzvermerk nach DIN34 beachten

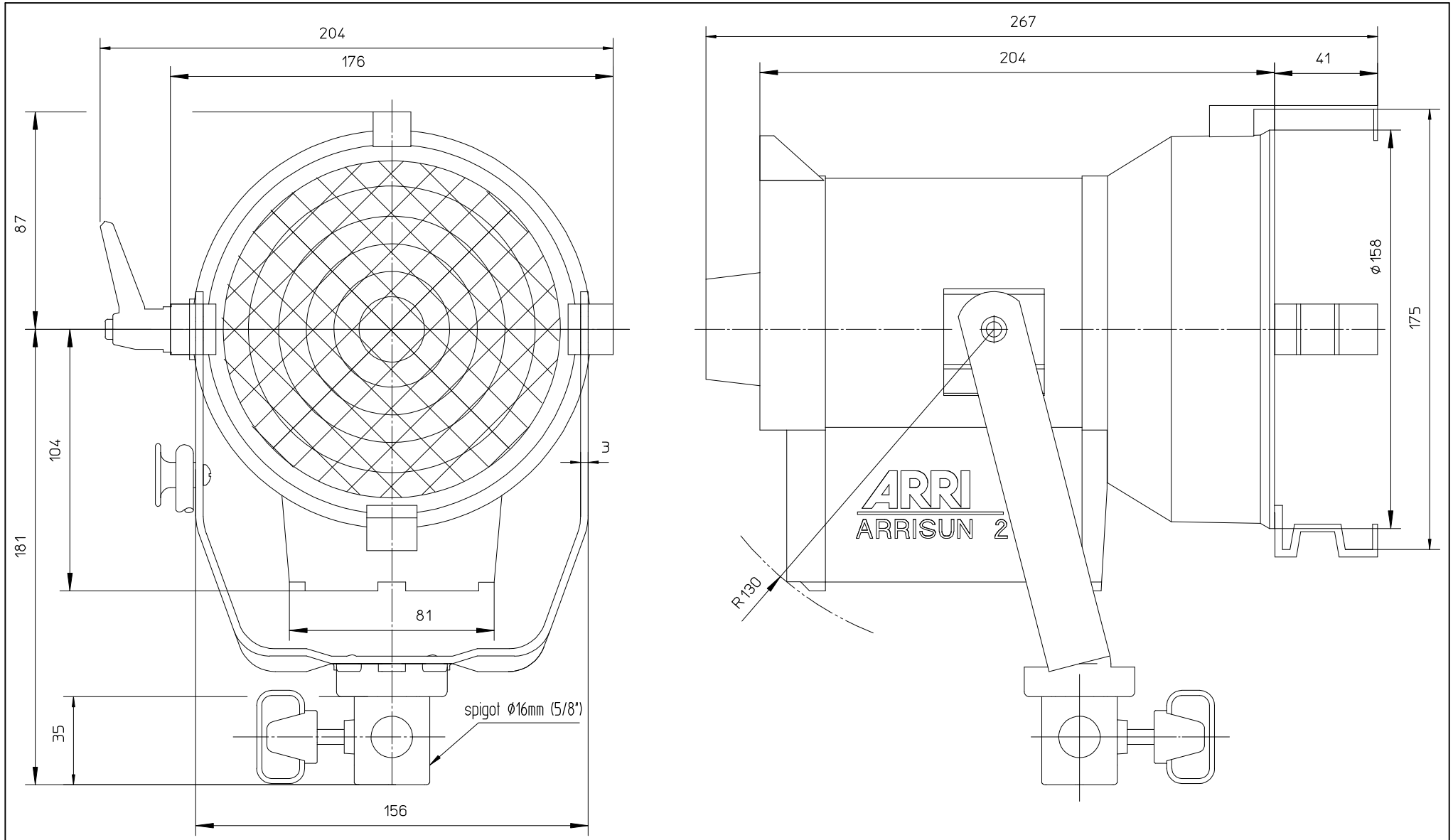

Scheinwerfertyp type of lamphead	ARRISUN 2	Linsen lenses	∅ 135 mm ∅ 5.3 "	Packmass packed size	260x220x300 mm 10.24x8.66x11.81 "	Gewicht net weight	2.3 kg 5,0 lbs	ARRI Arnold & Richter Cine Technik Pulvermuehle D-83071 Stephanskirchen
Leuchtmittel lamp	HMI 200W/SE	Zubehoer accessories	∅ 170 mm ∅ 6.7 "	Packvolumen packed volume	17.16 l 0.606 ft3	Dateiname file name	as2_mb_03	
Lampensockel lamp base	GZY9.5	Fluegeltor barndoor	∅ 160 mm ∅ 6.3 "	Packgewicht packed weight	3.2 kg 7.05 lbs	Version / Stand version / as at...	1.2/03.07.06	